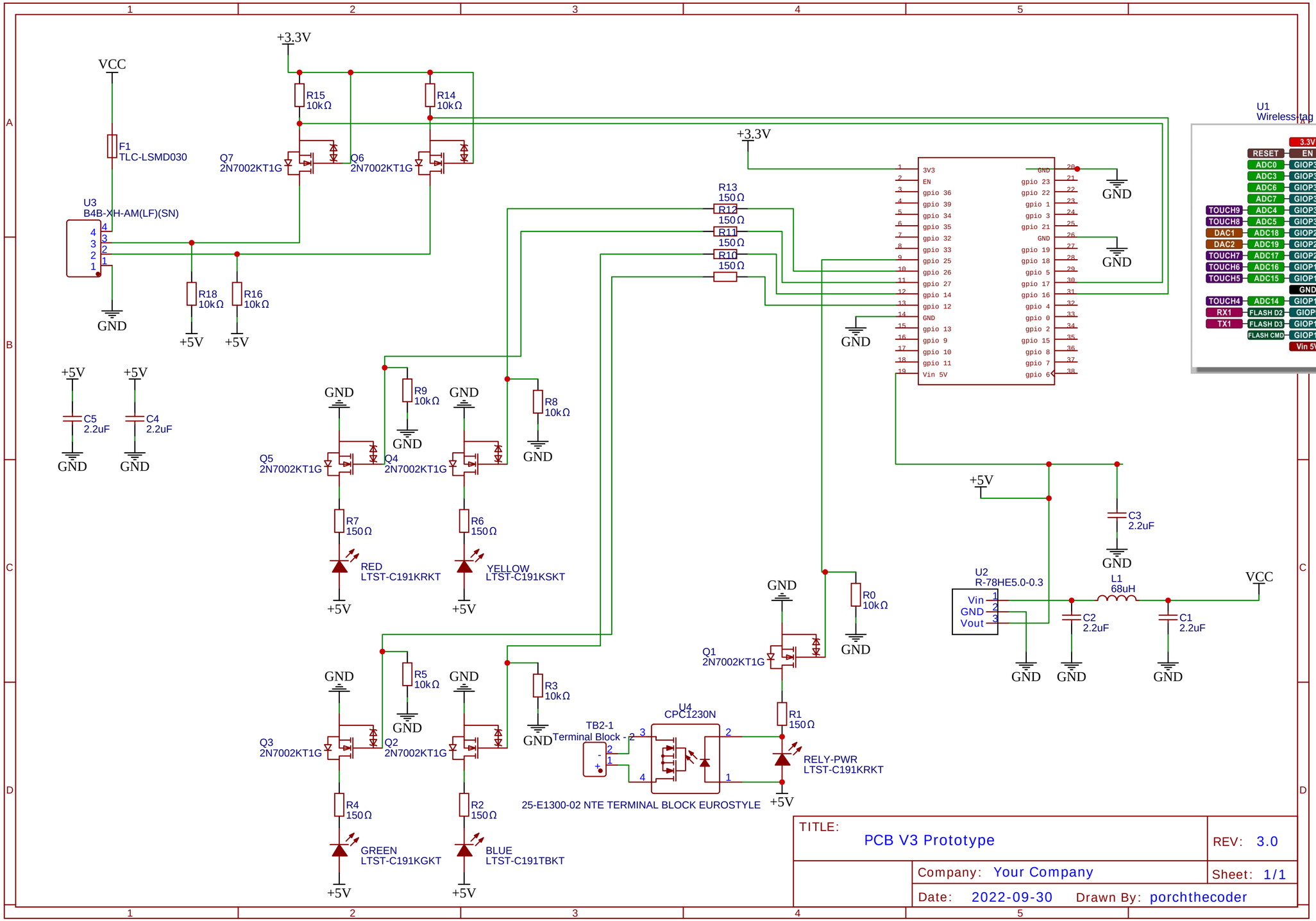

TITLE: PCB V3 Prototype	REV: 3.0
Company: Your Company	Sheet: 1/1
Date: 2022-09-30	Drawn By: porchthecoder