Year 1 Robotics Challenge Kick-off Meeting

Igor Gaponov

27 April, 2026

MEng Robotics and Artificial Intelligence
Department of Computer Science

Team Selection

Submit your preference via MS Forms

Each team comprises four students. Team members are selected randomly based on their favourite roles.

Please pick yours if you haven't done so yet.

Schedule

Week of Term	Monday	Tuesday	Wednesday	Thursday	Friday
1 (27 April-3 May)	**Kick-off Event**	Lab	Lab	Lab	
2 (04-10 May)	**Bank Holiday**	Lab	Lab	Lab	
3 (11-17 May)		Lab	Lab	Trial runs #1	Interim report **May 15, 4 PM**
4 (18-24 May)		Lab	Lab	Lab	
5 (25-31 May)	**Bank Holiday**	Lab	Lab	Lab	
6 (1-7 June)		Trial runs #2 **June 2**	Lab	Finals day **June 4**	Final report **June 5, 4 PM**

Meet the Team: TAs

Our wonderful RAI students, in alphabetical order:

Andrew

Artemis aka
'Atomic High-Five'

Helitha

Makarim aka
'LinkedIn Gold'

Peter

Tara aka 'What in the world is this?!'

Yusuf aka 'Really???!'

Meet the Team: MEng RAI Academics

Daniel Tozadore

Yunda Yan

Amir Patel

Pian Yu

Ziwen Lu

Thomas Thuruthel

Wei Chen

Igor Gaponov

Rules

1. All teams will operate under equitable conditions concerning access to support, consultation, facilities, and equipment provided at the Innovation Lab (referred to as **the "Fair Play" rule**).

2.Teams are permitted to use **all manufacturing equipment**, **tools**, **electronic components**, **and sensors available at the Innovation Lab** throughout the Challenge.

3.Projects must be executed using the manufacturing equipment accessible at the Innovation Lab, encompassing laser cutters, 3D printers, hand tools, electronics testing equipment, computers, among others. **Using external assistance** such as manufacturing services, custom materials from outside the Lab, paid CAD services, etc., **is prohibited** as this contravenes the Fair Play rule.

Robot Requirements

All robots must:

- Have two “**kill switches**”: hardware (button on top) and ‘software’ one (over Wi-fi)
- Have **sensors** to detect lines on the ground and distance to the walls.
- Be capable of being powered by a **battery** as well as a stationary **power supply**.
- **Soldered boards and PCBs** (no breadboard robots will be allowed in the finals).
- Have **tidy wiring and cable management** (robots with ‘hanging’ components won’t be allowed)

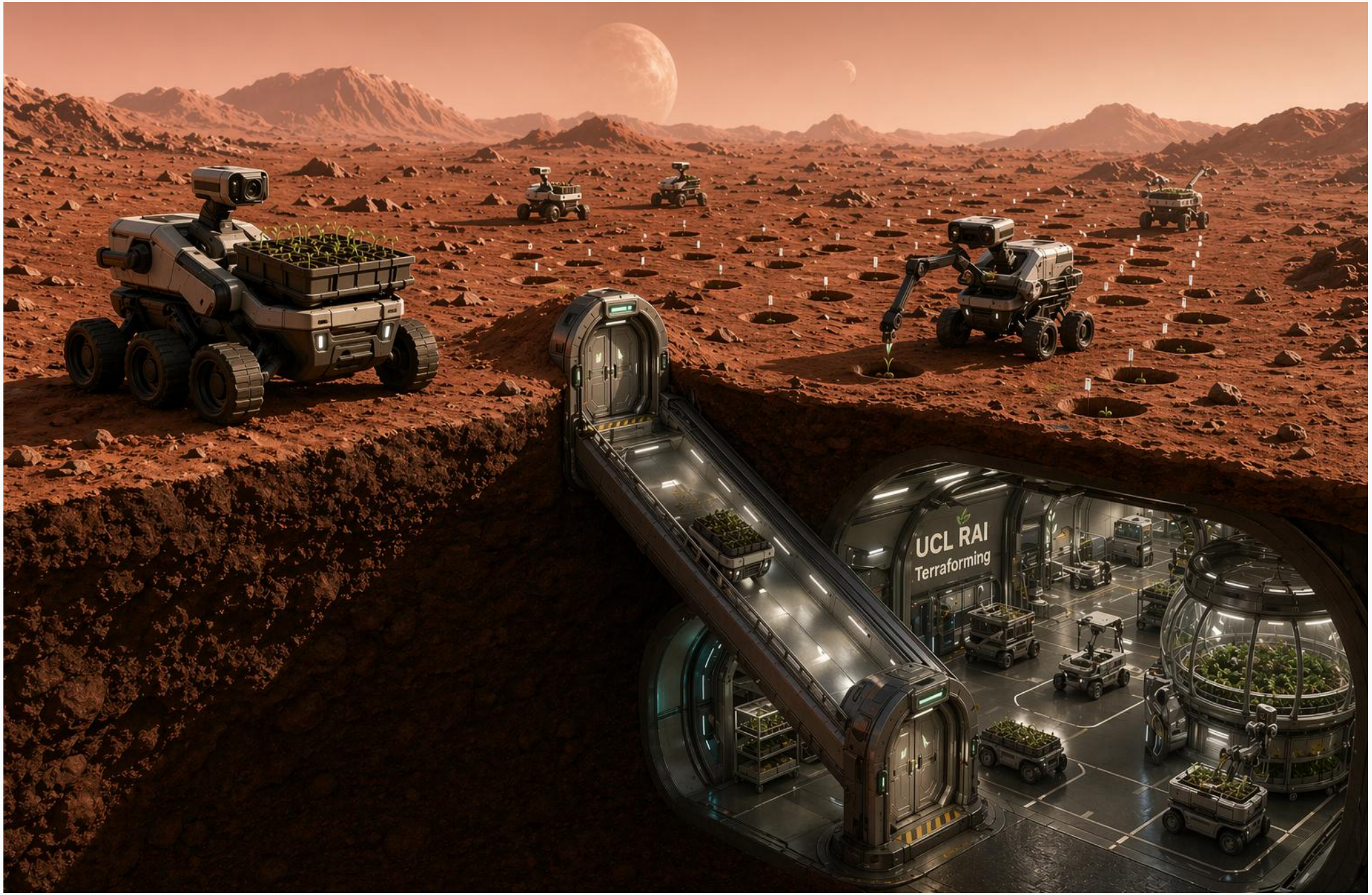
UCL RAI
Terraforming

Extraterrestrial Exploration

Leading space agencies (NASA, European Space Agency, China National Space Administration, Japan Aerospace Exploration Agency) actively fund or solicit concepts for **extraterrestrial bases** (on the Moon, Mars, and beyond).

The main features of most these bases are:

- **Protective** habitat (often underground, under regolith lava tubes)
- **Robotics and autonomy**
- Developed **communication and navigation** infrastructure
- **Power generation** and energy storage
- Life support and **food production**

Legend

In the not-so-distant year of 2046, the world's most valued (and hyped!) company called **UCL RAI Terraforming Initiative** sends 14 autonomous robots to another planet to finalise its preparation for the first human inhabitants.

- A cosy, underground **base** has been already built and prepared to for use by your robots. It has WiFi, floor markings and power!
- Soil fertility outside the base has been **sampled at regular intervals** and data stored at the base (local) server.
- The surface outside the base has been **explored and partially marked** to help navigation and localisation by a scouting robot party (who unfortunately have all perished under harsh surface conditions **before completing their marking job fully**).

Missions

Your robots will need to perform **exploration and 'terraforming'**.

Main robots' missions include:

- Area **exploration** outside the base
- **Planting** seeds at selected locations
- In case of **emergency** (solar flair) robots must be able to **return to base** immediately.

Additional missions:

- Detect the **most brightly lit** areas on the surface (*for solar panels*)
- **Recover other robots** stranded on the surface.

Challenge Layout

Two main areas:

- ‘Underground’ **base**
- Terraforming **area** (main gameplay space)

These are connected by two **ramped tunnels** (one to exit, another to enter base).

Each tunnel (‘airlock’) has **two sets of doors**.

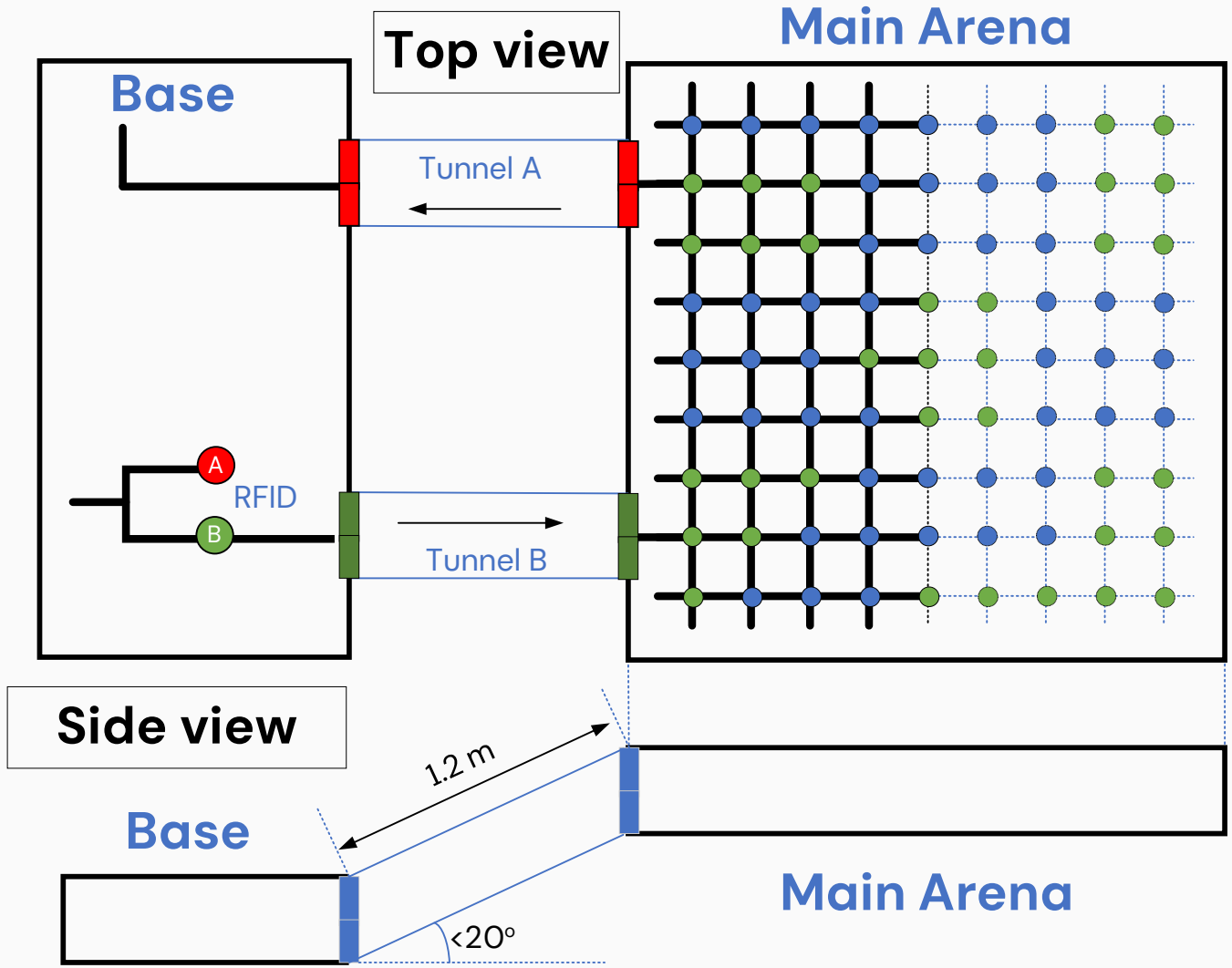

Base

Dimensions: 1.2 x 2.4 m.

Line following:

- From the robot deployment area ("Start") to the exit doors (Tunnel B).
- From the entrance (via Tunnel A) to the robot collection area ("Parking")

Robots can be introduced to and collected from the respective areas manually.

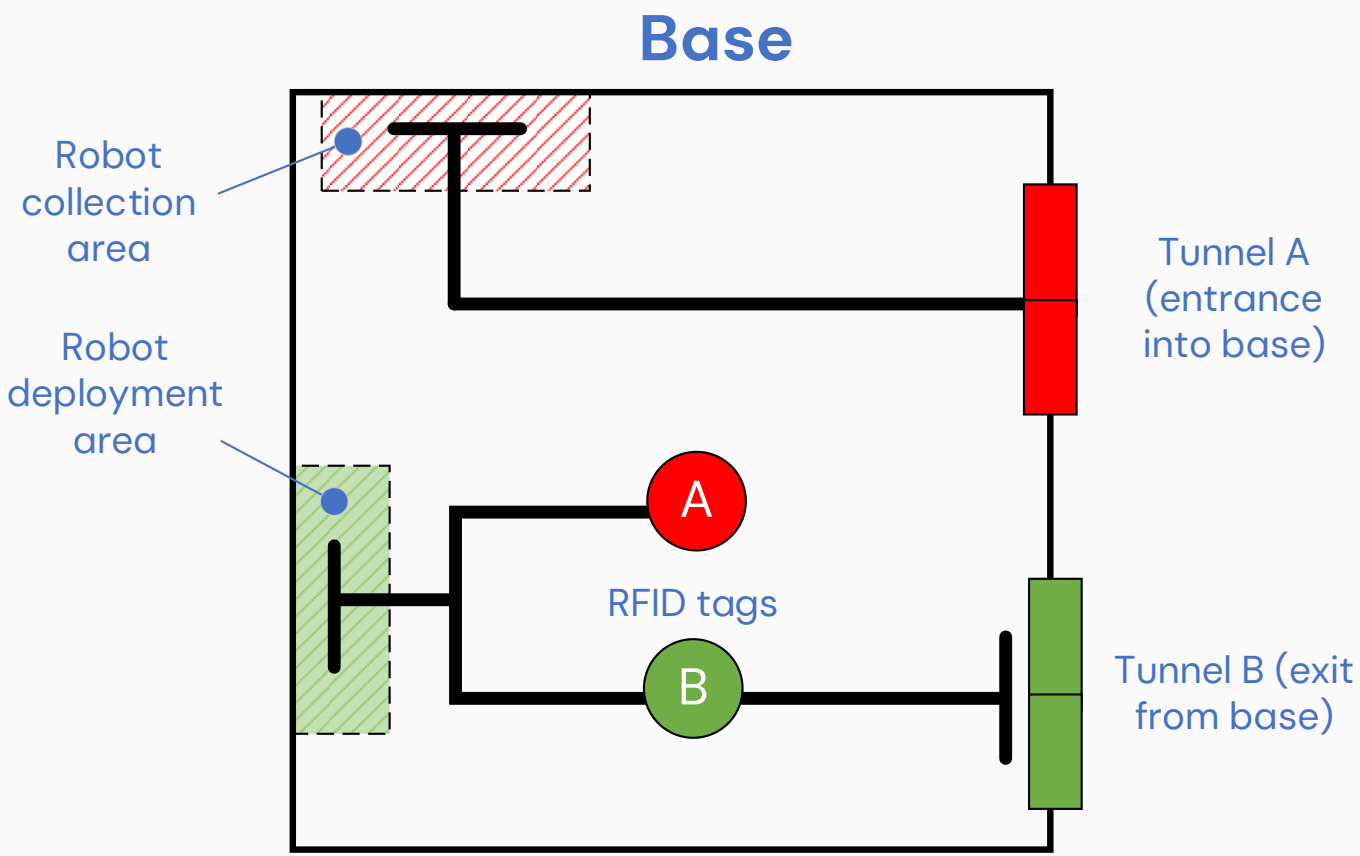

Main Arena ('Surface')

Dimensions: 2.5 x 2.5 m.
The arena has a **9x9 grid of RFID tags** with **unique IDs** planted under holes in the surface. Each tag stores the vertex coordinates (e.g. A1, D5, ..., I9).

- Upon finding a tag, robots can **request its status** (*fertile/infertile*) from the server via WiFi for planting.
- Half of the arena has **solid lines** connecting the holes to support line following.
- The other half **only has holes** (no lines) on it, spaced out at the same distance as on the left half.

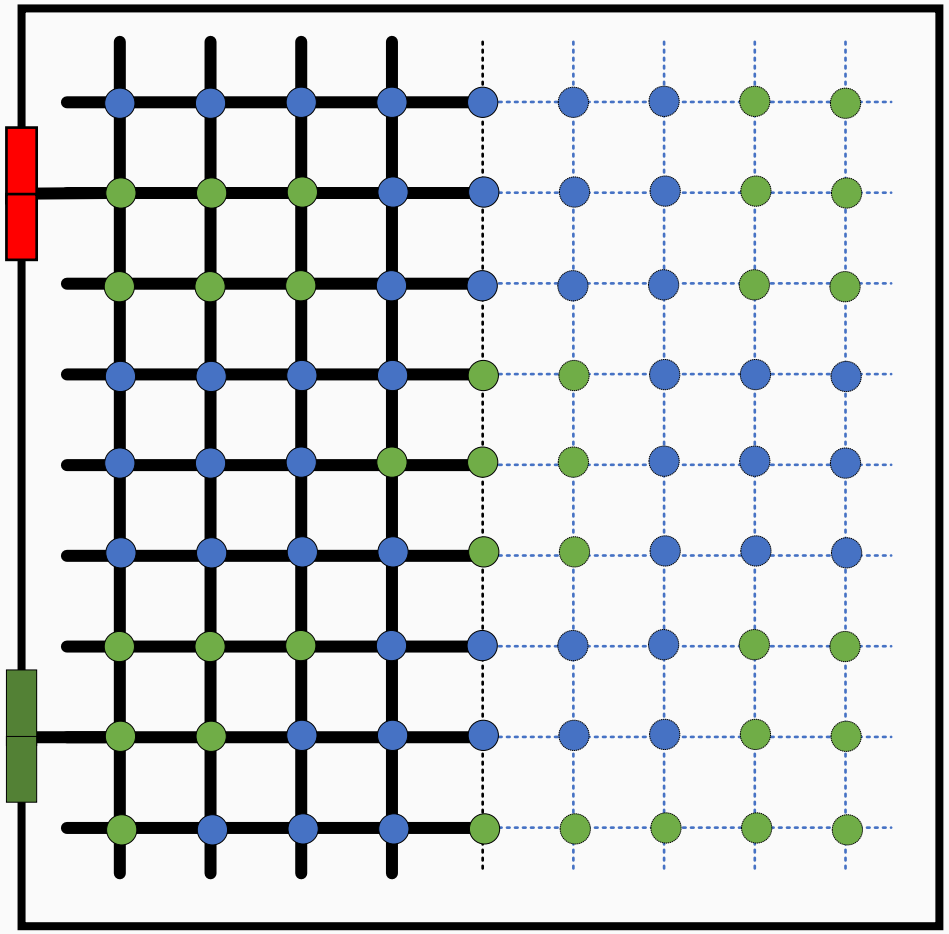

Airlocks: Exiting the Base

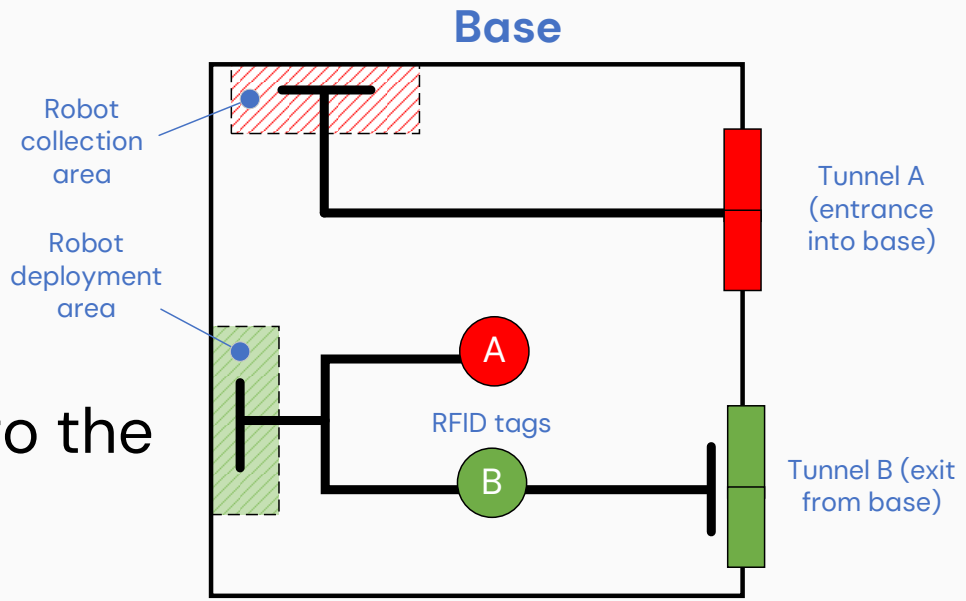

Procedure to **exit** the base is as follows:

- Robot navigates from the starting area to the 'B' RFID tag. It serves as an indicator.
- The robot communicates the tag's ID to the server. If correct, the robot receives exit clearance.
- Robot follows the line to detect the door and stops in front of it.
- Sensors in front of the door detect the robot, the door opens.
- Once the robot enters the tunnel successfully, the base-side door closes behind the robot, and the other door (surface-side) opens.
- Once the robot exits the door, it closes after several seconds.

Airlocks: Entering the Base

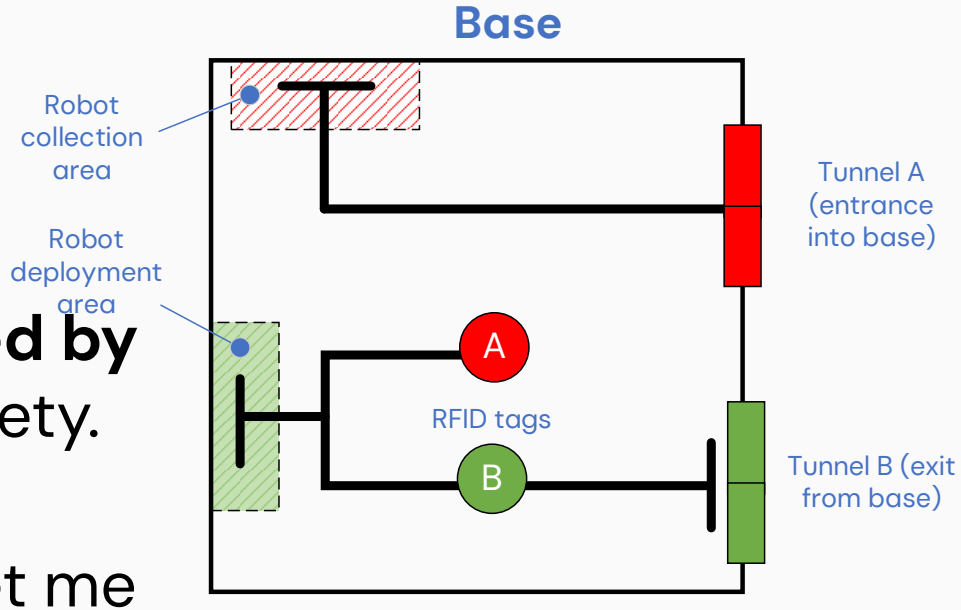

Robots entering the base must be **admitted by another robot** from within the base for safety.

- Robot approaches the arena side of the Airlock A. It then communicates a 'Let me in' message and its ID to the server.
- If the entering robot is recognized, **another robot inside the base** drives over the RFID tag 'A'. This opens the surface door of Airlock A.
- Once the robot fully enters Airlock A from the arena, a sensor detects this. If the sensor remains clear for 5 seconds, the door closes.
- The entrance into the base opens after the surface door is closed.

Rules and Gameplay: General

One robot per team. **Dimensions are capped** (20x20x15) and will be checked before the competition.

- Each robot can only spend a **limited time** inside the arena (*'battery capacity'; e.g. 5 min*) and has a cap on **number of tries** (two attempts)
- Upon returning to the base, robot is on **a timeout** (*'battery charging'; e.g. 5 min*)
- If the robot fails to return to base before its timer runs out, it is considered **stranded** and is disabled by a 'WiFi kill switch'
- Stranded robots **can be 'revived'** by other robots (more on that on slide 19).

Rules and Gameplay: Planting

Teams score points **towards collective goal** for ‘planting seeds’ at correct locations, as identified by the RFID tags.

‘Planting’:

- Depositing a ‘seed’ (a sphere of 1/2 inch diameter) inside a shallow hole (25 mm diameter, ~12 mm depth)
- Max **five seeds per robot**.

All RFID tags’ statuses are **programmed randomly** at the start, robots must communicate the tag’s ID to the server to learn its status (fertile/infertile soil).

Rules and Gameplay: ‘Emergency Warning’

At some point during the round, there might be an ‘**emergency warning**’ broadcasted over the WiFi network.

- Once the emergency warning is sounded, **all robots must return to base** immediately until the timer runs out (e.g. 1 minute).
- If the robot(s) fail to return to base, they are considered **stranded**.
- If robots enter the airlock one at a time, there **might not be enough time for all** of them to return successfully.
- Teams are encouraged to programme ‘formation movement’: **robots ‘tail gaiting’** one another upon entering the tunnel (it can fit up to 5 robots).

Rules and Gameplay: ‘Reviving’

Stranded robots can be revived if they are ‘**tapped**’ **by another robot** inside the arena.

- All robots must have a **mechanical interface** (a push-button) at their fronts. The button can be of **any size or design**.
- All robots must have an LED on their tops which is red by default but switches to **green when the button is pressed**.
- If the ‘saviour’ robot ‘taps’ the stranded robot and its LED turns green, the stranded robot is considered saved. It is then enabled via WiFi and **must return to base**.

Scenarios: Easy Difficulty

At first, you will be invited to play the scenario on ‘Easy’ difficulty.

- **Generous time budget** will be given to complete the mission.
- There will be no emergency warning.

The round is stopped when

- The teams are finished, or
- All seeds have been planted successfully, or
- Mission timer runs out.

Scenarios: Medium Difficulty

On ‘Medium’ difficulty,

- **Mission time limit is reduced**
- There is one emergency warning.
- Bonus mission unlocked: Find the **most brightly lit** areas.

If robots get stranded and **cannot be recovered** by other robots for some reason or another unexpected issue occurs that **makes the scenario unplayable**, teams can summon a ‘space tow truck’ to recover their robot(s) to base at the cost of point reduction.

Scenarios: Hard Difficulty

On ‘Hard’ difficulty,

- Track may feature mild **height variations** (ramps),
- Some holes may be covered by ‘mountain ranges’ **with sheer walls**,
- **Obstacles** appear between holes.

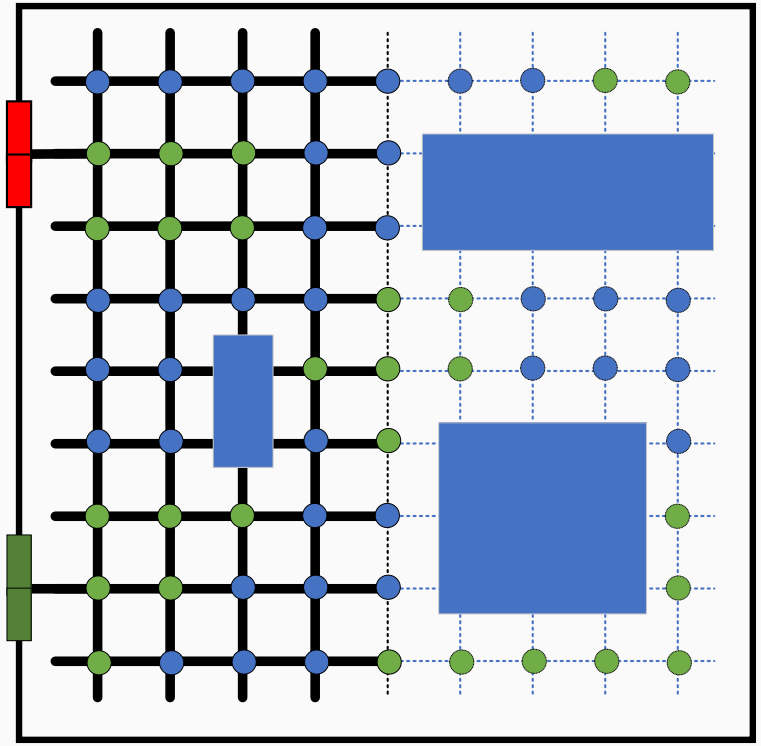

There can be also one or more emergency warnings and the bonus mission (**most brightly lit** areas) is still active.

Scenarios: Insane Difficulty

A very hard track:

- The top has only a **single access path**.
- **Varying angles** on ramps.
- An additional mission: find the **most elevated area**(s).

Relax, we won't do this to you, we promise!

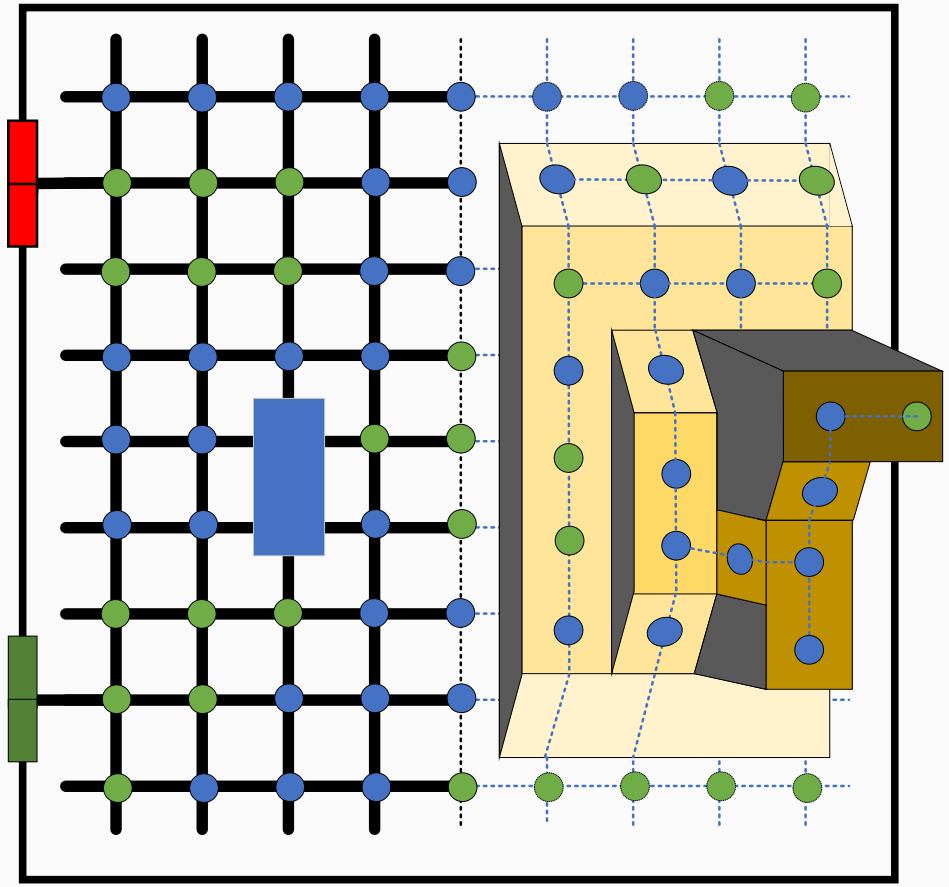

Scores and Prizes

There will be a total of **five different awards**:

1. Most individual points
2. Most revivals (other robots saved)
3. Most efficient robot (ratio between points and BoM cost)
4. People's choice award
5. Sustainability award

Electronics and Mechanics

All robots must bear the basic electronics kit:

- MCU, WiFi module, infrared sensors (line following), distance sensors (wall following).

In terms of mechanics, all robots must feature

- Basic frame (optional suspension); any drivetrain (wheels, tracks)
- A ‘planter’ (‘hopper’) housing up to 5 ‘seeds’
- A button at the front to ‘revive’ other robots (with LED turning green upon pressing)
- A mechanical kill switch

Hardware

On your first day at the Innovation Lab, inside their project crate each team will find the following components:

- An Arduino **GIGA R1 Wifi**
- A Motoron **M3S550 triple motor shield**
- A **reflectance sensor** array
- An **RFID sensor**

During the Finals, your robots must be powered by a battery.

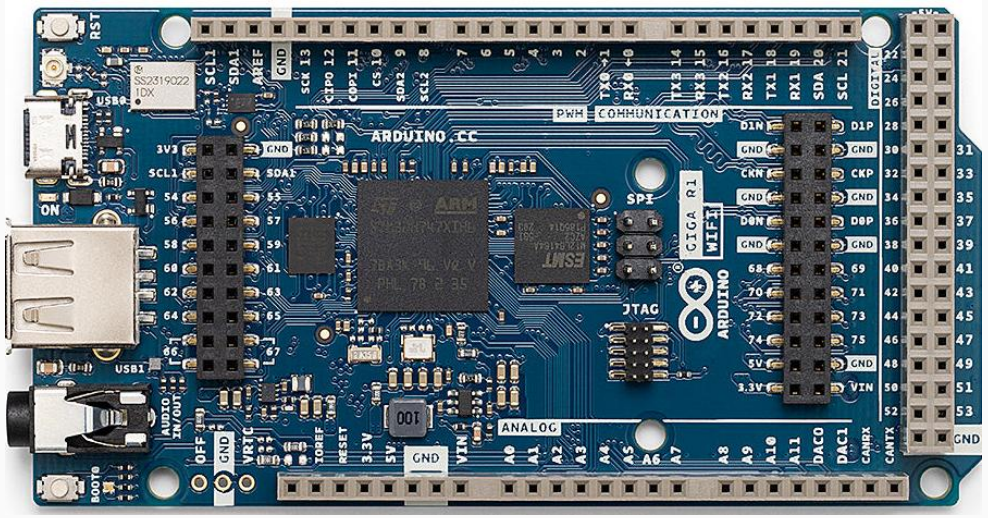

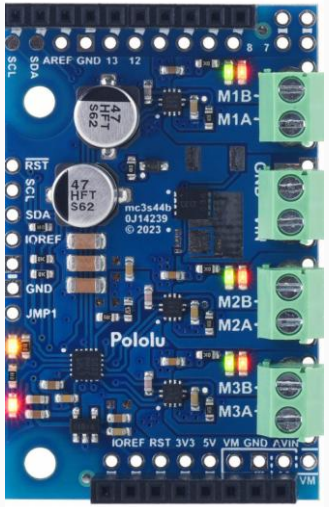

Electronics and Mechanics

All robots must bear the basic electronics kit:

- MCU, WiFi module, infrared sensors (line following), distance sensors (wall following).

In terms of mechanics, all robots must feature

- Basic frame (optional suspension); any drivetrain (wheels, tracks)
- A ‘planter’ (‘hopper’) housing up to 5 ‘seeds’
- A button at the front to ‘revive’ other robots (with LED turning green upon pressing)
- A mechanical kill switch

Proposed Plan for Week 1

Ideally, by the end of Week 1 you have:

- Completed CAD design of your robot with the drive train of your choice
- Designed the planting mechanism
- Designed the ‘reviving’ mechanism
- Manufactured (some of) the components
- Practiced uploading code to Arduino Giga
- Tested infrared (line) sensors
- Tested RFID reader
- Selected your team rep!