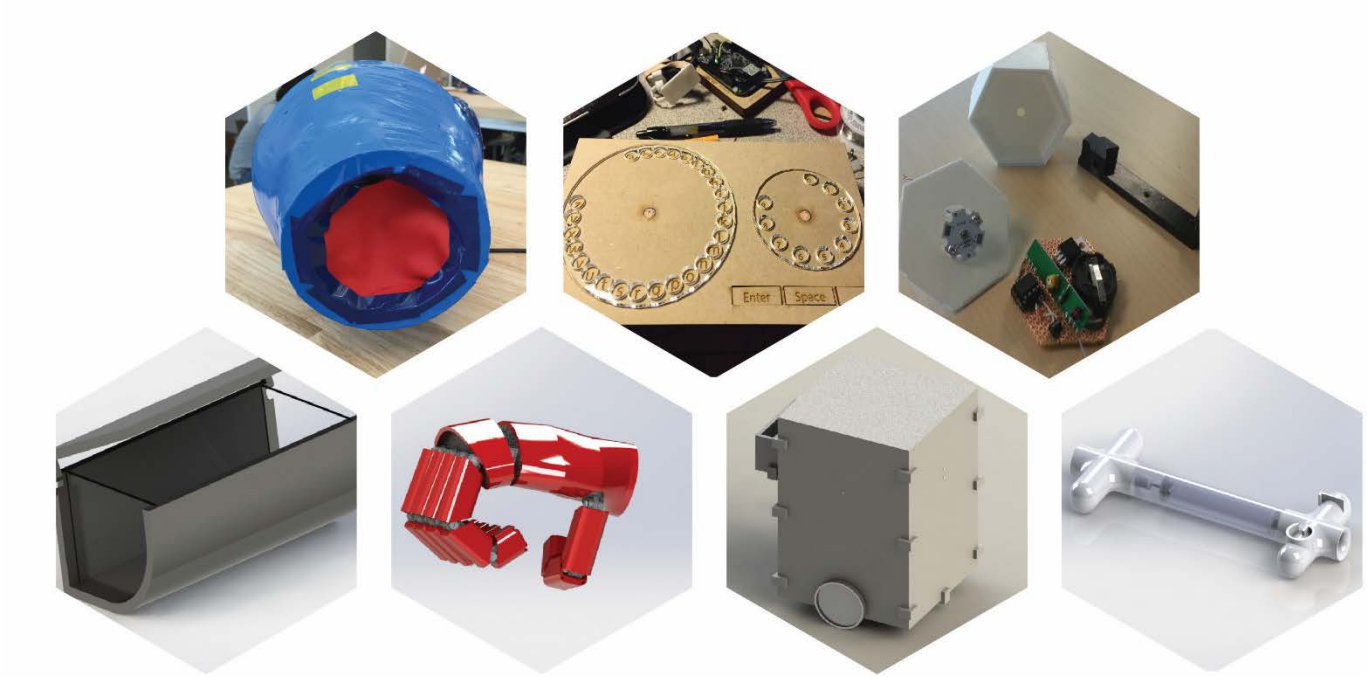

Design Engineering Portfolio

Bryan Thov
UC Berkeley
B.S. Mechanical Engineering
B.S. Electrical Engineering and Computer Science

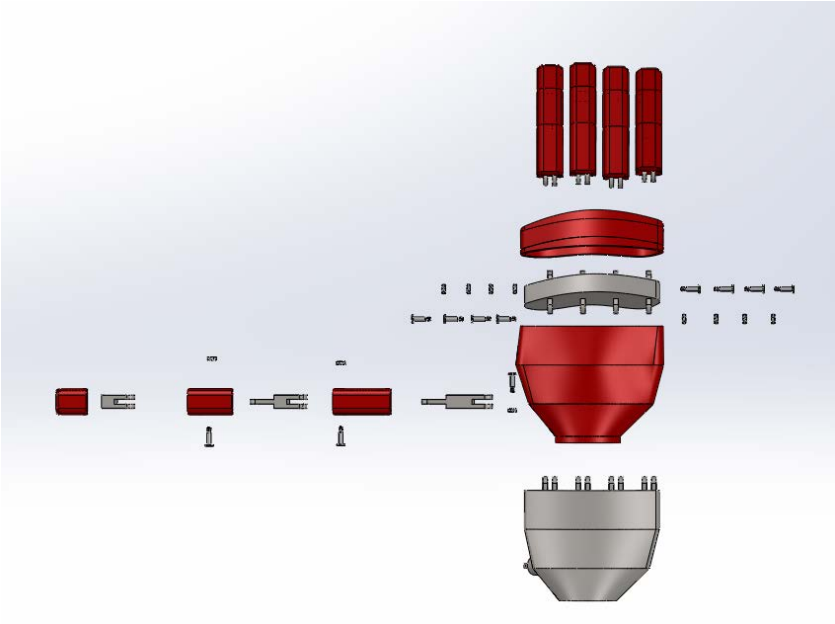

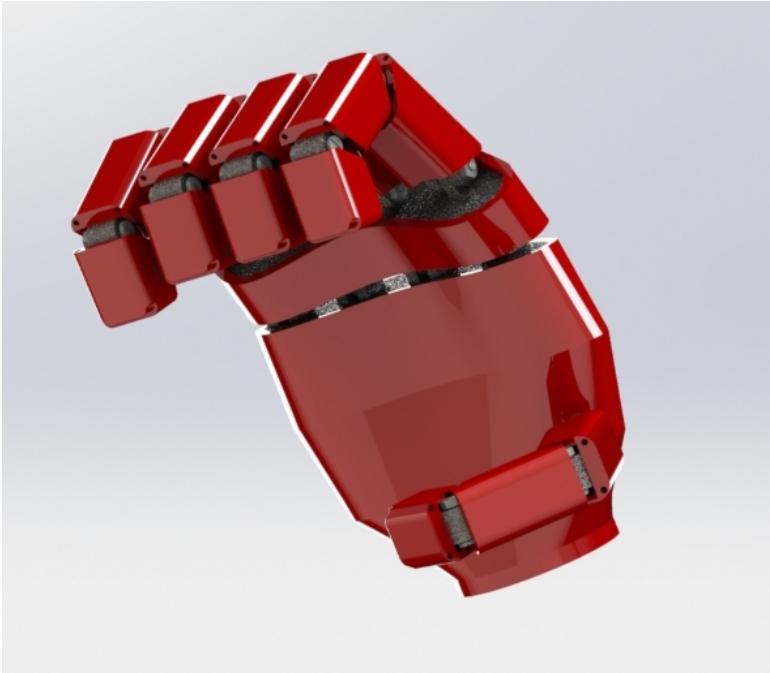

Mechatronic Hand

Processing of Materials in Manufacturing Final

Mechatronic prosthetic designed for patients to be active in sport driven activities

Skills used: Design, Solid Modeling, FEA, Force Analysis, Material Selection, Manufacturing Process Selection, Teamwork, Leadership

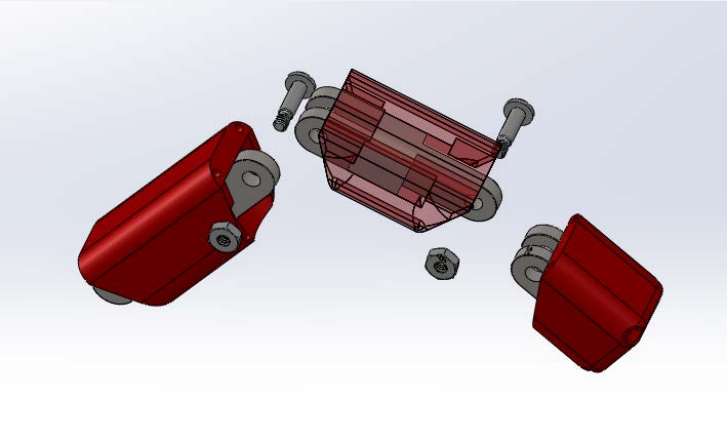

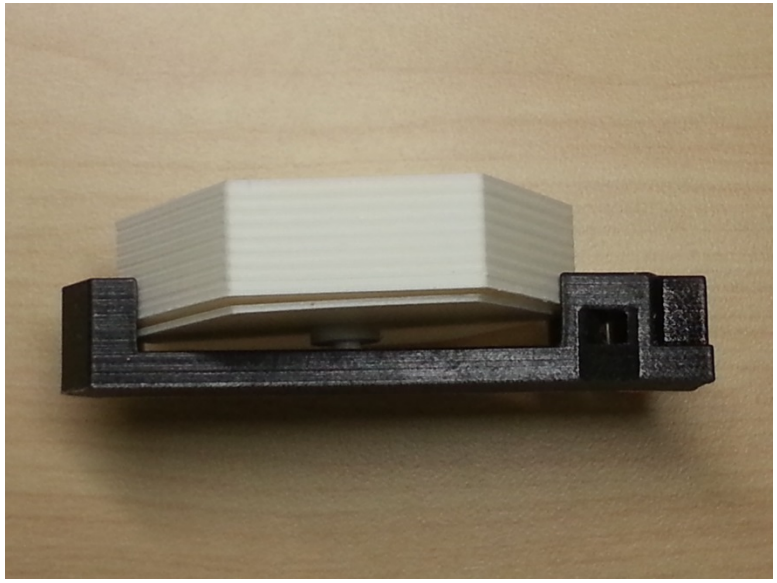

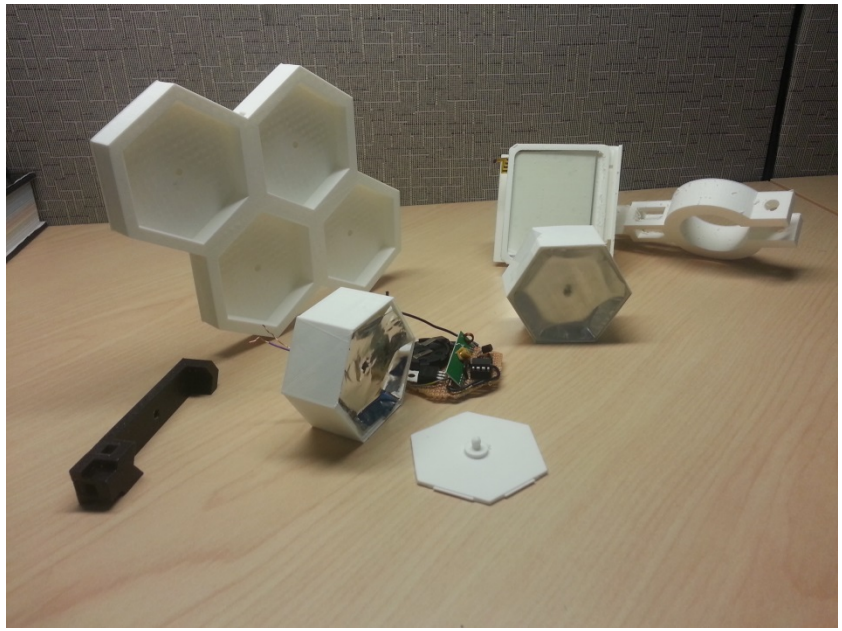

Interactive Bike Light

Autodesk Internship – Summer 2015

Bike light made to increase biker visibility in urban night riding as well as provide interactive functions for the rider

Skills used: Design, Solid Modeling, Prototyping, FEA, Force Analysis, Material Selection, Manufacturing Process Selection, Electronics Prototyping, Circuit Design, Soldering, Programming - Arduino

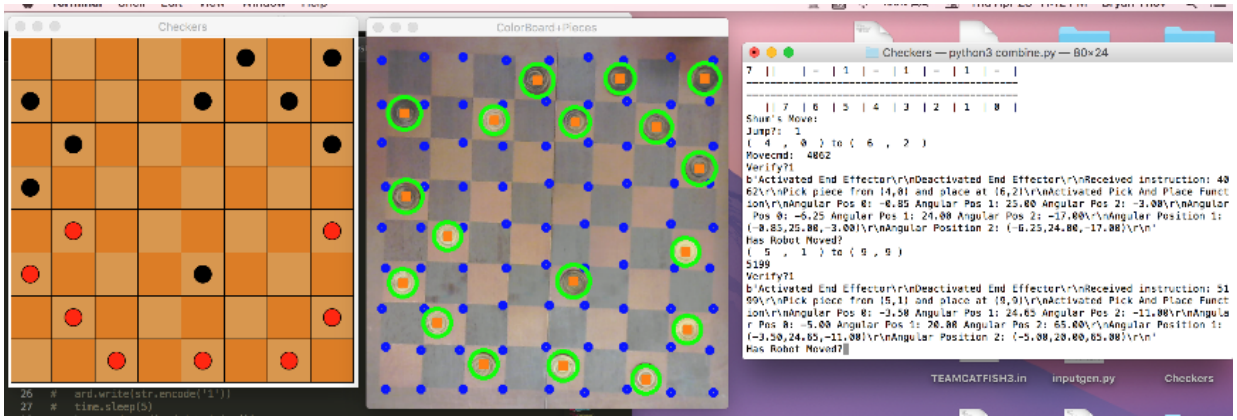

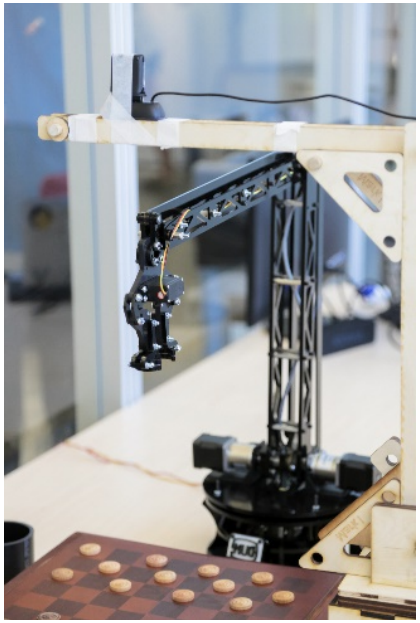

Dum-E – Checkers Playing Robotic Arm

Mechatronics - Final Project

Robotic arm made to play checkers against a human player

Skills used: Computer Vision – OpenCV, Programming – Python, Teamwork, Leadership

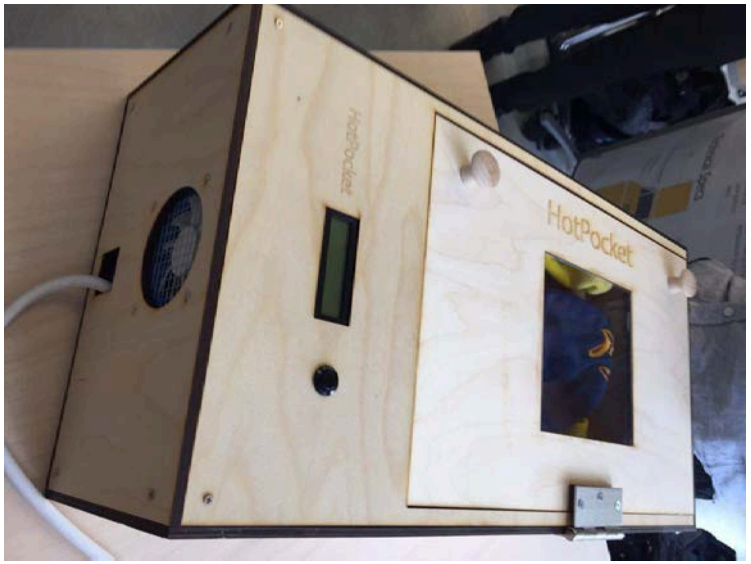

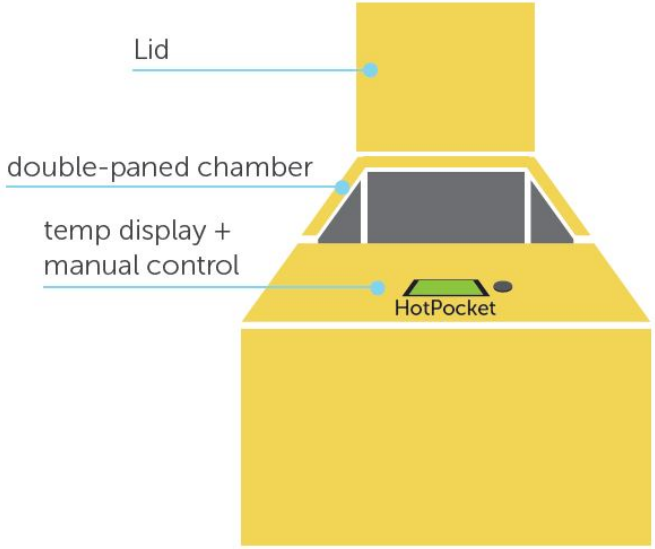

Hot Pocket – Automatic Clothes Warmer

Interactive Device Design – Final Project

Automatic clothes warmer that pairs with an app in order to warm clothes for the user to wake up to

Skills used: Coding – C++ / Android, Electronics Prototyping, Soldering, Engineering Consulting, Teamwork, Leadership

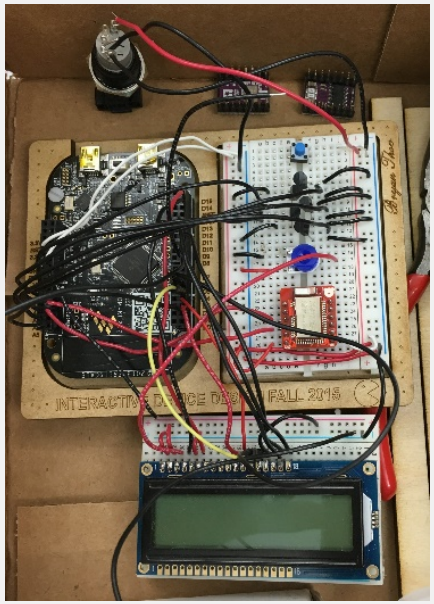

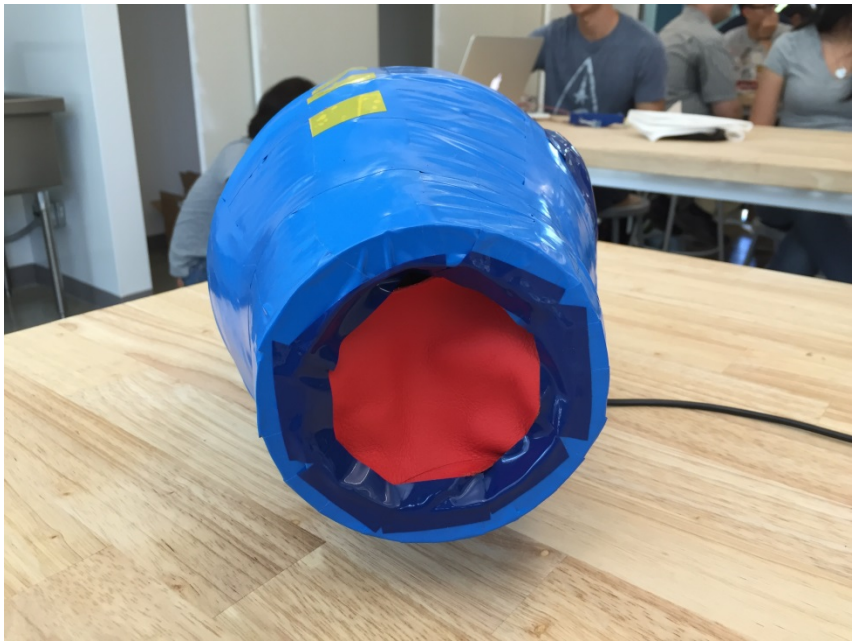

Mega Buster

Interactive Device Design – Game Controller

Game controller made to interact with flash based game: Megaman Project X

Skills used: Design, Prototyping, Electronics Prototyping, Laser Cutting, Programming – C++ / Java, Teamwork, Leadership

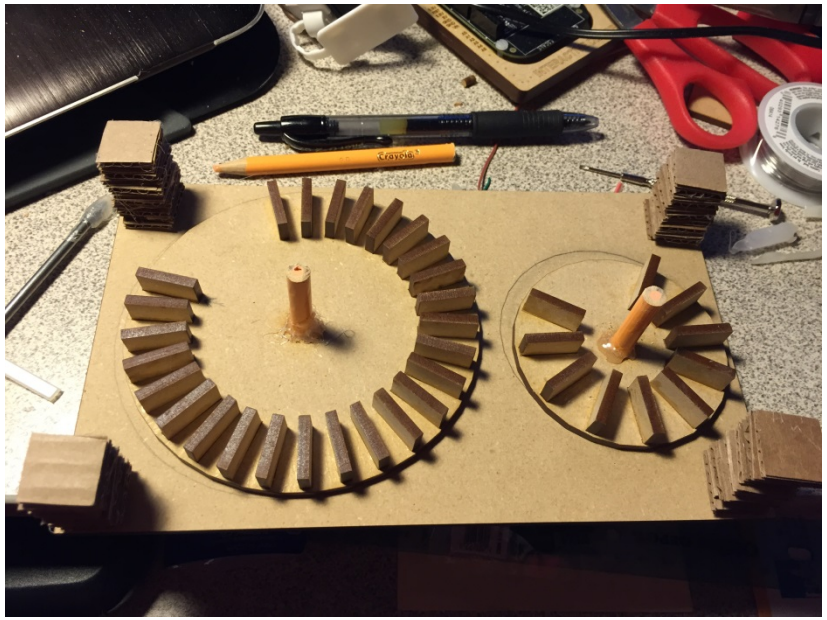

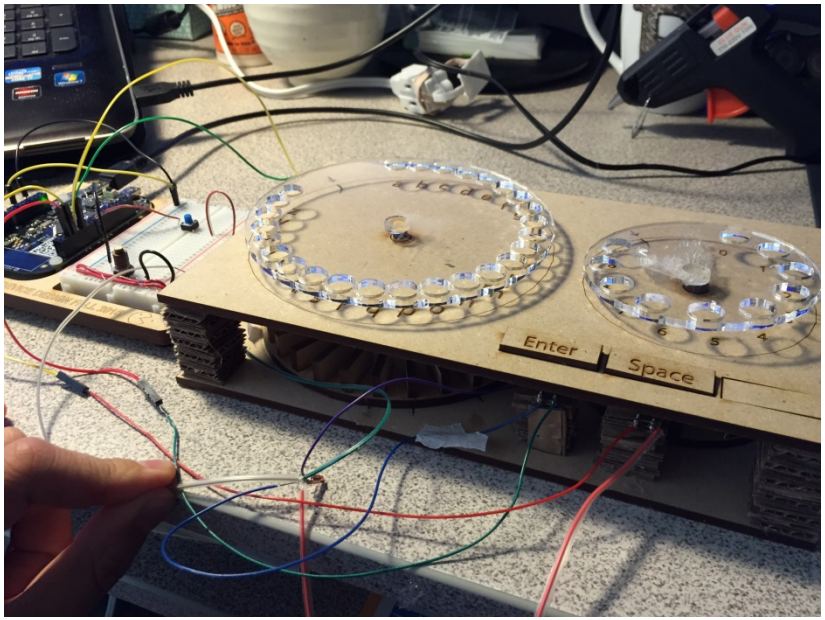

Rotary Keys

Interactive Device Design – Text Entry

Rotary telephone inspired text entry device that is able to interact as a USB device

Skills used: Design, Solid Modeling, Prototyping, Force Analysis, Electronics Prototyping, Soldering, Laser Cutting, Programming – C++

Zest – Personal Cooking Companion

Product Design – Final Project

Concept for a series of sensors interfacing with a phone application in order to assist cooks in their cooking adventures

Skills used: Design, Solid Modeling, Prototyping, Packaging Design, Business Modeling, Material Selection, Teamwork, Leadership

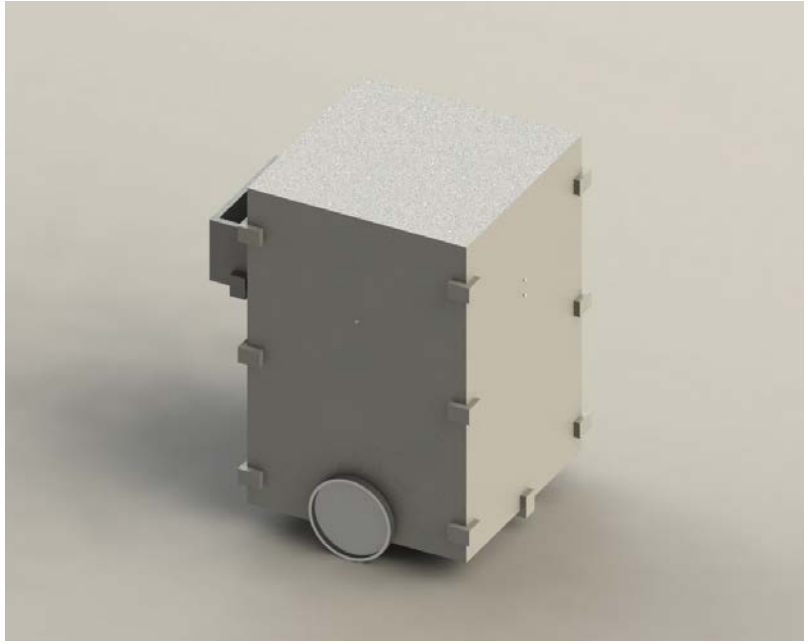

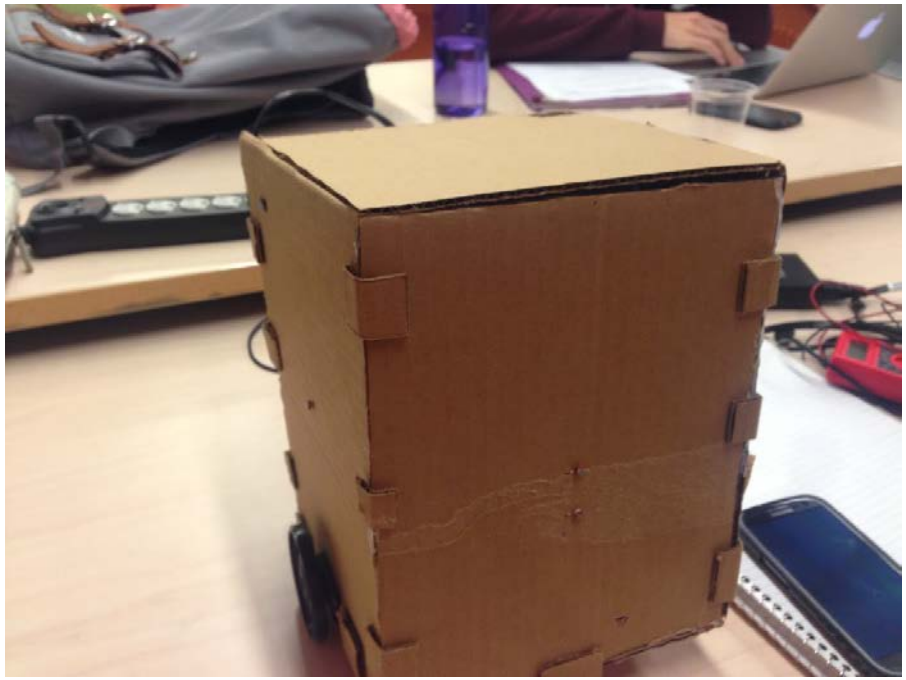

Light Detecting Robot Trashcan

Microelectronic Circuits Final Project

Robot trashcan made to follow light inputs and allows for touchless interfacing to throw away trash

Skills used: Design, Solid Modeling, Prototyping, Electronics Prototyping, Circuit Design, Soldering, Programming - C

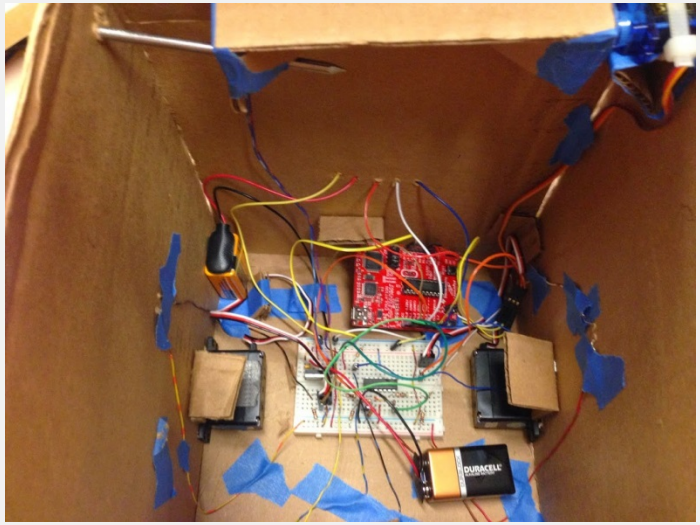

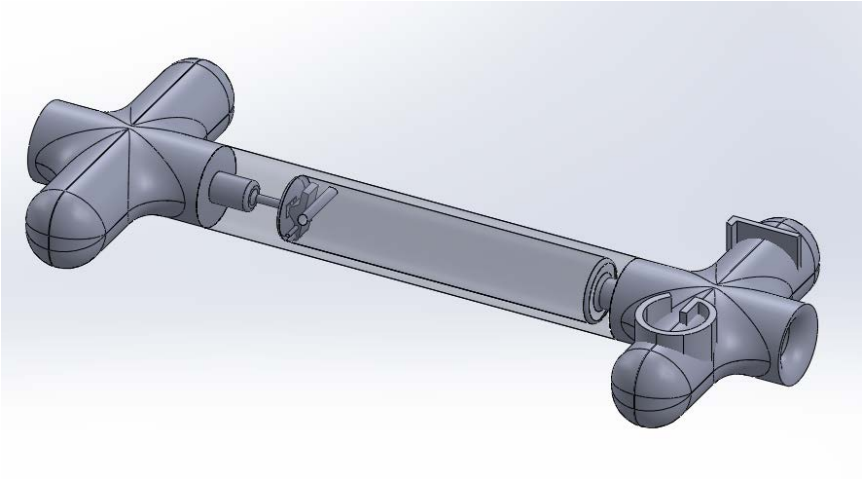

3D Printed Microfluidic Diodes

Micro Mechanical Methods (M3B) Research

3D Printed Microfluidic Diodes that aimed to achieve unidirectional fluid flow at a micro-volume setting
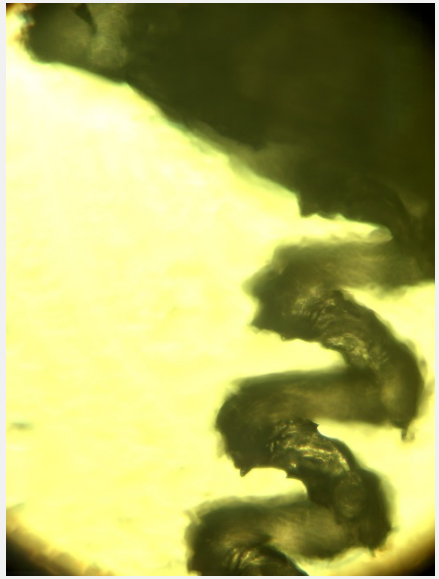
Skills used: Design, Solid Modeling, 3D Printing, Laboratory Testing, Teamwork, Leadership