MATT ZWARTS DOME LIFT SYSTEM

v1.1 - 10/2020

www.printed-droid.com

The latest diagrams and files can always be found here:
http://www.printed-droid.com/files/

The Dome Lift System was developed by Matt Zwarts for Michael Baddeleys R3D2.
The files are in Michael Baddeleys R2D2 files or on Thingiverse
Including an in depht manual and BOM

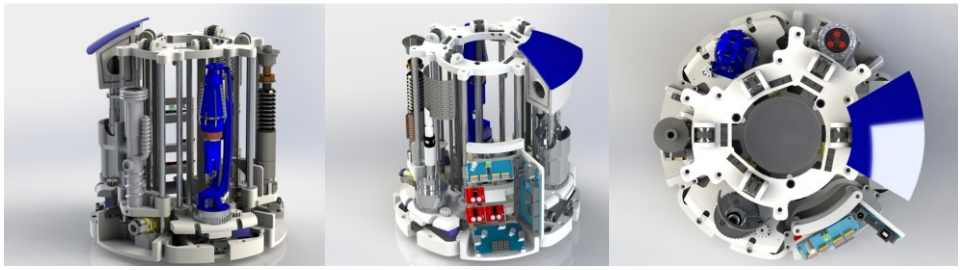

This wiring schematic should give you a quick overview how everything's connected

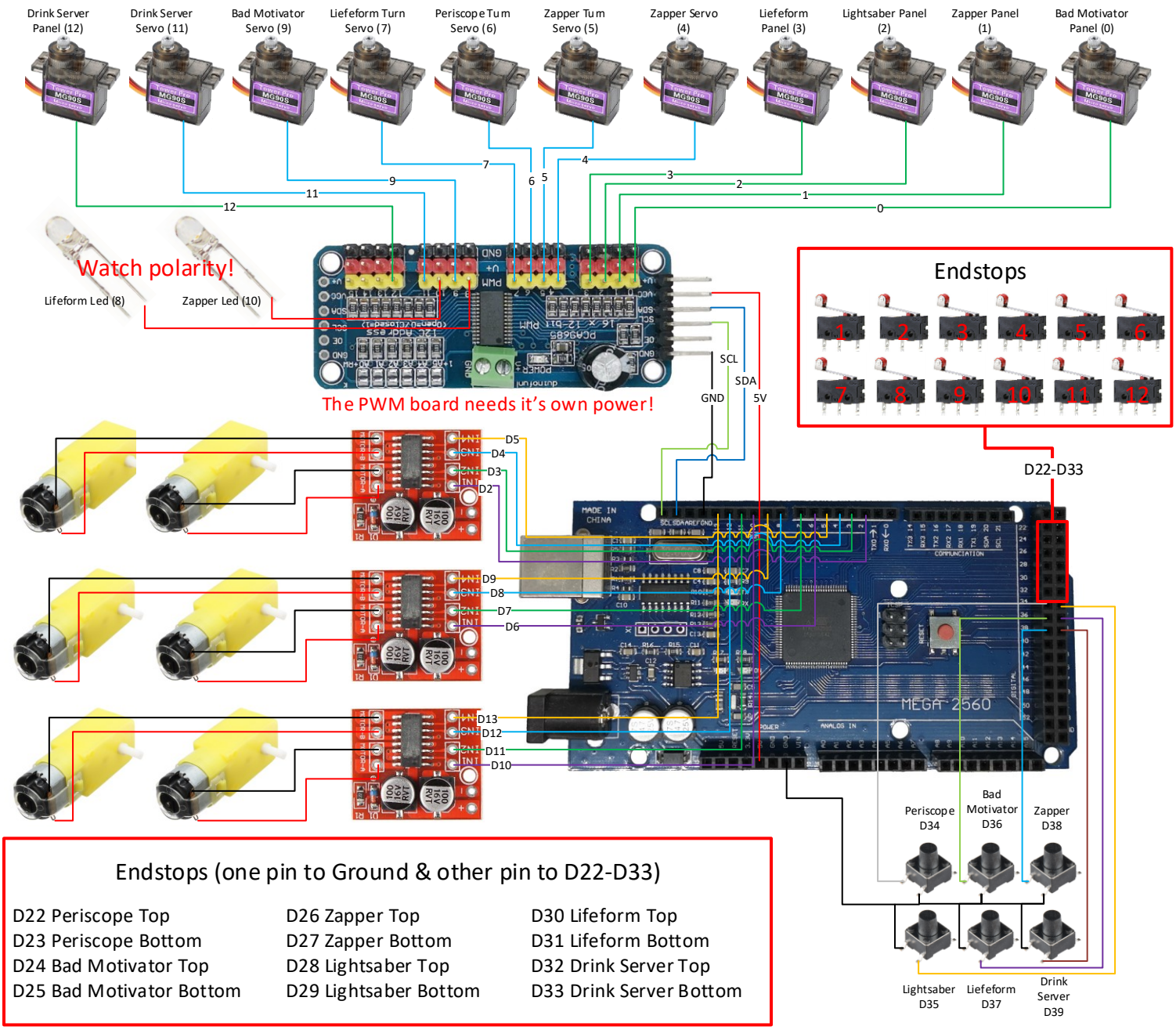

Endstops (one pin to Ground & other pin to D22-D33)

D22 Periscope Top	D26 Zapper Top	D30 Lifeform Top
D23 Periscope Bottom	D27 Zapper Bottom	D31 Lifeform Bottom
D24 Bad Motivator Top	D28 Lightsaber Top	D32 Drink Server Top
D25 Bad Motivator Bottom	D29 Lightsaber Bottom	D33 Drink Server Bottom