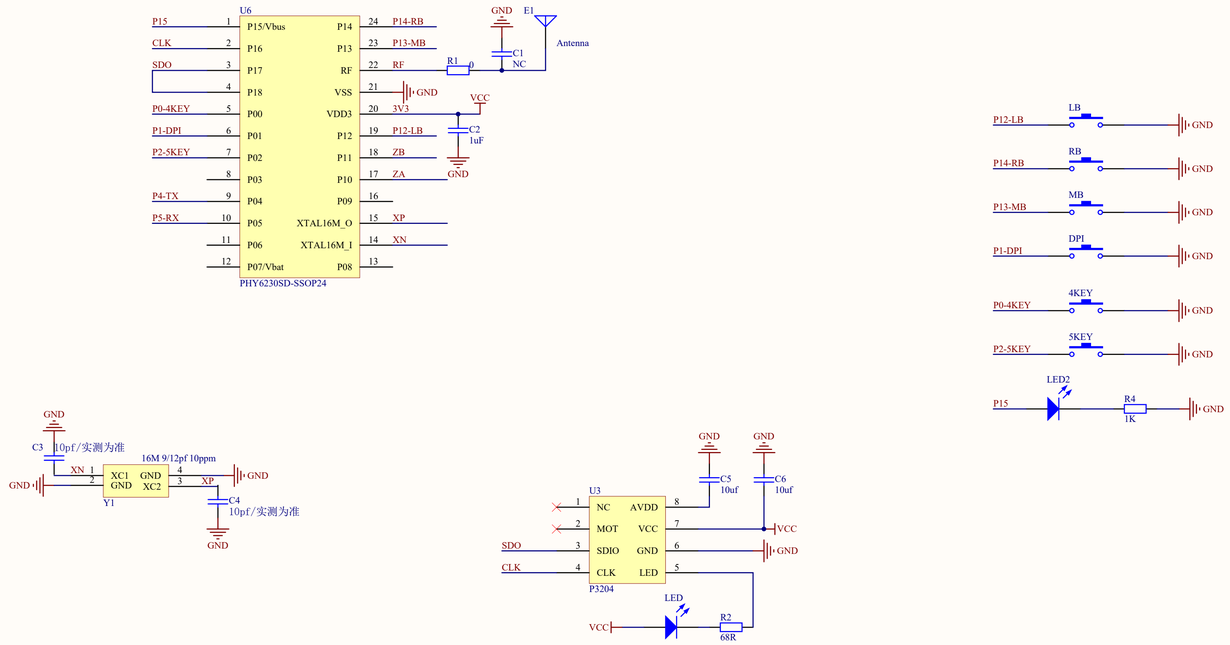

Title		
Size A3	Number	Revision
Date: 2022/11/7	Sheet of	
File: D:\ \..\6230SD MOUSEA V1.0 2022\6230SD.SCHDOC	Drawn By:	