Finite Element Analysis and Design of Torque-Arm

Addeo, Bryce
Section 12158 12/5/2025

***Abstract*— This project investigates the structural performance and minimum mass design of a torque-arm subjected to combined horizontal and vertical loading. Finite element analysis (FEA) in Abaqus was used to evaluate the displacement and stress response of the torque arm while systematically refining the mesh and modifying geometric design variables. A preliminary Mechanics of Materials calculation was first used to approximate the vertical deflection at the load and the maximum Von Mises stress, providing a baseline for comparison with numerical results. A convergence study using global element sizes of 0.62, 1.0, and 1.61 established a convergence rate of $\alpha = 0.67$ and an exact vertical displacement of $U_0 = 0.09735$ cm at the load application point. An element type comparison showed that higher-order elements (6-node triangle and 8-node quadrilateral) yielded more accurate displacement and stress results than their linear counterparts due to improved interpolation of bending behavior. Finally, a minimum-mass optimization was performed by adjusting the geometric variables x_1, x_2, and $x_3$within provided bounds. The optimized design achieved a reduced mass of 4.13751 kg while maintaining a maximum von Mises stress of 245.4 MPa, remaining just below the allowable limit of 250 MPa. These results demonstrate the effectiveness of convergence study, element type selection, and mass optimization in torque-arm analysis.**

***Index Terms*—Convergence Study, Displacement, Finite Element Analysis, Stress, Torque Arm**

I. Problem Statement

THE objective of this project was to analyze and design a torque-arm by performing convergence and element size comparison studies and changing variables to minimize the mass without exceeding the maximum allowable stress limit. The torque arm geometry, loading conditions and fixed boundary condition location are shown below in Fig. 1 below where F_x is the horizontal load equal to -4800 Newtons and F_y is the vertical load equal to 10,400 Newtons [1].

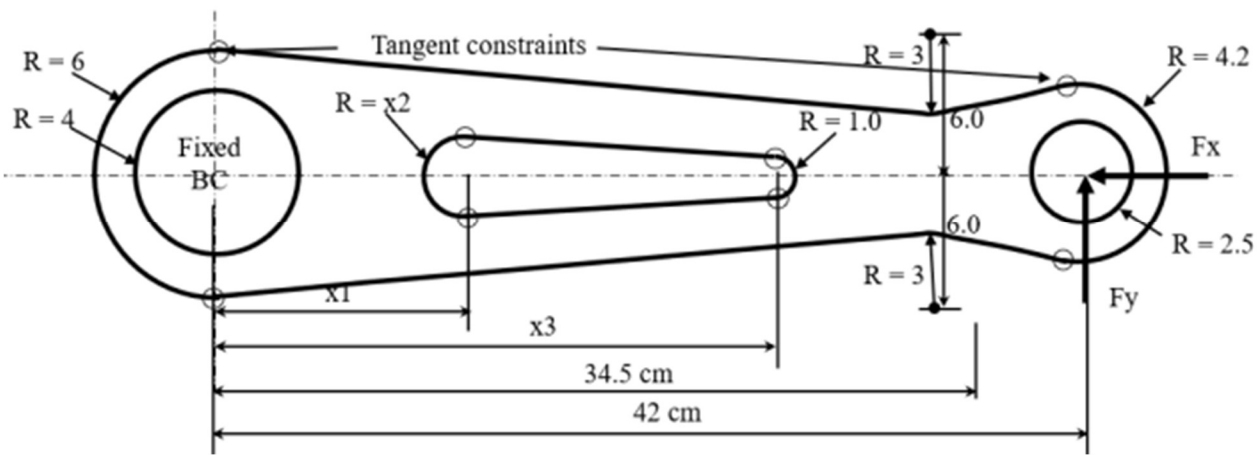

Fig. 1. Geometry and dimensions of a torque-arm model at the initial design

The material properties provided were a Young's modulus, *E,* of 200 GPa, a Poisson's ratio, *v,* of 0.35, an allowable strength, $\sigma_{\text{allowable}}$, of 250 MPa, and density, ρ, of 7850 kg/m^3. The thickness of the torque arm was equal to 2.0 cm. Note in Figure 1 there are three dimensions labeled as x_1, x_2 and x_3. These variables will be subject to change between a lower, initial and upper value shown in Table I below throughout the design testing of the torque arm.

Table I
Upper and Lower Bounds of Design Variables (cm)

Design Variable	Lower Bound	Initial Value	Upper Bound
x_1	8.0	13.0	15.0
x_2	0.5	2.5	3.0
x_3	20.0	27.0	37.0

This project featured five different tasks. The first task, performed before FE modeling, was a preliminary analysis to estimate the vertical displacement at the load application point and the location and value of the maximum von Mises stress using Mechanics of Materials methods. Multiple assumptions were made to simplify the calculation process including that the torque arm was a 42 cm long x 2.5 cm wide cantilever beam fixed at the boundary condition with the forces acting at the opposite end.

Task 2 involved using Abaqus, a FEA software, to make a sketch with the appropriate initial dimensions and constraints where the geometry is constrained but the variables defined in Table I are adjustable. Next, task 3 involved performing a convergence study to determine the convergent value of the vertical displacement at the load application as more elements were added. Global element sizes 0.62, 1.0 and 1.61 were used for the study to enable the calculation of the convergence rate, α, and converged displacement, U_0. The following four equations were used to solve these variables in the convergence study where g and p are constants, h is the element size and U_h is the displacement result for the element size.

$$U_h = U_0 + gh^\alpha \tag{1}$$

$$h_3 = ph_2 = p^2 h_1 \tag{2}$$

$$\frac{|U_{h_3} - U_{h_2}|}{|U_{h_2} - U_{h_1}|} = p^\alpha \tag{3}$$

$$U_0 = \frac{U_{h_1} p^\alpha - U_{h_2}}{p^\alpha - 1} \tag{4}$$

After the convergence study, task 4 involved changing element types between 3-node triangle, 4-node quadrilateral, 6-node triangle and 8-node quadrilateral to determine which type provided the best result in terms of accuracy. Finally, task 5 was to minimize the mass of the torque-arm by changing the design variables x_1, x_2 and x_3 using 4-node quadrilateral elements with global size equal to 0.62.

II. Procedure

Task 1

Task 1 involved a preliminary calculation that assumed the torque arm was a cantilever beam with length equal to 0.42 meters, height equal to 0.042 meters and thickness equal to 0.02 meters. The cantilever beam was fixed at the same location as the torque arm and the forces were applied at the opposite end. First, the moment of inertia was solved which then allowed for the maximum deflection at the end of the beam to be solved for which was equal to 1.04 cm. Next, the maximum moment at the tip was calculated which then allowed maximum bending stress to be calculated. After that axial normal stress and average shear stress were calculated. Finally, all three stress results were used to calculate the maximum Von Mises Stress equal to 737.46 MPa.

Task 2

Task 2 involved sketching the fully constrained geometry of the torque-arm in Abaqus. A 2D planar and deformable part was created and the directions from the torque-arm video were followed to complete the sketch [2]. It was important to add a tangent constraint at every point where an arc met with a straight line. Arcs were made by sketching circles and then trimming away the unwanted edges and re-dimensioning. Once all lines were properly dimensioned and green, the fully constrained sketch was complete.

Task 3

Task 3 was to carry out a convergence study on the torque-arm to determine the convergence rate and the exact value of the displacement at the location of the load. Three global element sizes were provided in the handout—0.62, 1.0, and 1.61—to guide the convergence study. First, p was solved for using (2) where h_1 was 1.61 and h_2 was 1.0. Next, the convergence rate was solved using (3) and found to be equal to 0.67. Then, the exact displacement, U_0, was solved using (4) and found to be equal to 0.09735 cm. Finally, the displacement at the load point and maximum stress were plotted against number of nodes to exhibit the convergence plot.

Task 4

Task 4 involved using four different element types—3-node-triangle, 4-node-quadrilateral, 6-node-triangle and 8-node-quadrilateral—with global element size 5 and comparing results for displacement at the load application point and the maximum Von Mises stress. The element type was changed using the mesh control and element type options.

Task 5

Finally, task 5 involved adjusting the design variables—x_1, x_2 and x_3—to reduce the mass of the torque arm as much as possible without exceeding the allowable stress of 250 MPa. This was done by first changing the sketch dimension and then regenerating the part. Then the mesh had to be reactivated and the job resubmitted. Next, the resulting maximum stress was observed to ensure it did not exceed the allowable stress, and the change in mass was observed by pressing, Tools, Query, and Mass Properties to display the mass in kg. All three design variables were iteratively adjusted until the minimum mass design was achieved.

III. Results

Task 1 Results

Table II below shows the calculated variables from the preliminary calculation where I is the second moment of inertia, d is the vertical displacement at the tip, σ_b is the maximum bending stress, σ_x is the axial normal stress, τ_{avg}, is the average shear stress, and σ_{vm} is the maximum Von Mises stress.

Table II
Preliminary Calculation Results

Variable	Value	Units
I	1.2348×10^{-7}	m^4
d	0.0104	M
σ_b	742.86	MPa
σ_x	-5.71	MPa
τ_{avg}	12.38	MPa
σ_{vm}	737.46	MPa

Task 2

The fully constrained geometry sketch of the torque-arm from task 2 made on Abaqus is shown in Fig. 2 below.

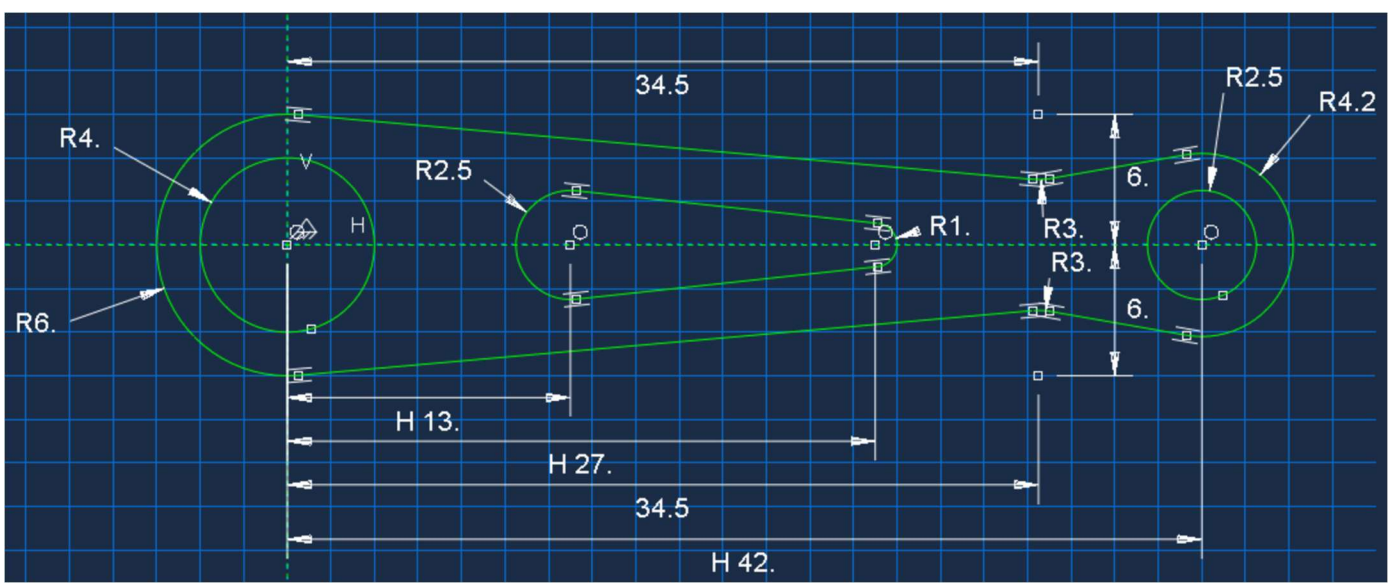

Fig. 2. Fully constrained geometry sketch of torque arm

Task 3

Table III below includes the displacement and stress data and the number of nodes and elements for the three element sizes of the convergence study.

Table III
Convergence Study Data

Element Size	Max Displacement (cm)	Max Stress (MPa)	# of Nodes	# of Elements
0.62	0.09497	1.586	914	758
1.0	0.09407	1.537	420	320
1.61	0.09283	1.447	241	172

Based off these values, the *convergence* rate, α, and the exact displacement, U_0, were calculated and are presented in Table IV below.

Table IV
Convergence Study Results

Parameter	Value	Units
α	0.67	N/A
U_0	0.09735	cm

The displacement and stress values were plotted against the number of nodes from Table III as shown in Figure 3 and 4 below, respectively.

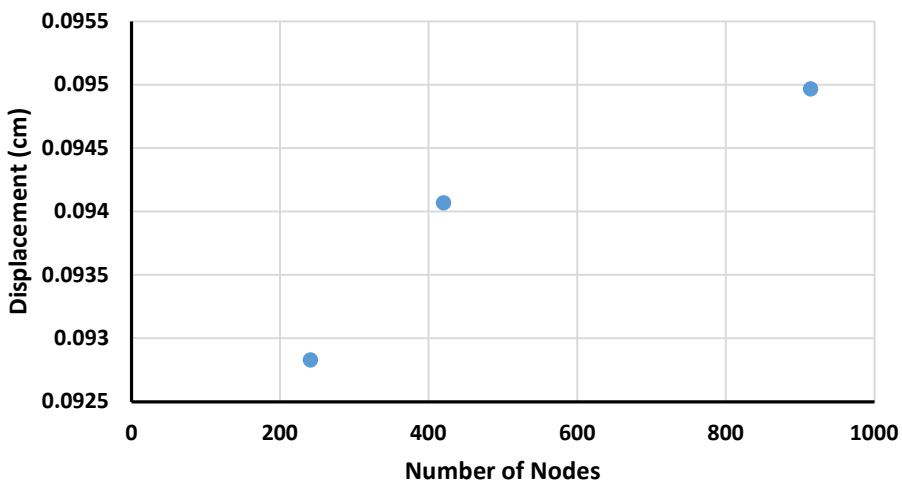

Fig. 3. Displacement vs Number of Nodes Plot from Convergence Study

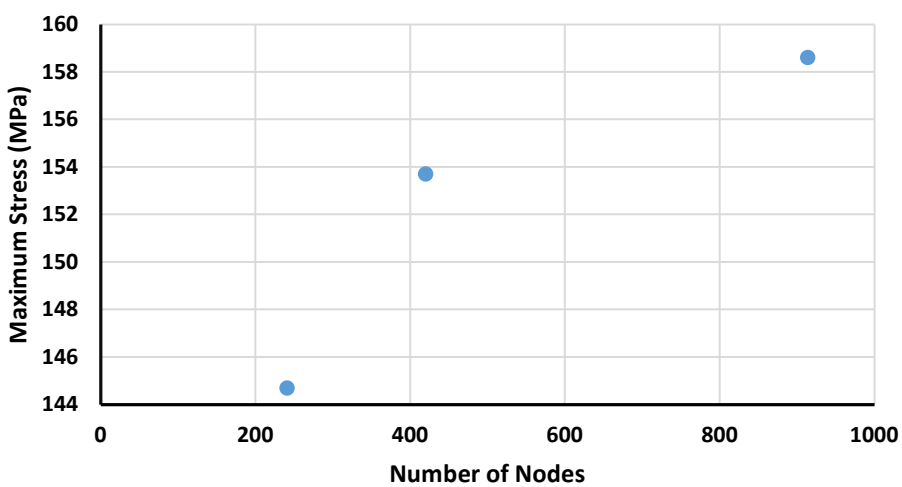

Fig. 4. Maximum Stress vs Number of Nodes Plot from Convergence Study

Task 4 Results

Table V below shows the displacement and maximum stress results for the 4 different element types tested with a global size of 1.5.

Table V
Different Element Type Results

Element Type	Displacement (cm)	Maximum Stress (MPa)
3-node-triangle	0.090824	146.7
4-node-rectangle	0.092987	144.1
6-node-triangle	0.095322	164.4
8-node-rectangle	0.095723	159.5

Task 5 Results

Table VI below shows the design variable values and corresponding mass and maximum stress for the initial case and final minimum mass case.

Table VI
Minimum Mass Design Results

Case	x_1	x_2	x_3	m (kg)	Maximum Stress (MPa)
Initial	13.0	2.5	27.0	5.00648	145.4
Final	9.0	3.0	34.5	4.13751	245.4

IV. Discussion

Task 1 Discussion

The displacement result from the preliminary calculation was 968.31% larger than the exact displacement calculated in the convergence study. However, the maximum von Mises stress did not deviate quite as much but was still about three times larger than the allowable stress. These results conclude that the cantilever beam assumption previously described was likely too extreme or did not utilize the best dimensions for length and thickness. Instead of using a cantilever beam with a rectangular cross section, using a more complex cross section to better model the geometric intricacies of the torque arm might have produced better results.

Task 3 Discussion

The results from the convergence study made sense since the displacement got closer to its exact value as more elements were used or each element decreased in size. Additionally, the displacement versus number of nodes plot aligns with the calculated exact value because if a line was traced passing through all three points and continued forever, then it would likely flatten out right around the calculated exact value of 0.09735 cm. No matter how many more elements were added, the resulting displacement would still fall some degree below the exact value of 0.09735 cm despite approaching closer. Eventually, there would be diminishing returns to adding any more elements to try to get a more accurate result.

Task 4 Discussion

The results from task 4 reveal that the 6-node-triangle and 8-node-rectangle produced a displacement result closer to the exact value than the 3-node-triangle and 4-node-rectangle, respectively. The reason for this is because higher order elements can represent curved displacement fields and strain gradients far better than the linear elements. That improved interpolation is why they give more accurate displacements and stresses for the same mesh density, especially in a bending/ stress-concentration problem like the torque arm.

Task 5 Discussion

Adjustments were made to the design variables based off how they would affect the mass of the torque arm. For example, decreasing x_1 would make the mass less by increasing the area of the middle cutout, and increasing x_2 and x_3 would also have the same effect. However, any adjustment to decrease the mass also resulted in an increased maximum stress since there was less material to resist the loads. Therefore, the three design variables were changed one at a time and the differences in mass and stress were observed to plan what change would be made next. After the final iteration, the mass decreased by 0.86897 kg from 5.00648 kg to 4.13751 kg, and the maximum stress had increased from 1.454 MPA to 245.4 MPa. To optimize the mass of the torque arm, the resulting maximum stress was very close to the allowable stress of 250 MPa without exceeding it. This analysis revealed how much mass can be saved through a minimum mass design FEA analysis without risking failure of the torque arm.

V. References

[1] Ting, Dong, *Abaqus tutorial torque arm.* Youtube.com, 5 years ago
[2] Ting, Dong, *Project#2 Analysis and Design of Torque-Arm.* Gainesville, Florida, November 2025