Design Report 1

Bryce Addeo

29 September 2024

EML2322L – Fall 2024

Design Description

The following design is for a food slicer that will be powered by an air engine. The requirements of this device were to be connected to the air engine at the shank of the shoulder screw or the outer cylindrical surface of the fly wheel, to be constructed from materials safe for food contact, to allow for variation in slice thickness, and to have suitable displacement to slice a variety of foods. Additionally, the device needed to have between four and twelve components, with no more than one component being made from additive manufacturing, and a total price not exceeding $75.

The design for the food slicer utilizes a slider-crank mechanism to translate the rotational motion of the flywheel to translational motion for slicing. Six main components make up the design which are a shorter slider, a longer slider, the base of the slicer, a blade attachment piece, the blade, and a food holder. In addition to these main components, there is also a small pin to connect the sliders, four screws and two double washers as off the shelf components, and the addition of two small screw holes to the side of the air engine base.

The smaller slider connects to the shank of the shoulder screw connecting the flywheel and piston. A transition fit will be used to allow for minimal rotation of the slider as it follows the path of the flywheel to ensure it will not interfere with other parts of the air engine. On the end of this slider not connected to the air engine, there will be a circular cut halfway down the height of the slider to support the bottom of the pin. This will allow the longer slider to connect to the smaller slider with a clearance fit to the pin. Unlike the fit between the smaller slider and the shank of the should screw, this clearance fit will allow the longer slider to easily rotate to provide sufficient motion for the slicer. Both sliders and the pin connected them will be made of stainless steel 304.

The base of the slicer, made of aluminum 6061-T6, has an overall rectangular prism geometry with internal cuts to allow for motion of the blade and its attachment piece along it without interference. This cut surface will be lubricated to allow for smooth movement of the blade attachment piece. The slicer base will connect to the air engine base via a press fit and screws. There is a rounded rectangular notch on the back of the slicer base as well as a screw hole on both sides near the back. A rounded rectangular hole will be added to the front of the air engine base as well as a screw hole on both sides near the front. Therefore, the slicer base will be press fitted into the air engine base, and then the screws near the back of the slicer base will be secured to the screws at the front of the air engine base via a double washer. The inclusion of both a press fit and screws is to ensure the slicer remains stable and securely attached to the air engine during operation. Additionally, on the front face of the slicer base there will be a rounded rectangular hole for the food holder to attach.

The blade attachment piece, made of aluminum 6061-T6, has an overall cubic geometry but features a cylindrical notch on top that connects to the end of the longer slider that is not connected to the pin. There is also a rounded rectangular hole on the front face of this component for the blade to tightly press fit into. The blade, made of stainless steel grade 440C, shown in the concepts is relatively thin and has a sharp end for cutting. On the end that is not sharp, the blade has a rounded rectangular notch to press fit into the hole on the blade attachment. This blade can be removed with an application of force and swapped out for other blades with variable slice thickness.

The food holder component, made of glycol-modified PET plastic, has an overall cylindrical geometry that is mostly hollow on the inside for food to go into. The inside bottom surface is dimensioned so that most average sized foods that could go in the slicer will be positioned at the right height for the blade. The food holder has a rectangular cut at the front and back to allow for full clearance and movement of the blade through it. It also has a rounded rectangular notch to tightly connect it to the matching hole in the slicer base via a press fit. Additive manufacturing will be used to create this component as it must be made from a food safe plastic and has complex geometries such as the rounded rectangular notch that juts out of the cylindrical surface. In addition to holding food, the other main function of this component is to protect the user from the blade as it keeps majority of the blade unexposed throughout the slicing process.

Conceptual Design

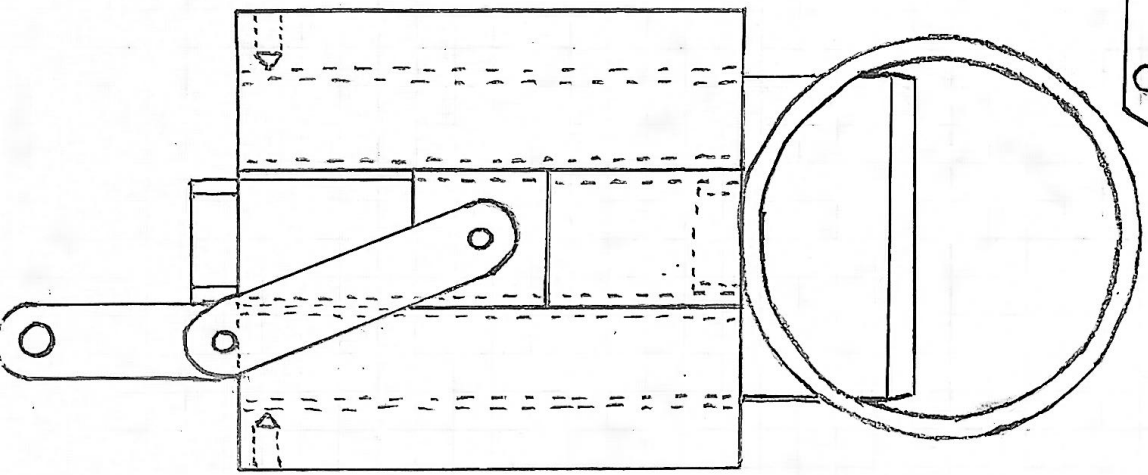

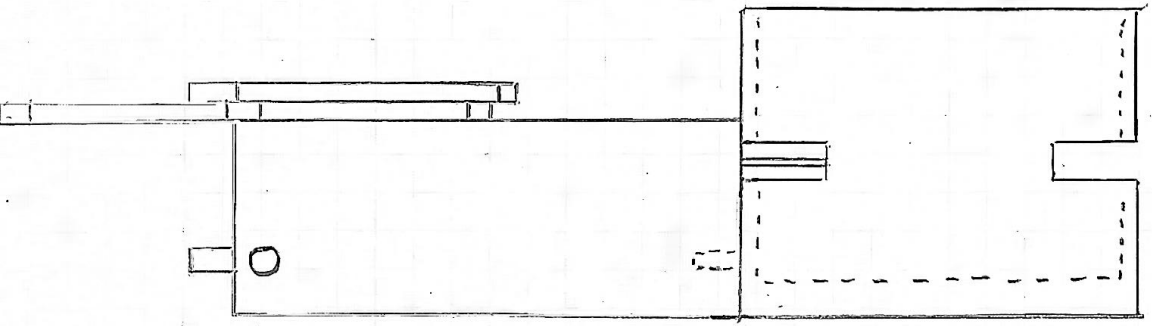

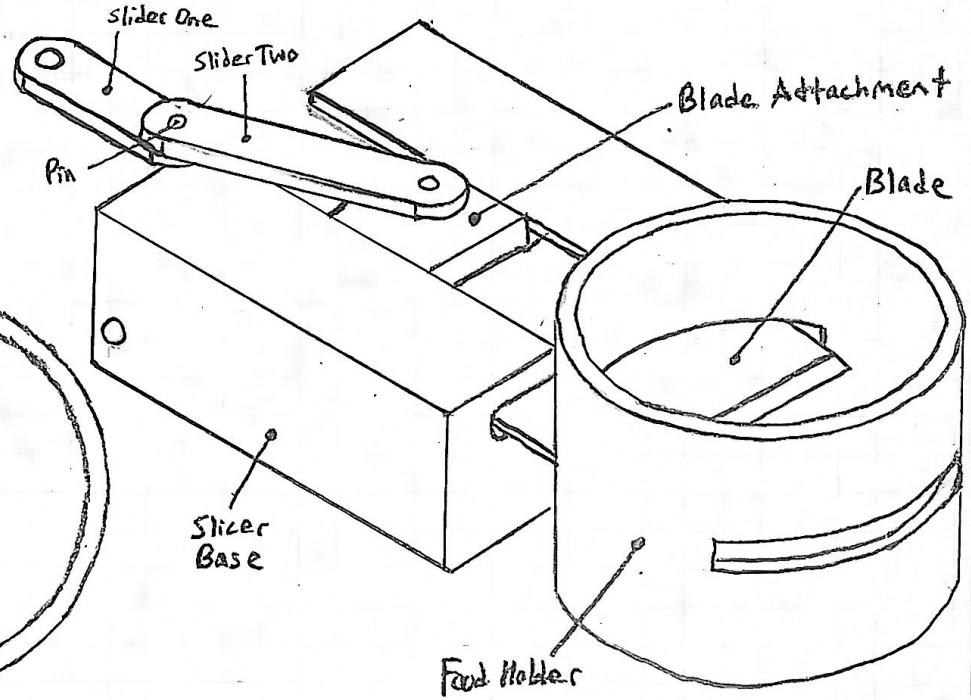

TITLE: Slicer Assembly

DRAWN: Bryce Addeo

DESIGNED: Bryce Addeo

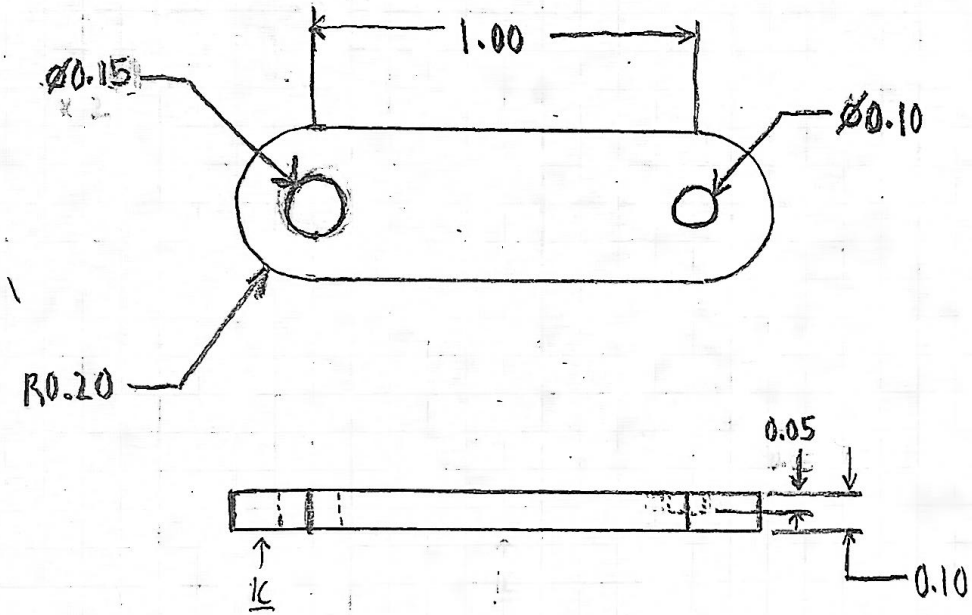

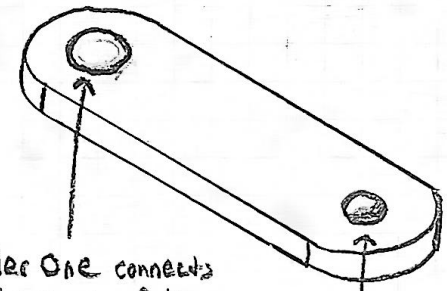

1A:
Slider One connects to the shank of the shoulder screw connecting the flywheel and piston via a transition fit

1B:
The depth of this hole is half the height of the slider so that the pin can rest on the bottom surface

TITLE:	Slider One
DRAWN	Bryce Addeo
DESIGNED	Bryce Addeo

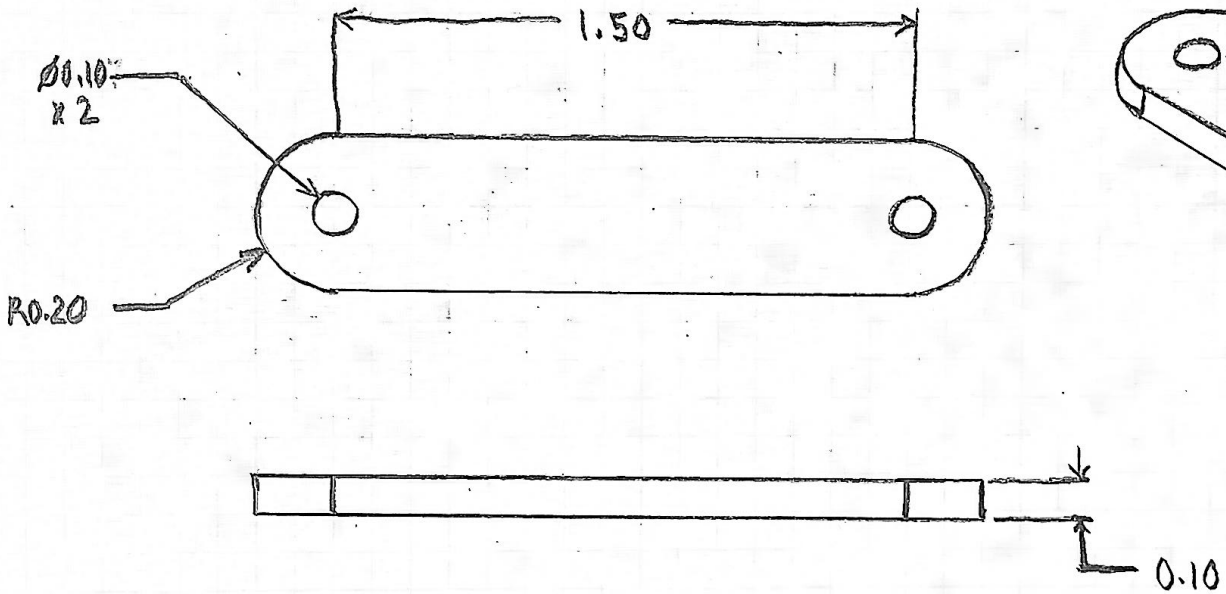

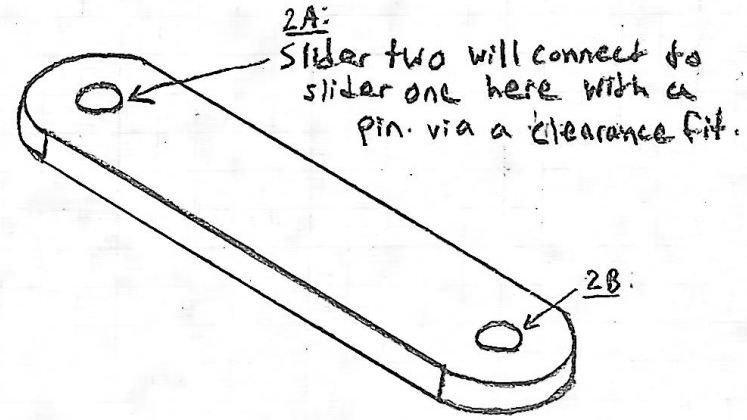

TITLE:	Slider Two
DRAWN	Bryce Addea
DESIGNED	Bryce Addea

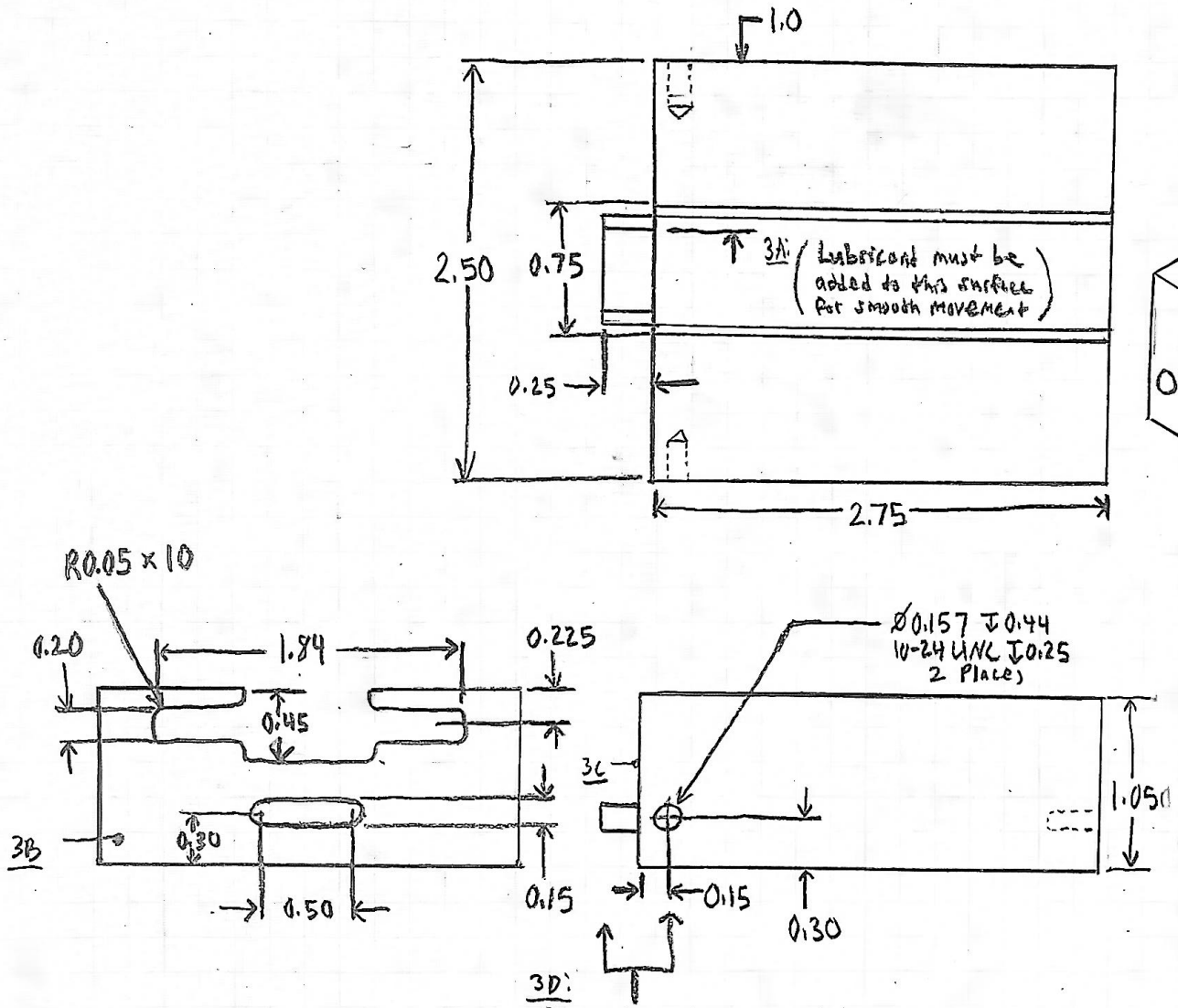

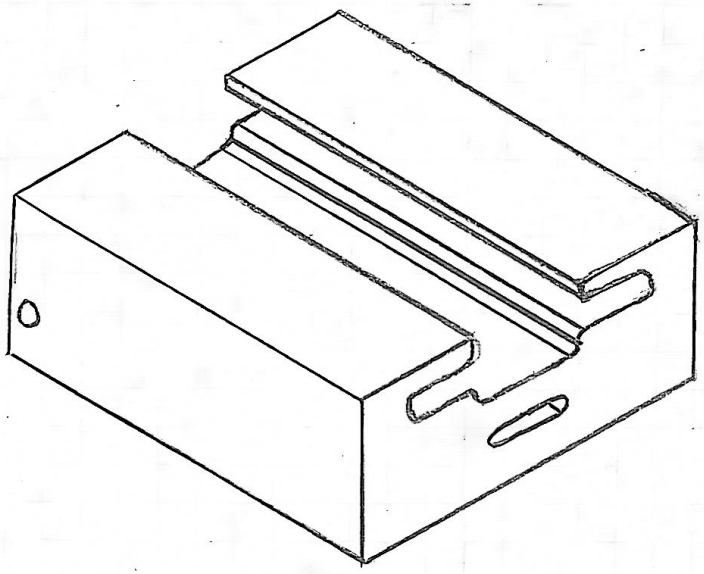

TITLE:	Slicer Base
DRAWN	Bryce Addeo
DESIGNED	Bryce Addeo

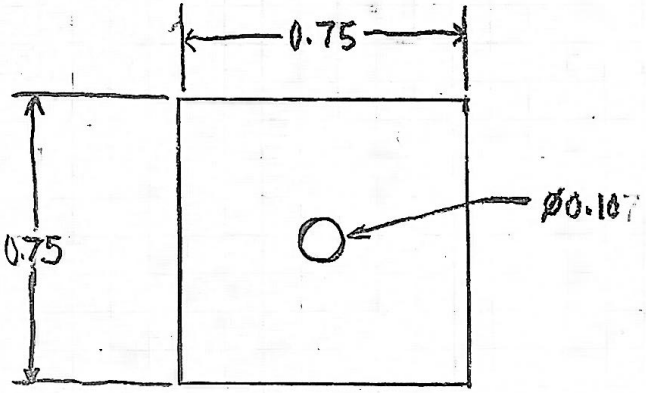

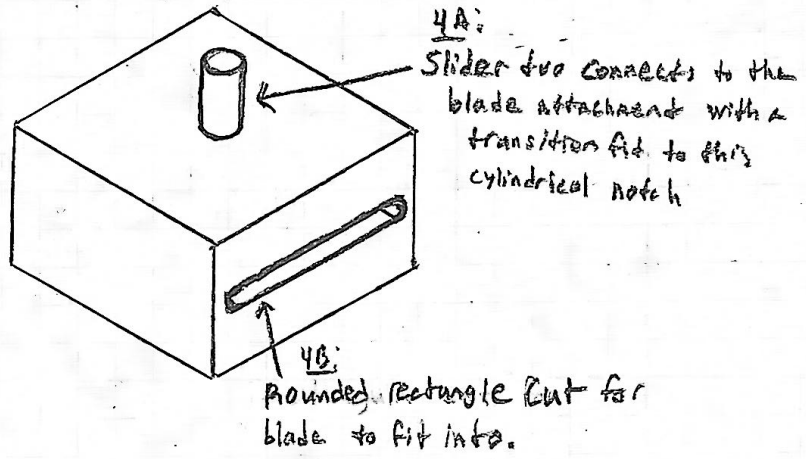

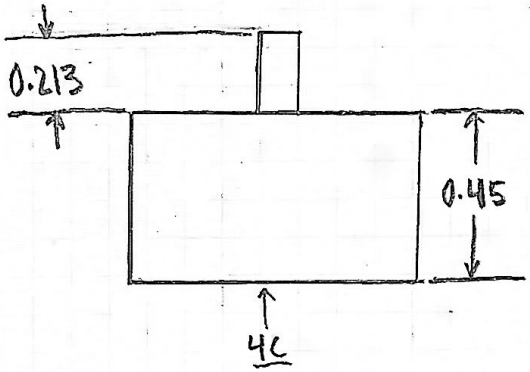

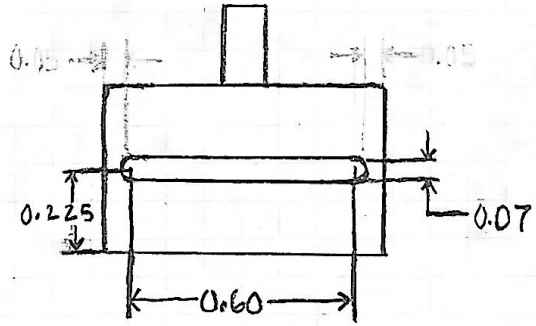

TITLE:	Blade Attachment
DRAWN	Bryce Addeo
DESIGNED	Bryce Addeo

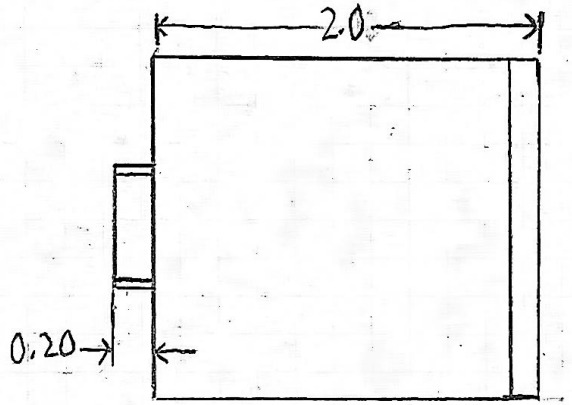

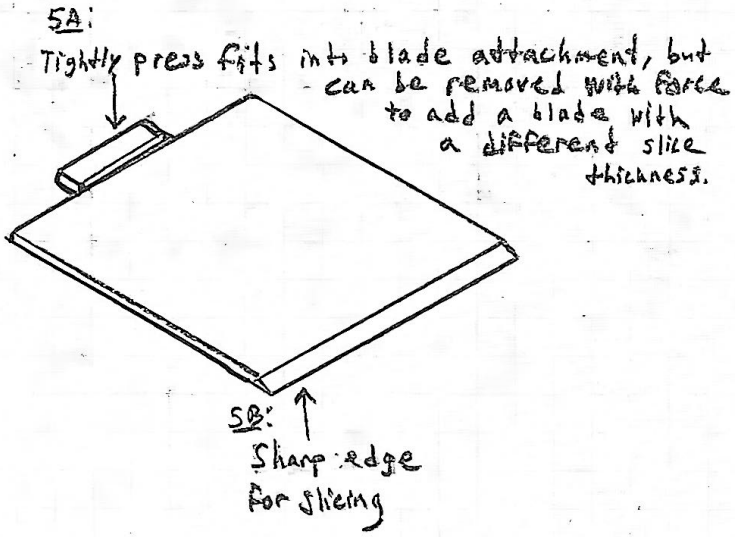

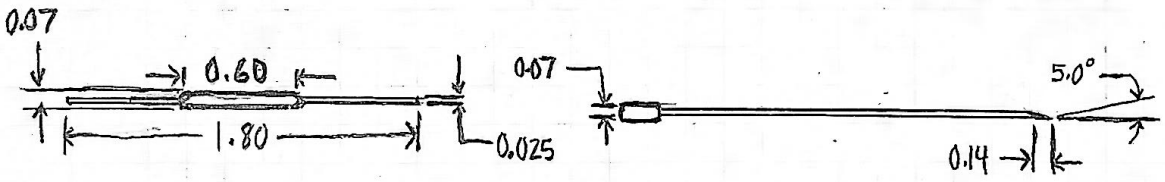

TITLE:	Blade
DRAWN	Bryce Addea
DESIGNED	Bryce Addea

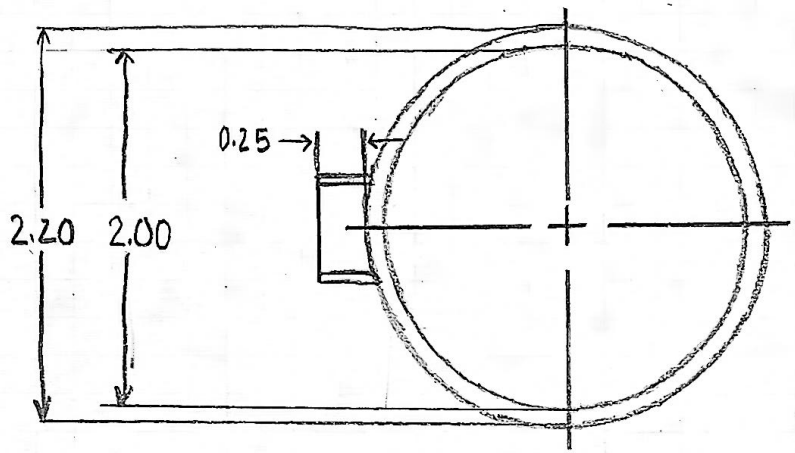

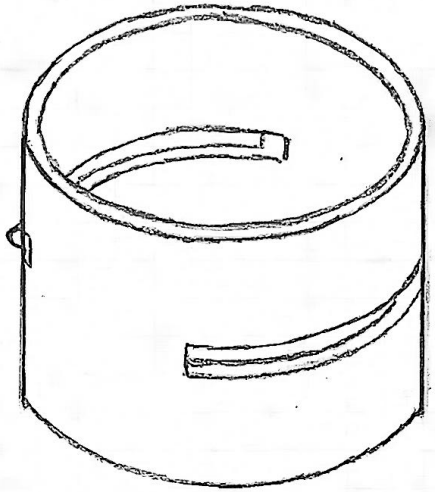

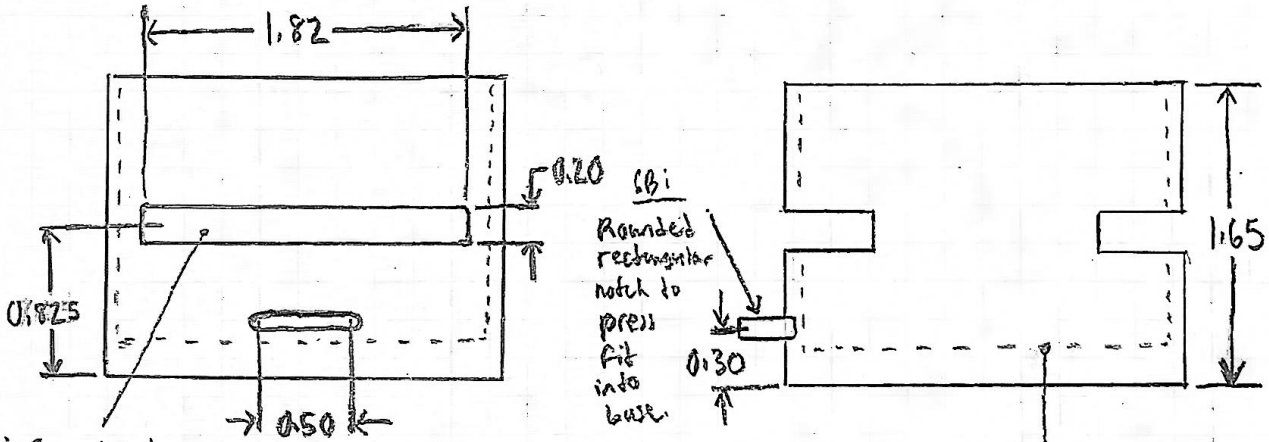

6A: Symmetrical holes on front and back for blade to travel through with no interference

6C: Bottom surface for food to rest on.

TITLE:	Food Holder
DRAWN	Bryce Addeo
DESIGNED	Bryce Addeo

Design Specifications Table

EML2322L Design Specification Table

Component (Name and/or Part Number)	Description / Size	Critical Surfaces (surface IDs and brief description)	Material	Vendor (if applicable)	Cost	Qty.	Justification / Notes
Slider One	1.4" x 0.4" x 0.1" (V = 0.056 in^3)	1A - Larger hole that connects to shank of shoulder screw. 1B - Smaller holes that connects to slider two via a pin. 1C - Bottom surface comes in partial contact with flywheel of air engine.	Stainless Steel 304	McMaster Carr	$0.30	1.00	Stainless steel 304 was selected for slider one because it is food-grade, corrosion resistant, easy to clean, durable and strong. All of these are important for a slider component that needs high strength as it drives motion and may come in contact with food. Additionally, this steel provides a good balance of affordability and performance. Cost: 6" x 0.5" x .125" = 0.375 in^3 --> (0.056 in^3 / 0.375 in^3)*$2.00 = **$0.30**
Slider Two	1.9" x 0.4" x 0.1" (V = 0.076 in^3)	2A - Hole that connects to slider one via a pin. 2B - Hole that connects to cylindrical notch of blade attachment.	Stainless Steel 304	McMaster Carr	$0.41	1.00	Stainless steel 304 was selected for slider two because it is food-grade, corrosion resistant, easy to clean, durable and strong. All of these are important for a slider component that needs high strength as it drives motion and may come in contact with food. Additionally, this steel provides a good balance of affordability and performance. Cost: 6" x 0.5" x .125" = 0.375 in^3 --> (0.076 in^3 / 0.375 in^3)*$2.00 = **$0.41**
Pin	0.1" x 0.15" Round (V = 0.0012 in^3)		Stainless Steel 304	McMaster Carr	$0.01	1.00	Stainless steel 304 was selected for the pin so that it matches the material of the sliders it connects together. This is important because the pin aids in their functionality and is subject to similar conditions. Cost: 6" x 0.5" x .125" = 0.375 in^3 --> (0.0012 in^3 / 0.375 in^3)*$2.00 = **$0.01**
Slicer Base	3.0" x 2.5" x 1.05" (V = 7.875 in^3)	3A - Internal surface that blade attachment moves across must be smooth and lubricated. 3B - Front surface must be smooth for contact with food holder. 3C - Back surface must be smooth for contact with air engine base. 3D - Rounded rectangular notch and screw holes to connect to air engine base.	Aluminum 6061-T6	McMaster Carr	$10.80	1.00	Aluminum 6061-T6 was selected for the slicer base because it is food safe and corrosion resistant, has a high strength to weight ratio, has good machinability, and is affordable. Since this is the largest component of the slicer, it was importnant to ensure a lightweight and affordable material was used without sacrificing strength. Cost: 6" x 6" x 1.25" = 45 in^3 --> (7.875 in^3 / 45 in^3)*$61.67 = **$10.80**
Blade Attachment	0.75" x 0.75" x 0.663" (V = .373 in^3)	4A - Cylindrical notch for slider two to connect. 4B - Rounded rectangular cut for blade to press fit into. 4C - Bottom surface of blade attachment that contacts surface of slicer base must be smooth for sliding.	Aluminum 6061-T6	McMaster Carr	$0.52	1.00	Aluminum 6061-T6 was selected for the blade attachment so that its material matches the base that it slides acorss since it will be subject to similar conditions and needs the same benefits of the material. Additionally, the good machinability aluminum is important for this component due to the complex geometries of this part such as the cylindrical notch out of the top and the rounded rectangular hole in the front. Cost: 6" x 6" x 1.25" = 45 in^3 --> (0.373 in^3 / 45 in^3)*$61.67 = **$0.52**
Blade	2.2" x 1.8" x 0.07" (V = 0.2772 in^3)	5A - Rounded rectangular notch to press fit into blade attachment. 5B - Sharp edge for slicing.	Stainless Steel (Grade 440C)	McMaster Carr	$28.54	1.00	Stainless steel (grade 440C) was selected for the blade as it is food safe, corrosion resistant, durable, long lasting, and has high hardness allowing for a very sharp edge. Despite the high cost, all these qualities are important for a blade that will be slicing a lot of food. Cost: 6" x 1" x .125" = 0.75 in^3 --> (0.2772 in^3 / 0.75 in^3)*$77.22 = **$28.54**
Food Holder	2.7" x 1.65" Round (Mass = 0.08 lbs)	6A - Holes to allow blade movement. 6B - Rounded rectangular notch to press fit into slicer base. 6C - Bottom surface of inside of food holder to support food.	PETG (glycol-modified PET)	Amazon	$0.49	1.00	PETG was selected for the food holder because this part has complex geometries and a larger size relative to other components that make it the best choice for the additive manufacturing/3D printed component. The benefits of this material include food safe, strong, easy to print, affordable, and good resistance to impact which are all important qualities for the function of this component. Cost: $13.28 for 2.2 lbs on Amazon --> (0.08 lbs / 2.2 lbs)*$13.28 = **$0.49**
Base Screws (91255A238)	#10-24 x 1/4" button head screw cap		Alloy steel	McMaster Carr	$1.36	4.00	Cost: $16.94 per pack of 50 --> $0.339 per fastener --> 4*$0.339 = **$1.36**
Double Washers (MS1013)	MS1013 conventional sliding dropout		304 stainless steel	Paragon Machine Works	$0.22	2.00	Cost: $1.07 per pack of 10 --> $0.107 per fastener --> 2*$0.107 = **$0.22**
				TOTAL	**$42.65**		