Design Report 2

Bryce Addeo, Anthony Weaver, Holden Kapsos, Krittin Jindamai

27 October 2024

EML2322L – Fall 2024

Objective Definitions:

1. **Total Cost**

   Definition: The sum of the costs for all components of slicer and labor for manufacturing.

   Description: This objective concerns the total cost needed to fully manufacture one of the conceptual designs. Specifically, the objective assesses the required cost of labor and individual components to produce the design. Cost is a fundamental factor of all engineering projects that must be considered, especially when a customer requires the product to be under a certain cost. It is a requirement just as important as other factors such as functionality or safety. In many real-world scenarios, budgets are a hard limit, so it is necessary to be under that budget if possible.

2. **Manufacturing Time**

   Definition: The total time required for an intermediate, student-level manufacturer to manufacture all the components of the slicer.

   Description: Manufacturing time refers to the total time it takes to convert the purchased materials into the components needed to assemble the food slicer by using machining techniques. The times to perform different tasks will be based on the ability of an intermediate, student machinist. This is an important objective because reducing manufacturing time will lead to lower production costs and increased overall efficiency. As a result, the assembled slicer will have a quicker delivery time to the market and therefore a competitive edge over other mass-produced products.

3. **Number of Components**

   Definition: The total number of parts that need to be manufactured and rapid-prototyped.

   Description: The number of components is the final total number of parts that need to be manufactured with machining or additive methods. The number of components in a project is an important factor to consider when designing and manufacturing, as it can affect many other aspects of the project. For example, if there are not enough parts it is hard for the project to function properly, and if there are too many parts then it is hard to manufacture and put together the entire project in a reasonable and timely manner. Being able to create a project with minimal components is time, energy and cost efficient and it makes assembling the entire project easier because there will be less parts to deal with.

4. **Safety**

Definition: The unlikeliness of the slicer to cause danger or harm to the user.

Description: Food slicer design safety is the unlikeliness of the slicer to cause danger or harm to the user. Safety is an important objective because the design will contain parts that usually consist of sharp edges necessary for slicing. If the slicer is not properly designed and manufactured to provide protection against the sharp edges of the blade, then users could be harmed. There are many ways to account for design safety. However, to make the safety of the design quantifiable, the design safety will be ranked based on percentage of blade exposure.

5. **Range of Motion**

Definition: Total horizontal distance that the blade can move during operation.

Description: The range of motion of the slicer refers to the total distance that the blade can move during operation. For this specific slicer, horizontal motion is of utmost importance and will be evaluated quantitatively. Range of motion was deemed an important objective because it determines the variety of foods that can be sliced. A greater range of motion increases the versatility of the slicer, enabling it to slice larger foods in addition to smaller foods. Without a sufficient range of motion, the slicer will have a limited range of food sizes it can slice, reducing its overall utility and value.

Air-Engine Food Slicer

Bryce Addeo

Total Cost	Manufacturing Time	Number of Components	Safety	Range of Motion
A	A	A	A	A
	B	B	B	E
		C	D	E
			D	E
				E

	Category	Count	%
A	Total Cost	4	40
B	Manufacturing Time	2	20
C	Number of Components	0	0
D	Safety	1	10
E	Range of Motion	3	30

Krittin Jindamai

Total Cost	Manufacturing Time	Number of Components	Safety	Range of Motion
A	A	A	A	A
	B	C	D	B
		C	D	E
			D	D
				E

	Category	Count	%
A	Total Cost	4	40
B	Manufacturing Time	1	10
C	Number of Components	1	10
D	Safety	3	30
E	Range of Motion	1	10

Anthony Weaver

Total Cost	Manufacturing Time	Number of Components	Safety	Range of Motion
A	A	A	A	A
	B	C	D	B
		C	D	C
			D	D
				E

	Category	Count	%
A	Total Cost	4	40
B	Manufacturing Time	1	10
C	Number of Components	2	20
D	Safety	3	30
E	Range of Motion	0	0

Holden Kapsos

Total Cost	Manufacturing Time	Number of Components	Safety	Range of Motion
A	A	A	A	A
	B	B	D	E
		C	D	C
			D	D
				E

	Category	Count	%
A	Total Cost	4	40
B	Manufacturing Time	1	10
C	Number of Components	1	10
D	Safety	3	30
E	Range of Motion	1	10

Objective	%
Total Cost	40
Manufacturing Time	12.5
Number of Components	10
Safety	25
Range of Motion	12.5

Group 4A Food Slicer Decision Matrix

Food Slicer Design			Design 1			Design 2			Design 3			Design 4		
Objective	Weighting Factor	Parameter	Mag.	Score	Value	Mag.	Score	Value	Mag.	Score	Value	Mag.	Score	Value
Total Cost	0.40	$	46.95	8.2	3.3	65.34	5.9	2.4	66.00	5.9	2.3	38.63	10.0	4.0
Manufacturing Time (beg)	0.125	hours	16.9	5.3	0.666	33.5	2.7	0.336	9	10.0	1.3	22.6	4.0	0.498
Number of Components	0.10	#	6.0	10.0	1.0	10.0	6.0	0.6	6.0	10.0	1.0	10.0	6.0	0.6
Safety (Blade Exposure)	0.25	%	0.14	8.6	2.2	0.91	0.9	0.2	0	10.0	2.5	1	0.0	0.0
Range of Motion	0.125	inches	2.50	5.6	0.7	4.00	8.9	1.1	4.10	9.1	1.1	4.50	10.0	1.3
Overall value					**7.8**			**4.6**			**8.2**			**6.3**

Name	Design Number
Bryce Addeo	1
Krittin Jindamai	2
Anthony Weaver	3
Holden Kapsos	4

Appendix A: Scoring Justifications and Calculations

Objective Scoring Calculation Examples:

Total Cost:

Design 4 Cost: $38.63

Design 2 Cost: $65.34

Design 4 Score: 10.0 (highest score)

Design 2 Score: ($38.63 / $65.34)*10 = 5.9

Manufacturing Time:

Design 3 Time: 9.0 hrs

Design 4 Time: 22.6 hrs

Design 3 Score: 10.0 (highest score)

Design 4 Score: (9.0 hrs / 22.6 hrs)*10 = 4.0

Number of Components:

Design 1 #: 6

Design 2 #: 10

Design 1 Score: 10.0 (highest score)

Design 2 Score: (6 / 10)*10 = 6.0

Safety (% of blade exposure):

Design 3 %: 0%

Design 1 % = 14%

Design 3 Score: 10.0 (highest score)

Design 1 Score: 10 – ((.14-0)*10) = 8.6

Range of Motion:

Design 4 RoM: 4.5 in

Design 1 RoM: 2.5 in

Design 4 Score: 10.0 (highest score)

Design 1 Score: (2.5 / 4.5 in)*10 = 5.6

Scoring Justifications:

Total Cost Justification:

The cost justifications were determined by the cost required to manufacture the necessary parts for each design. The design with the lowest cost received a score of 10.0. Other scores were determined as a fraction of the lowest cost design cost over the evaluated design cost multiplied by ten. The order of cheapest design to most expensive is as follows: Design 4, Design 1, Design 2, Design 3.

Manufacturing Time Justification:

The manufacturing time justifications were determined by the total amount of time required to manufacture all parts for each design. The design with the shortest amount of time to manufacture all parts received a score of 10.0. Other scores were determined as a fraction of the shortest time design time over the evaluated design time multiplied by ten. The order of shortest manufacturing time design to longest is as follows: Design 3, Design 1, Design 4, Design 2.

Number of Components Justification:

The number of components justification was determined by the total number of components that need to be manufactured for the design. The design with the fewest number of manufactured components received a 10.0. Other scores were determined as a fraction of the fewest number of components design number of components over the evaluated design number of components multiplied by ten. The order of the fewest number of components design to most is as follows: Design 1/ Design 3, Design 2/ Design 4.

Safety (% of blade exposure) Justification:

The safety justifications were determined by the percent blade exposure during operation. The design with the percent blade exposure received a score of 10.0. Other scores were determined as an equation that subtracts the evaluated design percent blade exposure minus the lowest percent

blade exposure times ten from ten. The order of lowest percent blade exposure to highest percent is as follows: Design 3, Design 1, Design 2, Design 4.

Range of Motion Justification:

The range of motion justifications were determined by the horizontal distance the blade can travel for each design in inches. The design with the highest range of motion received a 10.0. Other scores were determined as a fraction of the evaluated design range of motion over the highest range of motion multiplied by ten. The order of highest range of motion to lowest is as follows: Design 4, Design 3, Design 2, Design 1.

Cost Calculations

Price: Design 1					
Component:	Material:	Stock:	Stock Volume:	Component Volume:	Cost:
Slicer Base	Aluminum 6061	6"x3"x2"	36 in^3	7.875 in^3	(7.875 in^3 / 36 in^3)*$46.77 = $10.23
Slider One	Stainless Steel 304	6"x1/2"x1/8"	0.375 in^3	0.056 in^3	(0.056 in^3 / 0.375 in^3)*$2.00 = $0.30
Slider Two	Stainless Steel 304	6"x1/2"x1/8"	0.375 in^3	0.076 in^3	(0.076 in^3 / 0.375 in^3)*$2.00 = $0.41
Blade Attachment	Aluminum 6061	6"x3/4"x3/4"	3.375 in^3	0.254 in^3	(0.254 in^3 / 36 in^3)*$5.67 = $0.43
Blade	Stainless Steel 440C	6"x2"x1/16"	0.75 in^3	0.2772 in^3	(0.2772 in^3 / 0.75 in^3)*$90.09 = $33.30
Food Holder	PETG	-	2.2 lbs (weight)	0.08 lbs (weight)	(0.08 lbs / 2.2 lbs) *13.28 = $0.49
OTS Components:	Material:	Size:	Vendor:	Quantity:	Cost:
Screws	Alloy Steel	#10-24 x 1/4"	McMaster Carr	4	$16.94 per pack of 50 --> $0.339 per fastener --> 4*$0.339 = $1.36
Double Washers	304 Stainless Steel	MS1013	Paragon Machine Works	2	$1.07 per pack of 10 --> $0.107 per fastener --> 2*$0.107 = $0.22
Pins	304 Stainless Steel	0.1"x0.55"	Amazon	2	$6.69 for 100 --> (2/100)*$6.69 = $0.14
				Total Cost	**$ 46.88**

Price: Design 2					
Component:	Material:	Stock:	Stock Volume:	Component Volume:	Cost:
Base	Aluminun 6061-T6	1 1/4" x 2 1/2" x 24"	75 in^3	37.1 in^3	(37.1 in^3 / 75 in^3) * $55.1 = $27.26
Flywheel	Carbon Steel	5" diameter x 3" lenght	58.9 in^3	8.83 in^3	(8.83 in^3 / 58.9 in^3) * $46.79 = $7
Vegetable Base	Aluminun 6061-T6	0.06" x 12" x 48"	34.56 in^3	0.483 in^3	(0.483 in^3 / 34.56 in^3) * $3.31 = $0.046
Knife	304 Stainless Steel	0.06" x 12" x 48"	34.56 in^3	0.2116 in^3	(0.2116 in^3 / 34.56 in^3) * $133.33 = $0.816
Blade Lock (2)	Aluminun 6061-T6	0.1" x 2" x 48"	9.6 in^3	0.105 in^3	(0.105 in^3 / 9.6 in^3) * $18.53 * 2 = $0.405
Connecting Rod 1	Aluminun 6061-T6	3/8" x 1/2" x 2'	4.5 in^3	0.7662 in^3	(0.7662 in^3 / 4.5 in^3) * $16.5 = 2.81
Connecting Rod 2 (3)	Aluminun 6061-T6	3/8" x 1/2" x 2'	3.75 in^3	0.7662 in^3, 0.6923 in^3, 0.6186 in^3	(0.7662 in^3 / 4.5in^3) * $16.5 = $2.81, (0.6923 in^3 / 4.5 in^3) * $16.5 = $2.54, (0.6168 in^3 / 4.5 in^3) * $16.5 = $2.26
Container	PLA Filament	-	-	1.8416 in^3	Filament cost: $23.99/kg, PLA density:1.25 g/cc = 0.02 kg/in^3; container is 1.8416 in^3; cost = 0.02*1.8416*23.99 = $0.8836
OTS Components:	Material:	Size:	Vendor:	Quantity:	Cost:
Flywheel Screw	18-8 Stainless Steel	10-24 x 1/2 inch Left-Hand Threaded Shoulder Screw	McMaster Carr	1	$4.05
Thrust Bearing	841 Bearing Bronze	1/4" ID x 5/8" OD x 1/16" Thick	McMaster Carr	1	$2.47
Low Friction Thrust Bearing	841 Bearing Bronze	1/4" ID x 3/8" OD x 1/4" Long	McMaster Carr	1	$1.05
Left- Hand Threaded Screw	18-8 Stainless Steel	10-24 thread, 1/4" x 1/2" Long	McMaster Carr	1	$4.05
Hex Head Drilling Screw	7075 Aluminum	16 TPI, No. 10, 1/2" Long	McMaster Carr	2	$10.52 per pack of 10; $ 1.052 per screw = $2.1
Hex Head Screw	Steel	1/4" UNC, 7/16" Long	McMaster Carr	2	$12.9 per pack of 25; $0.516 per screw = $1.03
Locknut	Zinc-Plated Steel	1/4" UNC, 7/16" W x 5/16" H	McMaster Carr	2	$6.31 per pack of 100; $0.0631 per nut = $0.13
Flanged Socket Head Screw	18-8 Stainless Steel	8-32 Thread Size, 9/16" Long	McMaster Carr	1	$2.83
Steel Wing Nut	8-32 Thread Size, 13/32" Diameter	-	McMaster Carr	1	$18.57 per pack of 100; $0.1857 per nut
				Total Cost	**$ 65.34**

Price: Design 3					
Component:	Material:	Stock:	Stock Volume:	Component Volume:	Cost:
Scotch Yoke	A36 (Low Carbon Steel)	4" x 4" x 0.5"	8 in^3	1.158 in^3	(1.158 in^3/8 in^3)*$22.16 = $3.21
SY Guidepath	Aluminum 6061-T6	2.00" x 48.00" x 0.375"	36 in^3	0.525 in^3	(0.525 in^3/36 in^3)*$33.96 = $0.50
Lever	A36 (Low Carbon Steel)	4.00" x 4.00" x 0.125"	2 in^3	0.15 in^3	(0.15 in^3/2 in^3)*$12.27 = $0.92
Base	Aluminum 6061-T6	8.00" x 8.00" x 0.25"	16 in^3	8.45 in^3	(8.45 in^3/16 in^3)*$21.43 = $11.40
Food Holder	Aluminum 6061-T6	6.00" x 48.00" x 1.75"	504 in^3	55.018 in^3	(55.018 in^3/504 in^3)*$369.56 = $40.34
Cover	3D Printed PLA	N/A	N/A	61.458 in^3	25$/kg for PLA Filament; 0.12 kg as modeled by SOLIDWORKS = $3.00
OTS Components:	Material:	Size:	Vendor:	Quantity	Cost:
Shoulder Screw	Alloy Steel	10-24 thread, 3/8" x 1" long shoulder screw	McMaster Carr	1	$1.88 if buying between 1-4; 1 needed
Hex Screws	316 Stainless Steel	10-24 thread, 0.361" x .5" long Hex Drive Screw	McMaster Carr	6	$8.69 for 25; $0.35 for 1; $2.10 for 6
Hex Screws	316 Stainless Steel	10-24 thread, 0.361" x 1" long Hex Drive Screw	McMaster Carr	3	$12.64 for 25; $0.51 for 1; $1.53 for 3
Hex Nuts	Zinc-Plated Steel	10-24 Thread, 3/8" x 1/8" Nut	McMaster Carr	2	$2.33 for 100; $0.02 for 1; $0.04 for 2
Razor Blades	Stainless Steel	1/2" x 3/4" x 0.009" Blade	McMaster Carr	6	$18.31 for 100; $0.18 for 1; $1.08 for 6
				Total Cost	**$ 66.00**

Price: Design 4					
Component:	Material:	Stock:	Stock Volume:	Component Volume:	Cost:
Modified Base	Aluminum 6061-T6	2.5" x 0.625" x 6'	112.5 in^3	17.1875 in^3	(17.1875 in^3 / 112.5 in^3)*$85.00 = $12.98
Side Panel	Aluminum 6061-T6	2.5" x 0.625" x 1'	18.75 in^3	6.55875 in^3	2*(6.55875 in^3 / 18.75 in^3)*$9.75 = $6.82
Yoke	Aluminum 6061-T6	2.5" x 0.625" x 1'	18.75 in^3	0.421875 in^3	(0.421875 in^3 / 18.75 in^3)*$9.75 = $0.22
Blade	304 Stainless Steel	3" x 3" x 0.25"	2.25 in^3	0.625 in^3	(0.625 in^3 / 2.25 in^3)*$17.89 = $4.97
Housing	Aluminum 6061-T6	1.5" x 0.375" x 6"	3.375 in^3	1.35 in^3	(1.35 in^3 / 3.375 in^3)*$5.05 = $2.02
Lever Arm	Aluminum 6061-T6	0.25" x 0.5" x 6"	0.75 in^3	0.6 in^3	(0.6 in^3 / 0.75 in^3)*5.05 = $4.04
Food Table	3D Printed PLA	-	$0.24/in^3	3.5625 in^3	$0.24 / in^3 * 3.5625 in^3 = $0.86
OTS Components:	Material:	Size:	Vendor:	Quantity:	Cost:
Screws	Stainless Steel	#10-24 x 1/4"	Amazon	8	$3.99 per pack of 12 --> $0.33 per fastener --> 8*$0.33 = $2.64
Short Pin	Stainless Steel	3/8" shaft diam, 1" long	McMaster Carr	2	$8.95 per pack of 5 --> $1.79 per pin --> 2*$1.79 = $3.58
Long Pin	Stainless Steel	1/4" shaft diam, 1.5" long	McMaster Carr	1	$12.50 per pack of 25 --> $0.50 per pin --> 1*$0.50 = $0.50
				Total Cost	**$ 38.63**

Manufacturing Time Estimations for Design 1

Part Name / Number: Slicer Base

MANUFACTURING PROCESS	Student Experience Level	
	BEGINNER [min]	INTERMEDIATE [min]
mark & cut 2" x 3" rectangular bar stock on bandsaw	12	7
mark & cut 2" x 3" rectangular bar stock on bandsaw	12	7
load part and endmill into mill	8	5
mill part to final (3.05") length [A]	20	15
rotate part and reload into vise	3	2
mill part to final (1.05") height [B]	20	15
rotate part and reload into vise	3	2
mill part to final (2.5") width [C]	20	15
face first pair of sides (2" x 3") [D]	10	7
face second pair of sides (2" x 3") [E]	15	12
endmill cylindrical notch on back [F]	15	12
machine internal profile into part [G]	40	35
find X, Y zeros using edgefinder	10	8
drill and tap (1) 10-24 threaded holes, 0.25" deep [H]	15	12
turn part 180-deg and reload into vise	3	2
find X, Y zeros using edgefinder	10	8
drill and tap (1) 10-24 threaded hole, 0.25" deep [I]	15	12
turn part 90-deg and reload into vise	3	2
find X, Y zeros using edgefinder	10	8
endmill cylindrical hole in front [J]	15	12
time to debur part between steps	15	10
time to clean machine when finished	10	8
ESTIMATED MANUFACTURING TIME: [min]	**284**	**216**
[hr]	**4.7**	**3.6**

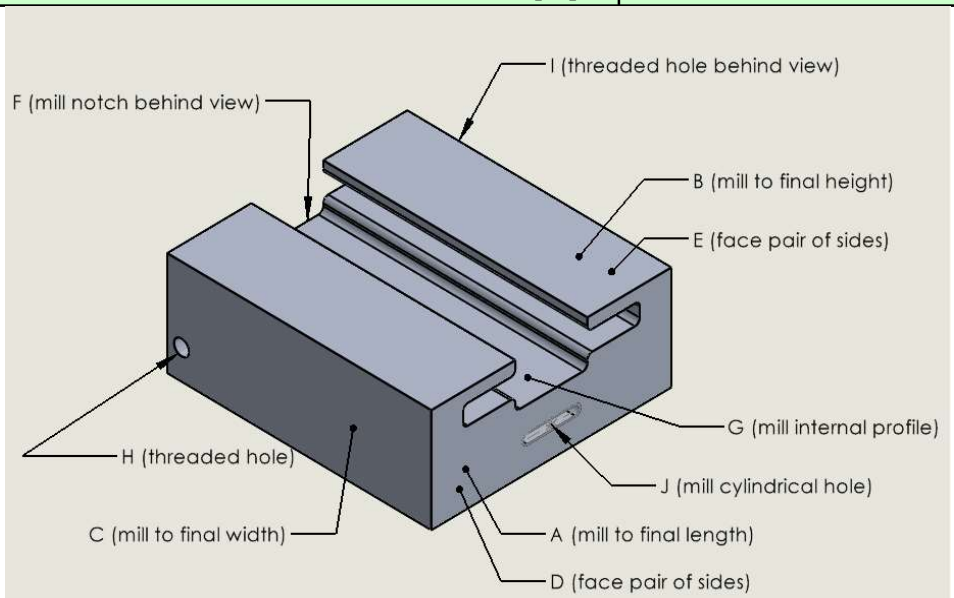

Part Name / Number: Slider 1

MANUFACTURING PROCESS	Student Experience Level BEGINNER [min]	INTERMEDIATE [min]
mark & cut 1/8" x 1/2" rectangular bar stock on bandsaw	12	7
load part and endmill into mill	8	5
face first pair of sides (1/8" x 1/2") [A]	10	7
mill part to final (1.4") length [B]	20	15
face second pair of sides (1/8" x 1/2") [C]	15	12
find X, Y zeros using edgefinder	10	8
drill (1) #10 clearance hole, thru [D]	10	7
drill (1) #10 clearance hole, 0.05" deep [E]	10	7
time to debur part between steps	15	10
time to clean machine when finished	10	8
ESTIMATED MANUFACTURING TIME: [min]	**120**	**86**
[hr]	**2.0**	**1.4**

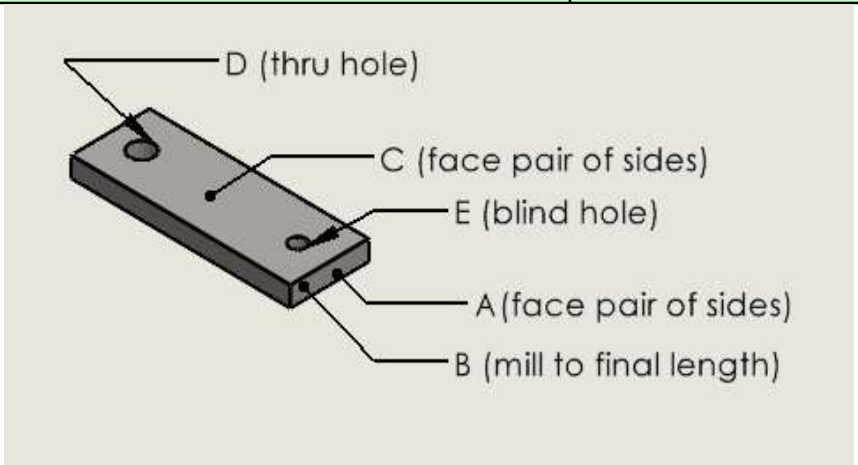

Part Name / Number: Slider 2

MANUFACTURING PROCESS	Student Experience Level BEGINNER [min]	INTERMEDIATE [min]
mark & cut 1/8" x 1/2" rectangular bar stock on bandsaw	12	7
load part and endmill into mill	8	5
face first pair of sides (1/8" x 1/2") [A]	10	7
mill part to final (1.9") length [B]	20	15
face second pair of sides (1/8" x 1/2") [C]	15	12
find X, Y zeros using edgefinder	10	8
drill (2) #10 clearance hole, thru [D]	20	14
time to debur part between steps	15	10
time to clean machine when finished	10	8
ESTIMATED MANUFACTURING TIME: [min]	**120**	**86**
[hr]	**2.0**	**1.4**

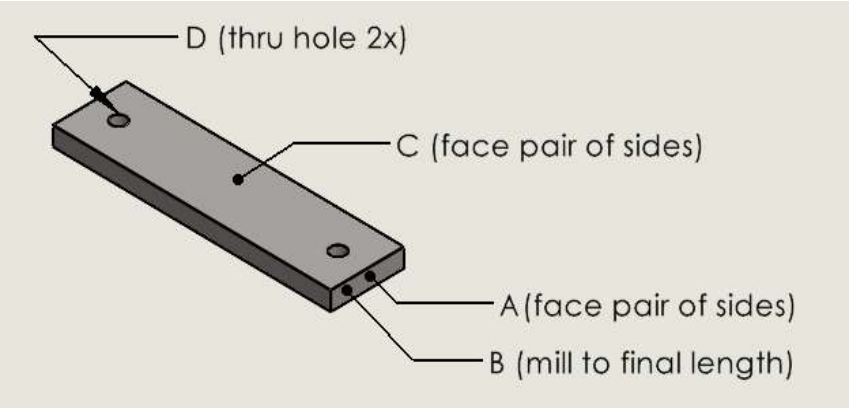

Part Name / Number: Blade Attachment

MANUFACTURING PROCESS	Student Experience Level	
	BEGINNER [min]	INTERMEDIATE [min]
mark & cut 3/4" x 3/4" rectangular bar stock on bandsaw	12	7
load part and endmill into mill	8	5
face first pair of sides (3/4" x 3/4") [A]	10	7
face second pair of sides (3/4" x 3/4") [B]	15	12
mill part to final (0.45") height [C]	20	15
find X, Y zeros using edgefinder	10	8
endmill cylindrical hole in front [D]	20	15
rotate part and reload into vise	3	2
drill (1) #10 clearance hole, 0.1" deep [E]	10	7
time to debur part between steps	15	10
time to clean machine when finished	10	8
ESTIMATED MANUFACTURING TIME: [min]	**133**	**96**
[hr]	**2.2**	**1.6**

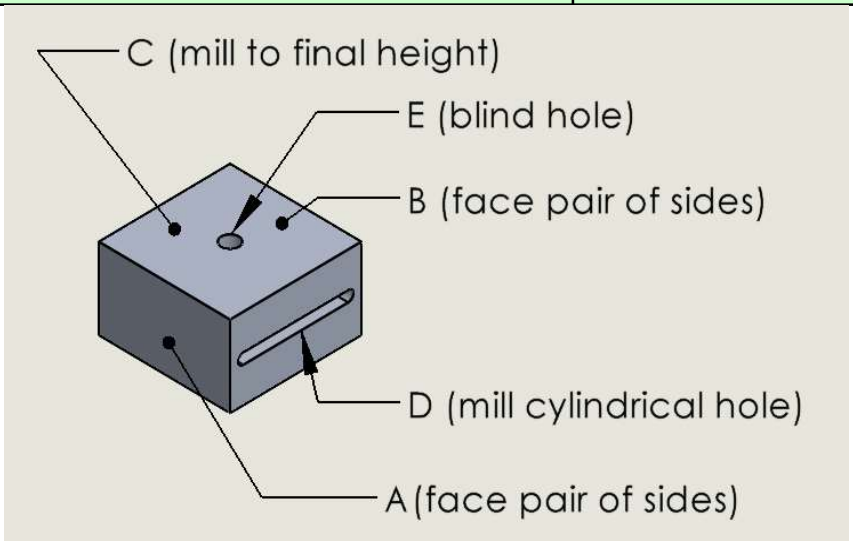

Part Name / Number: Blade

MANUFACTURING PROCESS	Student Experience Level BEGINNER [min]	INTERMEDIATE [min]
mark & cut 1/16" sheet stock on bandsaw	12	7
mark & cut 1/16" sheet stock on bandsaw	12	7
load part and endmill into mill	8	5
face first pair of sides (1/16" sheet) [A]	10	7
mill part to final (2.2") length [B]	20	15
face second pair of sides (1/16" sheet) [C]	15	12
endmill cylindrical notch on back [D]	20	15
endmill to remove top face of blade [E]	20	15
rotate part and reload into vise	3	2
endmill to remove bottom face of blade [F]	20	15
face pair of blade sides (0.025") [G]	20	15
sharpen blade with file and sand paper wheel [H]	20	15
time to debur part between steps	15	10
time to clean machine when finished	10	8
ESTIMATED MANUFACTURING TIME: [min]	**205**	**148**
[hr]	**3.4**	**2.5**

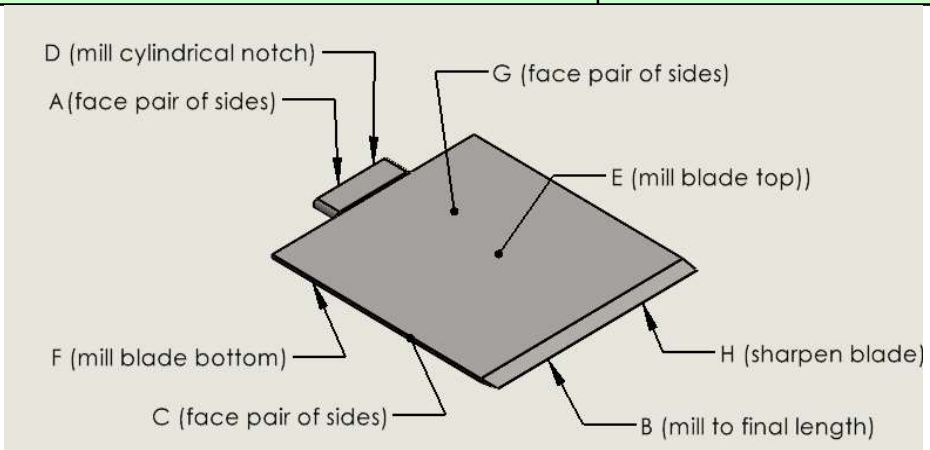

Part Name / Number: Food Holder

MANUFACTURING PROCESS	Student Experience Level BEGINNER [min]	INTERMEDIATE [min]
Slice CAD model	30	20
Load G-code onto printer	7	5
Set up filament and build plate	25	15
Print part	60	60
ESTIMATED MANUFACTURING TIME: [min]	**122**	**100**
[hr]	**2.0**	**1.7**

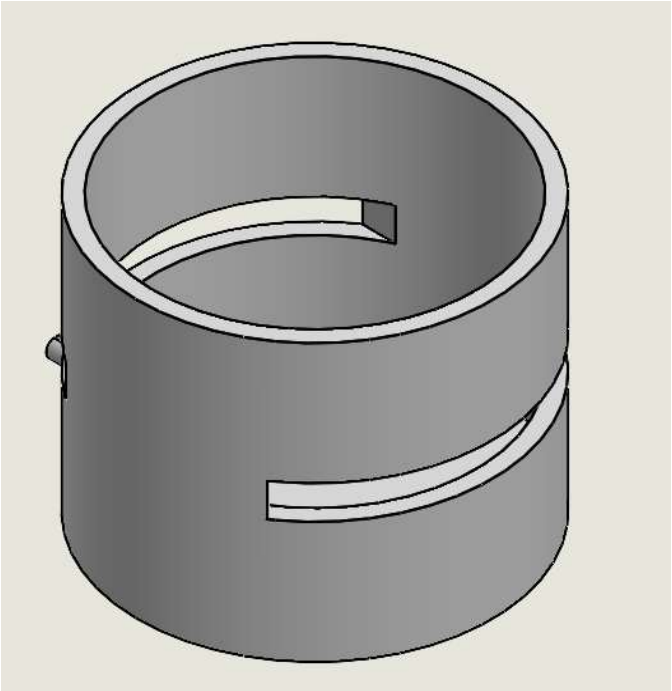

Part Name / Number: Pin 1

MANUFACTURING PROCESS		Student Experience Level BEGINNER [min]	INTERMEDIATE [min]
mark and cut OTS 0.1" diameter steel pin		15	10
file cut edge until smooth [A]		5	3
ESTIMATED MANUFACTURING TIME:	**[min]**	**20**	**13**
	[hr]	**0.3**	**0.2**

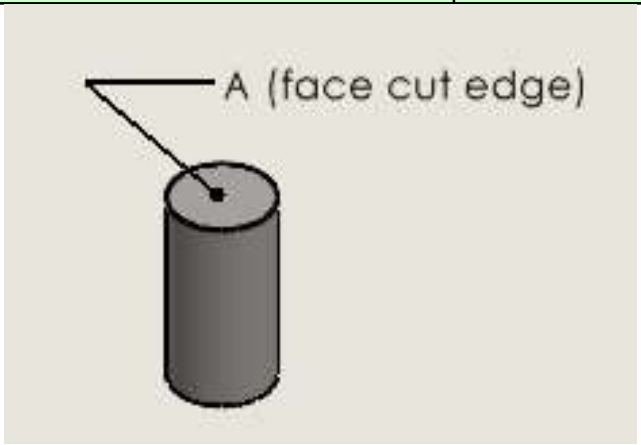

Part Name / Number: Pin 2

MANUFACTURING PROCESS	Student Experience Level BEGINNER [min]	INTERMEDIATE [min]
mark and cut OTS 0.1" diameter steel pin	15	10
file cut edge until smooth [A]	5	3

ESTIMATED MANUFACTURING TIME:	**[min]**	**20**	**13**
	[hr]	**0.3**	**0.2**

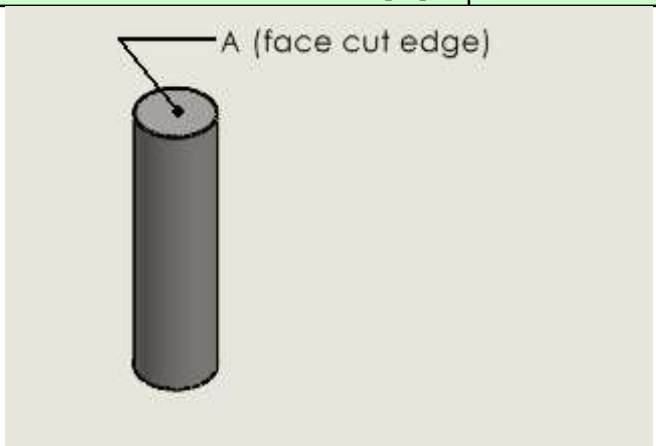

Manufacturing Time Estimations for Design 2

Part Name / Number: Base

MANUFACTURING PROCESS	Student Experience Level	
	BEGINNER [min]	INTERMEDIATE [min]
mark & cut aluminum bar stock on bandsaw	10	5
Program NC code using CAM software for extruded cuts	240	60
Post process code and load onto machine	20	10
Build tooling and load into machine	90	30
Install and probe workpiece	20	10
Machine operation 2	10	10
Clean machine	20	10
load part into milling machine	3	1
load tool (endmill, drill chuck, etc.) into milling machine	3	1
Mill part to final height (1.06") [A]	20	15
Mill part to final height (0.6") [B]	20	15
drill and tap (2) No.10-24 threaded hole, thru [C]	25	20
drill (1) 0.361" clearance hole, thru [D]	20	12
counterbore (1) hole, 0.300" deep [E]	10	7
ream (1) 0.377" clearance hole, thru [D]	10	7
time to debur part betweeb steps	5	3
time to clean machine when finished	7	5
ESTIMATED MANUFACTURING TIME: [min]	**533**	**221**
[hr]	**8.9**	**3.7**

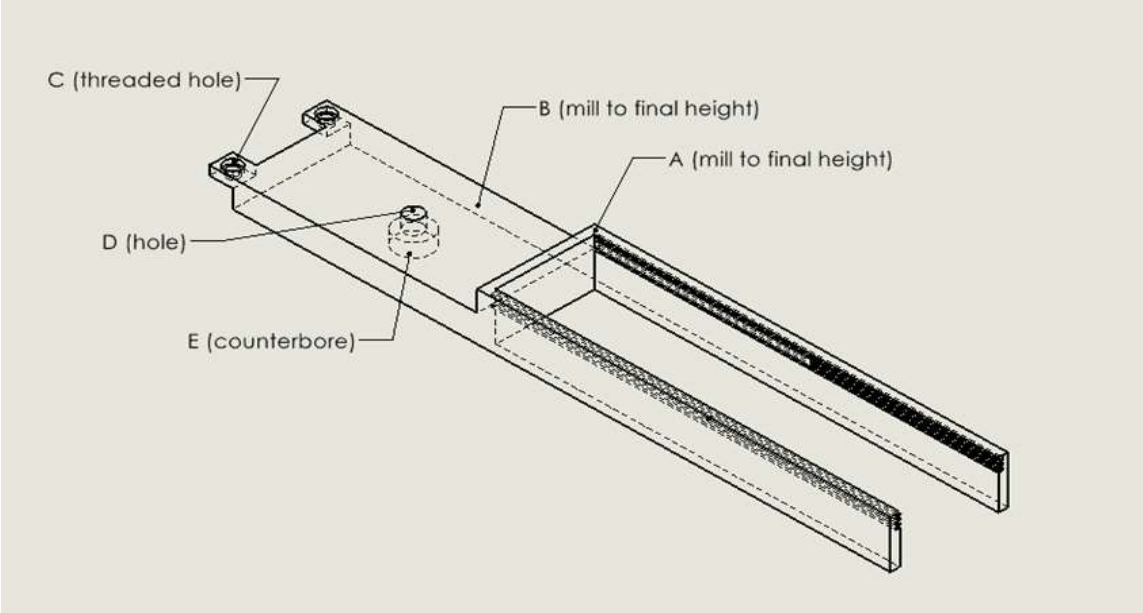

Part Name / Number: Flywheel

MANUFACTURING PROCESS	Student Experience Level	
	BEGINNER [min]	INTERMEDIATE [min]

mark & cut steel round stock on bandsaw	15	10
load part and cutting tool into lathe	8	5
face one end of part [A]	5	3
turn part diameter	35	20
drill and tap 10-24 center hole, 0.5" deep [B]	25	15
load part into milling machine	3	1
load tool (endmill, drill chuck, etc.) into milling machine	3	1
find X, Y zeros using edgefinder	10	8
drill (4) 0.100" clearance hole, thru [C]	35	25
time to debur part between steps	15	10
time to clean machine when finished	10	8
ESTIMATED MANUFACTURING TIME: [min]	**164**	**106**
[hr]	**2.7**	**1.8**

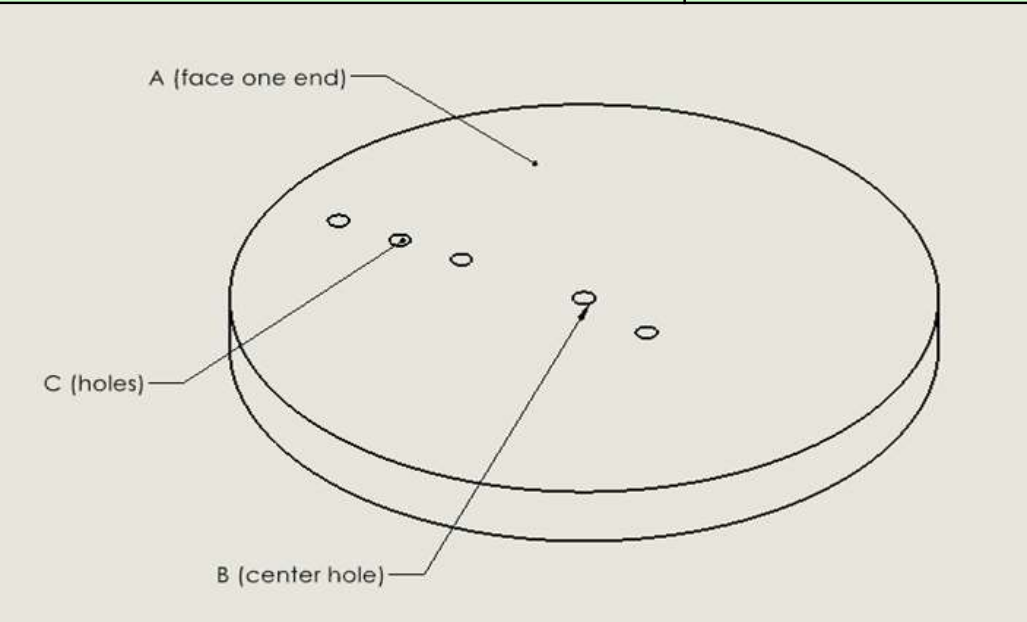

Part Name / Number: Connecting Arm 1

MANUFACTURING PROCESS	Student Experience Level BEGINNER [min]	INTERMEDIATE [min]
mark & cut steel bar stock on bandsaw	15	10
load part into milling machine	8	5
load tool (endmill, drill chuck, etc.) into milling machine	3	1
mill part to final length (0.3") [A]	15	10
face first pair of sides (3.35") [B]	15	10
face second pair of sides (0.1") [C]	15	10
face third pair of sides (0.35") [D]	15	10
find X, Y zeros using edgefinder	10	8
drill 0.156" hole, thru [E]	25	15
counterbore 0.3125" 0.14" deep [F]	25	15
drill and tap 0.161" hole, thru [F]	25	15

time to debur part between steps		15	10
time to clean machine when finished		10	8
ESTIMATED MANUFACTURING TIME:	**[min]**	**196**	**127**
	[hr]	**3.3**	**2.1**

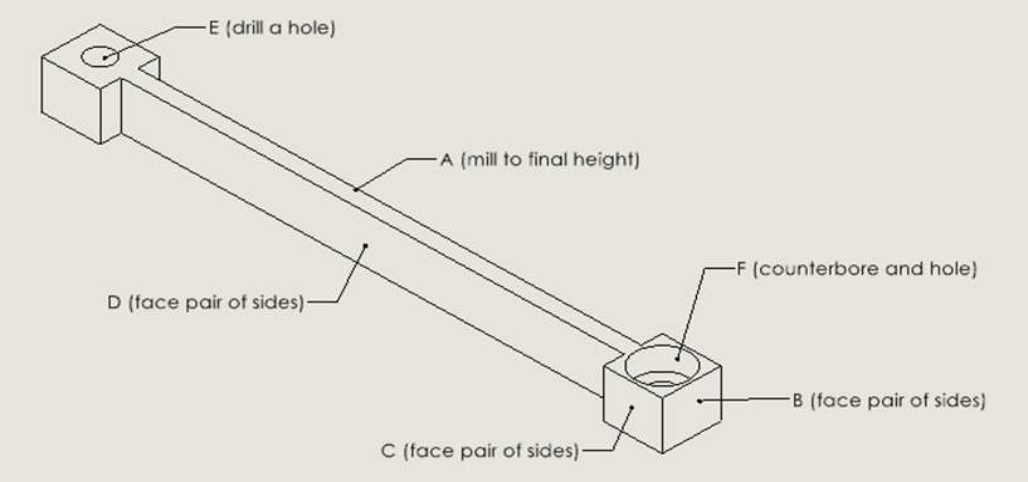

Part Name / Number: Connecting Arm 2

MANUFACTURING PROCESS	**Student Experience Level**	
	BEGINNER	**INTERMEDIATE**
	[min]	**[min]**
mark & cut steel bar stock on bandsaw	15	10
load part into milling machine	8	5
load tool (endmill, drill chuck, etc.) into milling machine	3	1
mill part to final length (0.3") [A]	15	10
face first pair of sides to (5.11 / 4.62 / 4.12") [B]	15	10
face second pair of side s to 0.1" [C]	15	10
face third pair of side s to 0.35" [D]	15	10
find X, Y zeros using edgefinder	10	8
drill 0.156" hole, thru [E]	25	15
counterbore 0.3125" 0.14" deep [F]	25	15
drill and tap 0.161" hole, thru [F]	25	15
time to debur part between steps	15	10
time to clean machine when finished	10	8

ESTIMATED MANUFACTURING TIME:	[min]	196	127
	[hr]	3.3	2.1

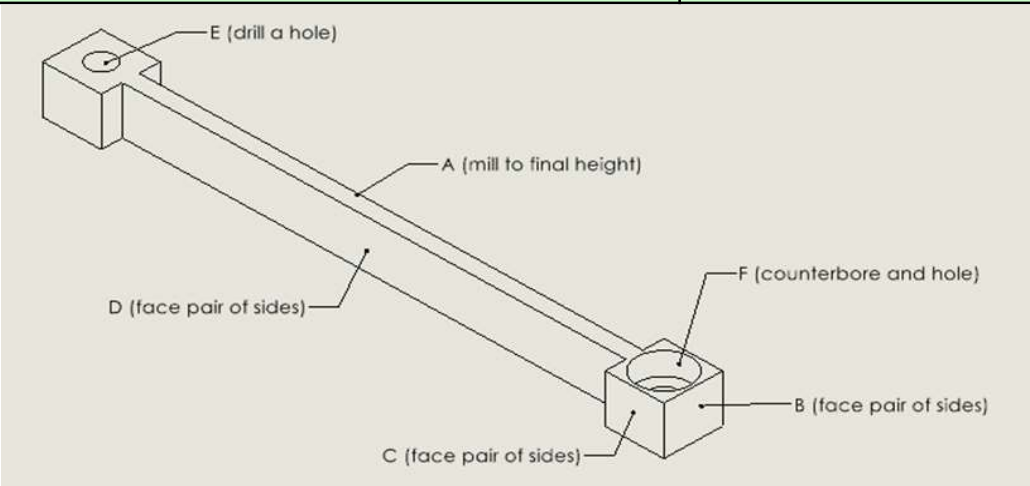

Part Name / Number: Blade Lock

MANUFACTURING PROCESS	Student Experience Level	
	BEGINNER [min]	INTERMEDIATE [min]
mark & cut bar stock on bandsaw	10	8
load part(s) into milling machine vise	5	3
mill part to final length (0.1") [A]	15	10
face first pair of sides to (0.5") [B]	15	10
face second pair of side s to (2.1)" [C]	15	10
find X, Y zeros using edgefinder	10	8
drill (3) clearance 1/4" holes, thru [D]	20	15
time to debur part between steps	5	3
time to clean machine when finished	7	5
ESTIMATED MANUFACTURING TIME: [min]	**102**	**72**
[hr]	**1.7**	**1.2**

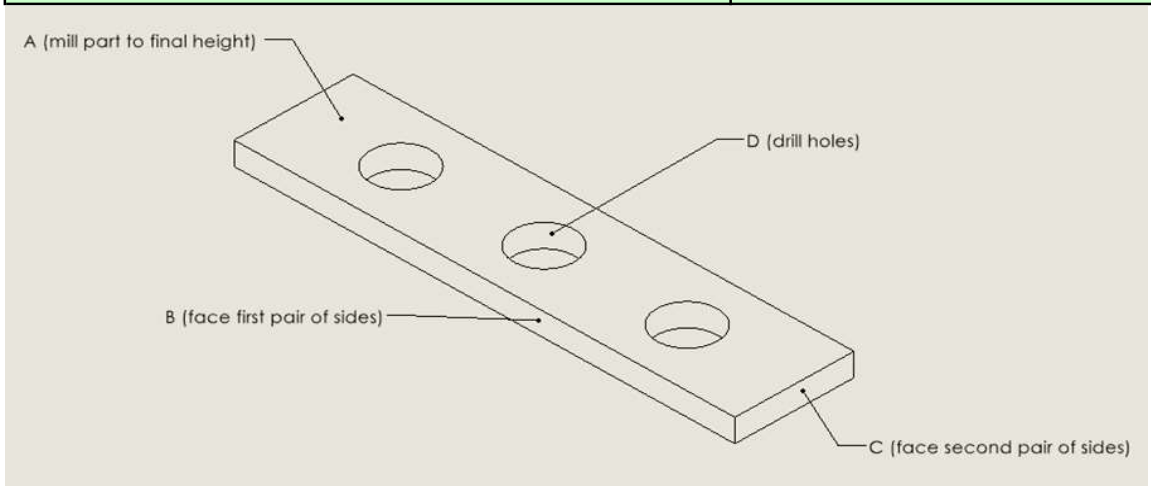

Part Name / Number: Blade

MANUFACTURING PROCESS	Student Experience Level BEGINNER [min]	INTERMEDIATE [min]
select to material blank from which to make part	10	5
layout cut and fold lines using full scale paper template	20	10
cut part to overall size using foot shear or bandsaw **[A]**	12	7
center punch hole (3) using a hammer and punch	5	3
punch 3 holes using sheetmetal punch press **[B]**	12	7
sharpen and grind the edge with belt sand **[C]**	10	5
Sharpen the edge with sharpening stone **[C]**	10	5
time to debur part between steps	5	7
time to dispose of material scraps when finished	3	4
ESTIMATED MANUFACTURING TIME: [min]	**87**	**53**
[hr]	**1.5**	**0.9**

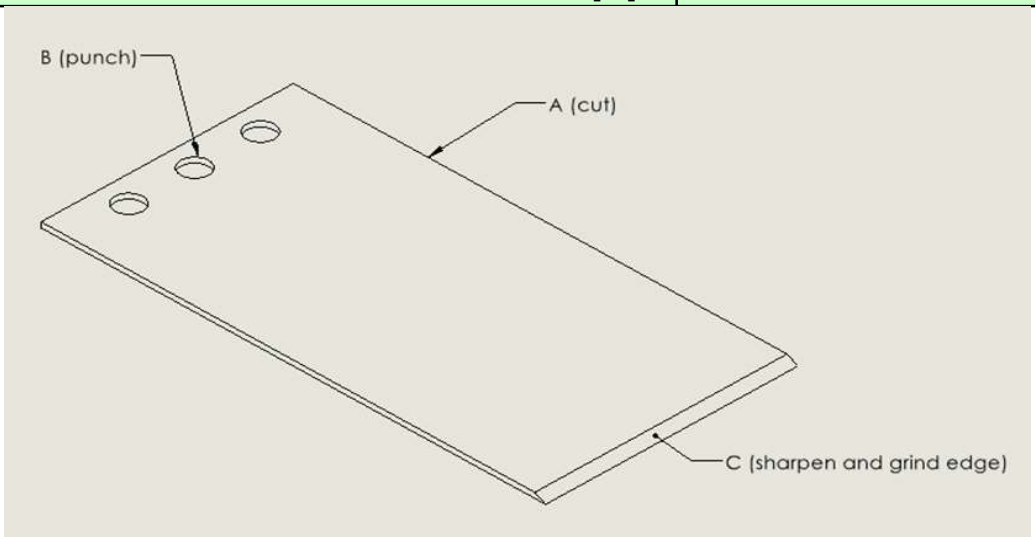

Part Name / Number: Vegetable Base

MANUFACTURING PROCESS	Student Experience Level BEGINNER [min]	INTERMEDIATE [min]
mark & cut aluminum bar stock on bandsaw	15	10
load part into milling machine	8	5
load tool (endmill, drill chuck, etc.) into milling machine	3	1
mill part to final length (0.05") [A]	15	10
face first pair of sides (4.2") [B]	10	7
face second pair of sides (2.3") [C]	10	7
find X, Y zeros using edgefinder	10	8
profile a (0.12" x 0.5") hole, 0.03" deep [D}	25	15
time to debur part between steps	15	10
time to clean machine when finished	10	8
ESTIMATED MANUFACTURING TIME: [min]	**121**	**81**
[hr]	**2.0**	**1.4**

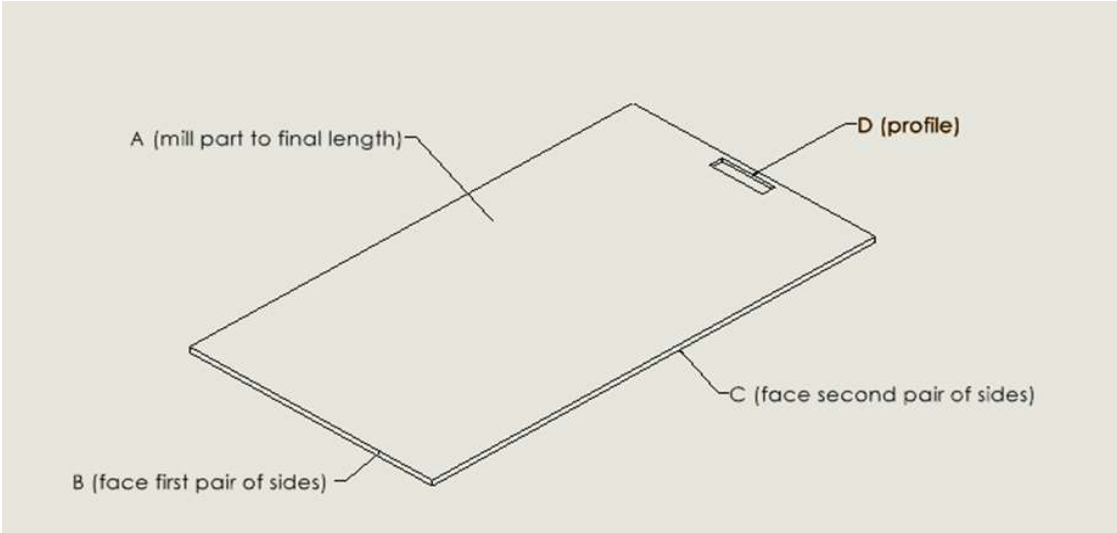

MANUFACTURING PROCESS		Student Experience Level BEGINNER [min]	INTERMEDIATE [min]
Slice CAD model		30	20
Load G-code onto printer		7	5
Set up filament and build plate		25	15
Print part		55	55
ESTIMATED MANUFACTURING TIME:	**[min]**	**117**	**95**
	[hr]	**2.0**	**1.6**

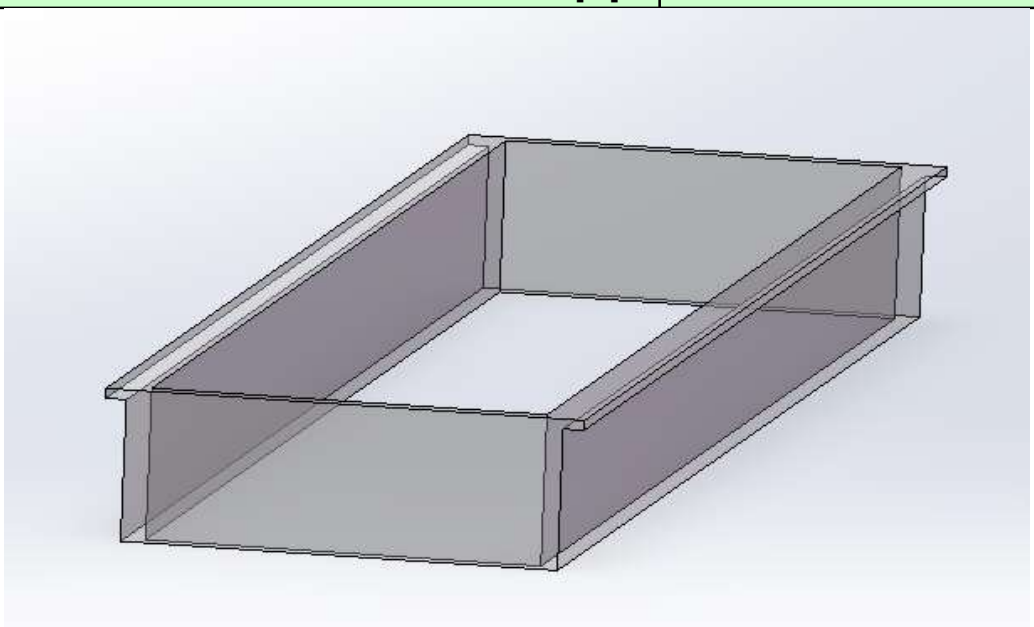

Manufacturing Time Estimations for Design 3

Part Name / Number: Lever

MANUFACTURING PROCESS	Student Experience Level BEGINNER [min]	INTERMEDIATE [min]
Mark and Cut 4.00" x 4.00" x 0.125" Steel stock in Bandsaw	10	8
load part into milling vise	5	3
find X, Y zeros using edgefinder	10	8
mill the cut stock to size	20	12
drill 3 clearance holes for assembly, thru **[A]**	15	11
time to debur part between steps	5	3
time to clean machine when finished	7	5

ESTIMATED MANUFACTURING TIME:	**[min]**	**72**	**50**
	[hr]	**1.2**	**0.8**

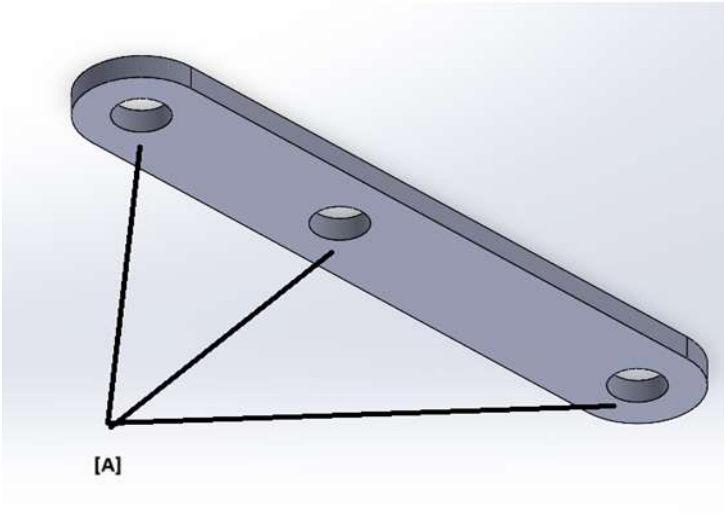

Part Name / Number: Scotch Yoke

MANUFACTURING PROCESS	Student Experience Level BEGINNER [min]	INTERMEDIATE [min]
Mark & Cut 4" x 4" x 0.5" Steel stock on Bandsaw	10	8
Load part into milling vise	5	3
find X, Y zeros using edgefinder	10	8
drill 1 clearance holes for lever mounting, thru **[A]**	10	8
Load into CNC Machine	5	3
Allow CNC Machine to finish part	10	10
time to clean machines when finished	10	8
time to program CNC machine	60	45

	[min]	120	93
ESTIMATED MANUFACTURING TIME:	[hr]	2	1.6

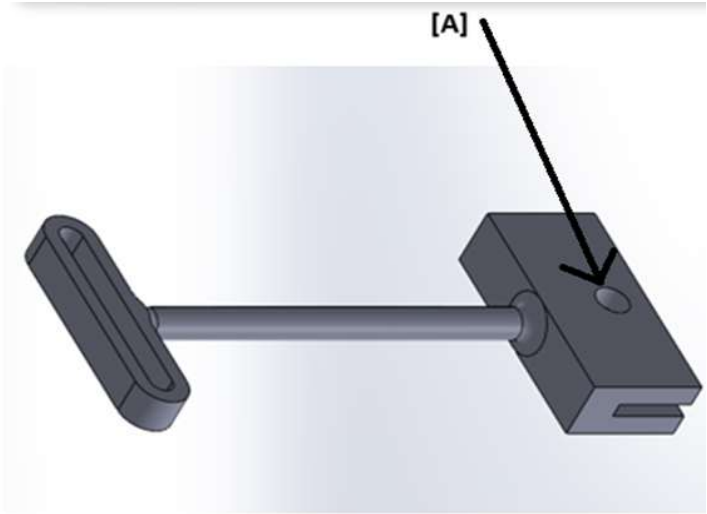

Part Name / Number: Base

MANUFACTURING PROCESS	Student Experience Level	
	BEGINNER [min]	INTERMEDIATE [min]
Mark and Cut 8.00" x 8.00" x 0.25" Al stock in Bandsaw	10	8
Load part into milling vise	5	3
find X, Y zeros using edgefinder	10	8
drill 3 clearance holes for assembly, thru **[A]**	10	8
time to debur part between steps	5	3
time to clean machine when finished	7	5

	[min]	47	35
ESTIMATED MANUFACTURING TIME:	[hr]	0.8	0.6

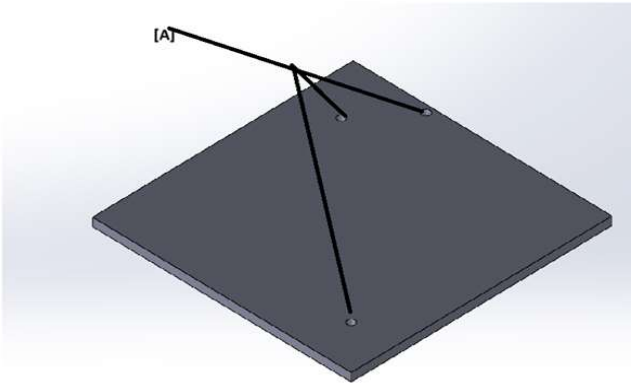

Part Name / Number: SY Guidepath

MANUFACTURING PROCESS	Student Experience Level BEGINNER [min]	INTERMEDIATE [min]
Mark and Cut 2.00" x 48.00" x 0.375" Al stock in Bandsa	10	8
Load part into milling vise	5	3
find X, Y zeros using edgefinder	10	8
drill 1 clearance holes for SY guidepath, thru **[A]**	10	8
time to debur part between steps	5	3
time to clean machine when finished	7	5
[min]	**47**	**35**
ESTIMATED MANUFACTURING TIME: [hr]	**0.8**	**0.6**

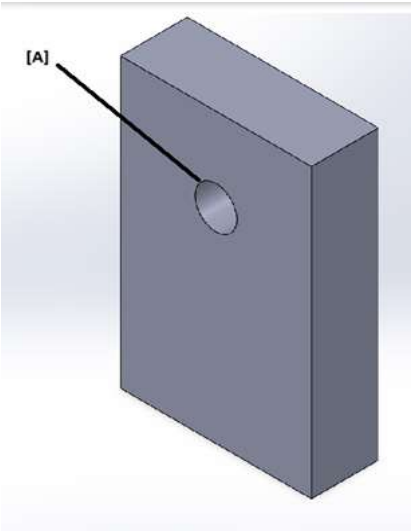

Part Name / Number: Fruit Holder

MANUFACTURING PROCESS	Student Experience Level BEGINNER [min]	INTERMEDIATE [min]
Mark and Cut 2.00" x 48.00" x 0.375" Al stock in Bandsa	10	8
Load part into milling vise	5	3
find X, Y zeros using edgefinder	10	8
Mill the cutout space on part	30	20
drill 2 #10 holes for assembly, thru **[A]**	15	11
drill 4 #10 holes for assembly, blind **[B]**	25	18
drill notch for SY guidepath, thru **[C]**	10	8
time to debur part between steps	5	3
time to clean machine when finished	7	5

	[min]	117	84
ESTIMATED MANUFACTURING TIME:	[hr]	2	1.4

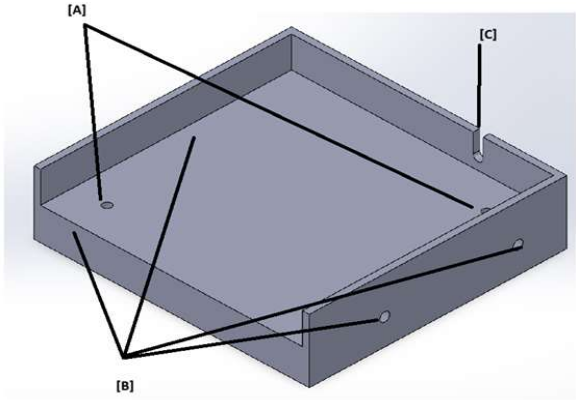

Part Name / Number: Cover

MANUFACTURING PROCESS	Student Experience Level	
	BEGINNER [min]	INTERMEDIATE [min]
Part created using 3D printing (No manual time)	120	120
time to sand at end	5	3
time to clean machine when finished	5	3

	[min]	130	126
ESTIMATED MANUFACTURING TIME:	[hr]	2.2	2.1

EML2322L Time Estimation for Design 4

Part Name / Number: Modified Base

MANUFACTURING PROCESS	Student Experience Level BEGINNER [min]	INTERMEDIATE [min]
mark & cut aluminum bar stock on bandsaw	10	5
load part into milling machine	3	1
load tool into milling machine	3	1
face sides (2.5" x 11")	15	12
mill part to final length	20	15
find X, Y zeros using edgefinder	10	8
drill (1) 0.75" clearance hole, thru [A]	20	12
drill (1) 0.375" clearance hole, thru [B]	20	12
counterbore (1) hole, 0.30" deep [B]	10	7
ream precision 0.377" hole, thru [B]	10	7
drill and tap (1) 10-24 threaded hole, 0.1" deep [C]	15	10
load part into milling machine with the side facing up	3	1
find X, Y zeros using edgefinder	10	8
drill and tap (2) 10-24 threaded hole, thru [D]	25	20
time to debur part between steps	5	3
time to clean machine when finished	7	5
ESTIMATED MANUFACTURING TIME: [min]	**186**	**127**
[hr]	**3.1**	**2.1**

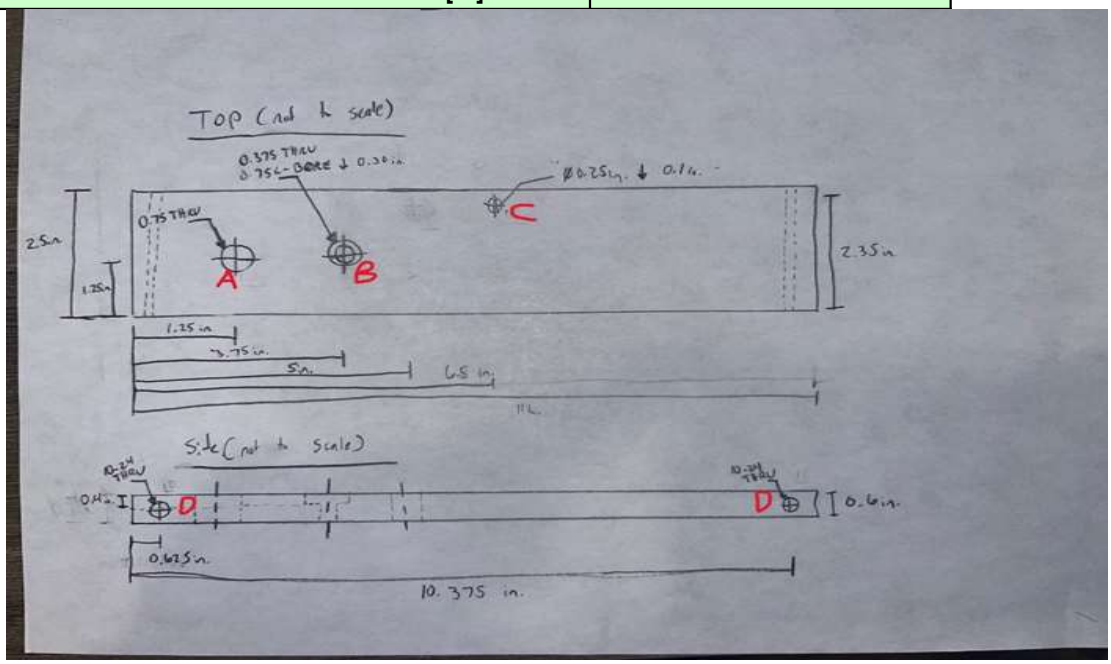

Part Name / Number: Side Panel

MANUFACTURING PROCESS	Student Experience Level BEGINNER [min]	INTERMEDIATE [min]
mark & cut aluminum bar stock on bandsaw	20	10

load part into milling machine	3	1
load tool into milling machine	3	1
face sides (2.385" x 11")	15	12
mill part to final length	20	15
find X, Y zeros using edgefinder	10	8
drill and tap (2) 10-24 threaded hole, thru [A]	25	20
face slot 0.5" wide and 10.375" long [B]	45	30
load part into milling machine with the side facing up	3	1
drill and tap (3) 10-24 threaded hole, 0.1" deep [C]	45	30
time to debur part between steps	5	3
time to clean machine when finished	7	5
TIMATED MANUFACTURING TIME FOR O [min]	**201**	**136**
[hr]	**3.4**	**2.3**
TIMATED MANUFACTURING TIME FOR TV [min]	**402**	**272**
[hr]	**6.7**	**4.5**

NOTE 1: two side panels are needed, so the time for one is shown on top and the time for both is shown below it

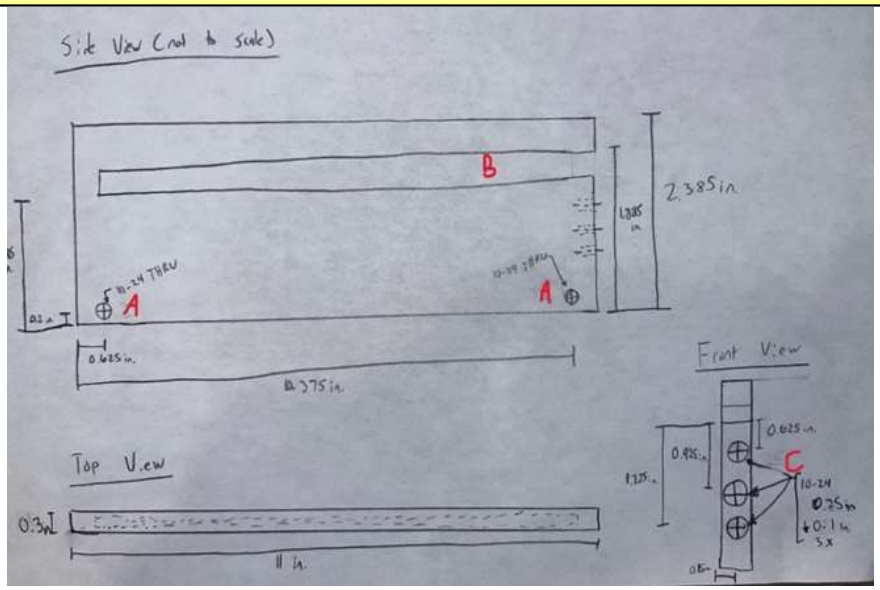

Part Name / Number: Yoke

MANUFACTURING PROCESS	Student Experience Level BEGINNER [min]	INTERMEDIATE [min]
mark & cut aluminum bar stock on bandsaw into L shape	15	10
load part into milling machine	3	1
load tool (endmill, drill chuck, etc.) into milling machine	3	1
face sides (2.5" x 1.5")	15	12
mill part to final length	20	15

find X, Y zeros using edgefinder	10	8
drill (1) 0.25" clearance hole, thru [A]	20	12
face slot about 0.16" wide and 2" long [B]	35	25
time to debur part between steps	5	3
time to clean machine when finished	7	5
ESTIMATED MANUFACTURING TIME: [min]	**133**	**92**
[hr]	**2.2**	**1.5**

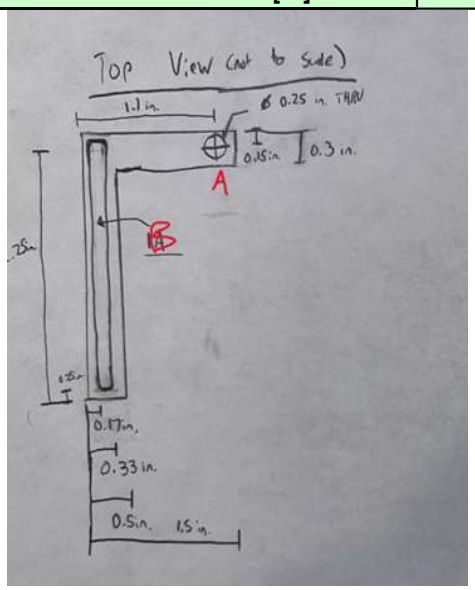

Part Name / Number: Blade

MANUFACTURING PROCESS	Student Experience Level BEGINNER [min]	INTERMEDIATE [min]
mark & cut steel sheet stock on bandsaw	10	5
mark & cut diagonal part of blade on bandsaw [A]	10	5
load part into milling machine	3	1
load tool (endmill, drill chuck, etc.) into milling machine	3	1
face sides (2.5" x 2.5")	15	12
mill part to final length	20	15
find X, Y zeros using edgefinder	10	8

drill and tap (1) 10-24 threaded hole, thru [B]	15	10
time to debur part between steps	5	3
time to clean machine when finished	7	5
sharpen blade	10	5
ESTIMATED MANUFACTURING TIME: [min]	**108**	**70**
[hr]	**1.8**	**1.2**

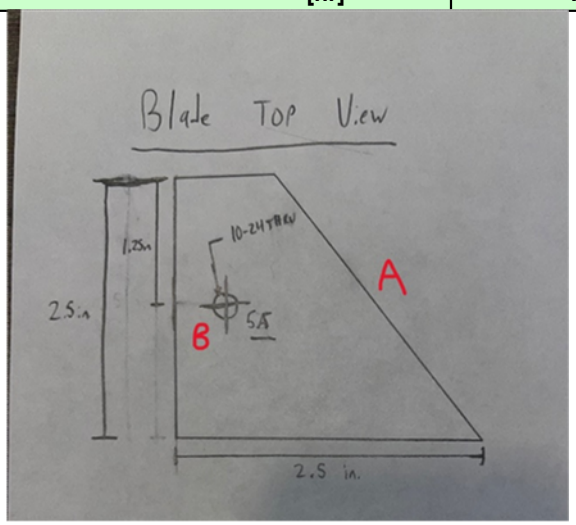

Part Name / Number: Housing

MANUFACTURING PROCESS	Student Experience Level BEGINNER [min]	INTERMEDIATE [min]
mark & cut aluminum bar stock on bandsaw	10	5
load part into milling machine	3	1
load tool (endmill, drill chuck, etc.) into milling machine	3	1
face sides (1.5" x 3")	15	12
mill part to final length	20	15
find X, Y zeros using edgefinder	10	8
drill and tap (1) 10-24 threaded hole, thru [A]	25	20
face slot 0.3" wide and 2.5" long [B]	45	30
load part into milling machine with the side facing up	3	1
face slot 0.15" wide, 2.5" long, and 1" deep [C]	60	45
time to debur part between steps	5	3
time to clean machine when finished	7	5
ESTIMATED MANUFACTURING TIME: [min]	**206**	**146**
[hr]	**3.4**	**2.4**

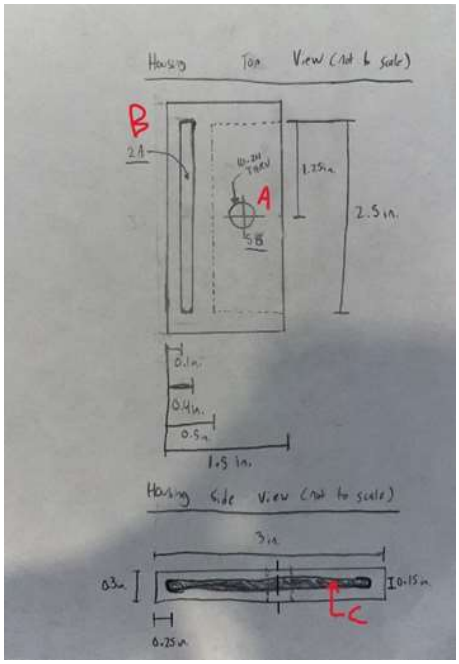

Part Name / Number: Lever Arm

MANUFACTURING PROCESS	Student Experience Level BEGINNER [min]	INTERMEDIATE [min]
mark & cut aluminum bar stock on bandsaw	10	5
load part into milling machine	3	1
load tool (endmill, drill chuck, etc.) into milling machine	3	1
face sides (0.5" x 6")	15	12
mill part to final length	20	15
find X, Y zeros using edgefinder	10	8
drill (2) 0.25" clearance hole, thru [A]	40	25
face slot 0.25" wide and about 1.3" long [B]	45	30
time to debur part between steps	5	3
time to clean machine when finished	7	5
ESTIMATED MANUFACTURING TIME: [min]	**158**	**105**
[hr]	**2.6**	**1.8**

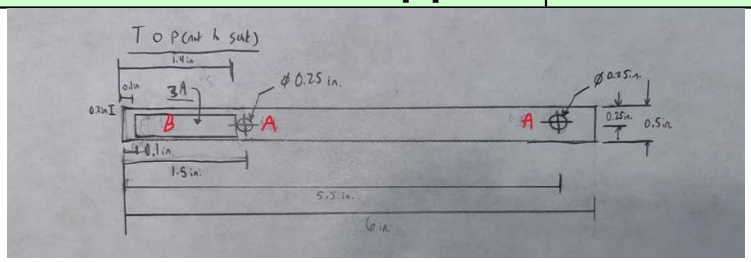

Part Name / Number: Food Table

MANUFACTURING PROCESS	Student Experience Level BEGINNER [min]	INTERMEDIATE [min]

Slice CAD model	30	20
Load G-code onto printer	7	5
Set up filament and build plate	25	15
Print part	60	60
ESTIMATED MANUFACTURING TIME: [min]	**122**	**100**
[hr]	**2.0**	**1.7**

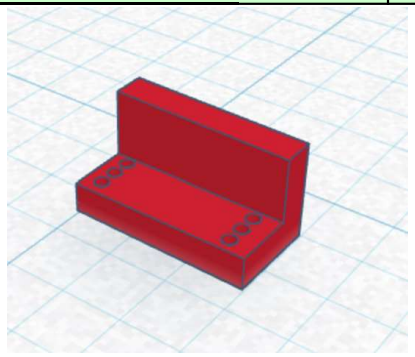

Part Name / Number: Short Pin

MANUFACTURING PROCESS	**Student Experience Level**	
	BEGINNER	**INTERMEDIATE**
	[min]	**[min]**
load part and cutting tool into lathe	8	5
find X, Y zeros using destructive zero	10	8
turn part so that there is a head and shaft at correct diameter [	45	30
ESTIMATED MANUFACTURING TIME: [min]	**63**	**43**
[hr]	**1.1**	**0.7**

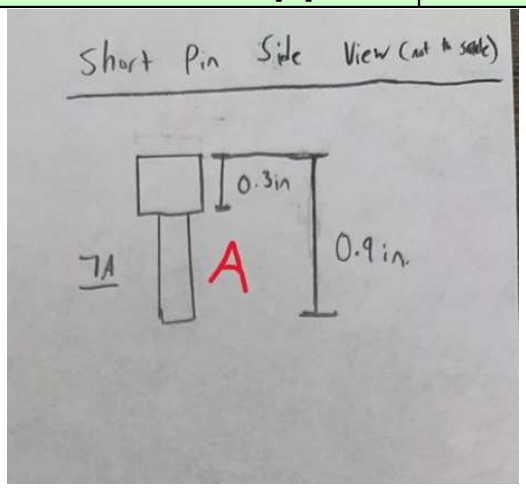

Safety Calculations

Design 1	
Top Area of Blade	3.6 in^2
Top Area of Blade Exposed	0.504 in^2
Percentage Blade Exposure	14 %

Design 2	
Top Area of Blade	10.58 in^2
Top Area of Blade Exposed	9.660 in^2
Percentage Blade Exposure	91.30 %

Design 3	
Top Area of Blade	0.375 in^2
Top Area of Blade Exposed	0 in^2
Percentage Blade Exposure	0 %

Design 4	
Top Area of Blade	2.5 in^2
Top Area of Blade Exposed	2.5 in^2
Percentage Blade Exposure	100 %

Range of Motion Calculations

Design 1		
Flywheel Diameter	1.5	in
Slider One Additional RoM	0.5	in
slider Two Additional RoM	0.5	in
Total RoM	2.5	in

Design 2	Hole 1	Hole 2	Hole 3	Units
Connect Hole Distance From Center	1	1.5	2	in
Angle of Holes to the Horizontal Line	15	15	15	deg
Total RoM	1.997	2.995	3.993	in

Design 3		
Distance between two holes of lever	2.5	in
Angle swept	1.92	rad
Total RoM	4.10	in

Design 4		
Yoke Movement	2.5	in
Smaller Lever Arm Length	2.5	in
Longer Lever Arm Length	4.5	in
Total RoM	4.50	in

Sub-Appendix A-1: Concept Modifications

Design 1

1. Changed slider one from a cylindrical rounded shape to a rectangular shape with nominal stock size 1/8” height and 1/2” width.

2. Changed slider two from a cylindrical rounded shape to a rectangular shape with nominal stock size 1/8” height and 1/2” width.

3. Removed the cylindrical notch from the top of the blade attachment and added a 0.1” inch deep hole with diameter 0.1”.

4. Added a cylindrical pin with height of 0.363” and diameter 0.1” to press fit into the blade attachment.

Design 2

1. Changed connecting rod 1 and 2 head shape and size from circular (0.5” diameter) to square (0.35” length and 0.35” width) to reduce manufacturing time

2. Removed counterbores from 4 holes on the flywheel.

3. Changed from rounded rectangles pocket on vegetable base to a rectangular (0.12’” width and 0.5” length) pocket to reduce manufacturing time.

Design 3

-No modifications were made to this design.

Design 4

-No modifications were made to this design.

Modified Drawings for Design 1

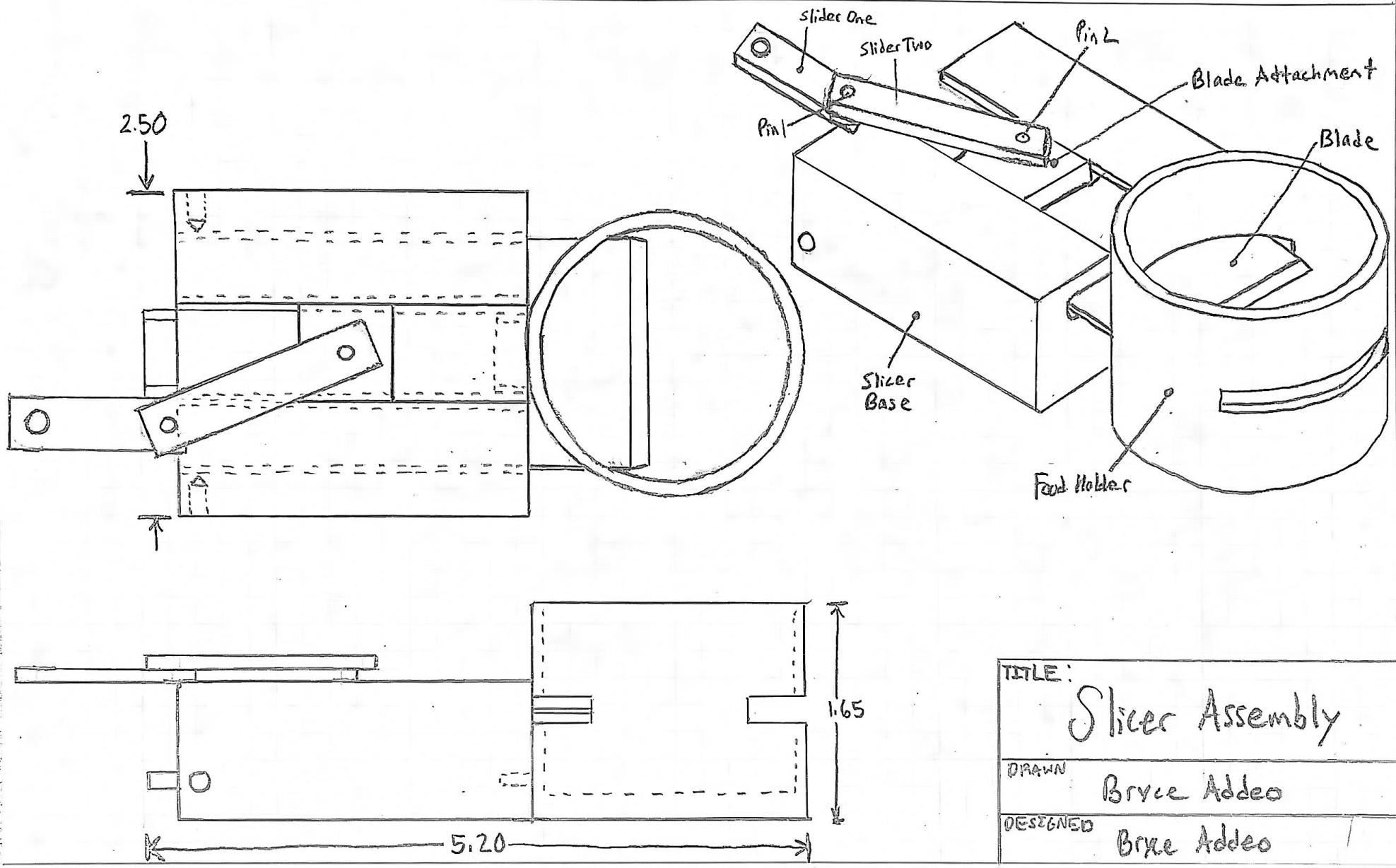

TITLE: Slicer Assembly

DRAWN Bryce Addeo

DESIGNED Bryce Addeo

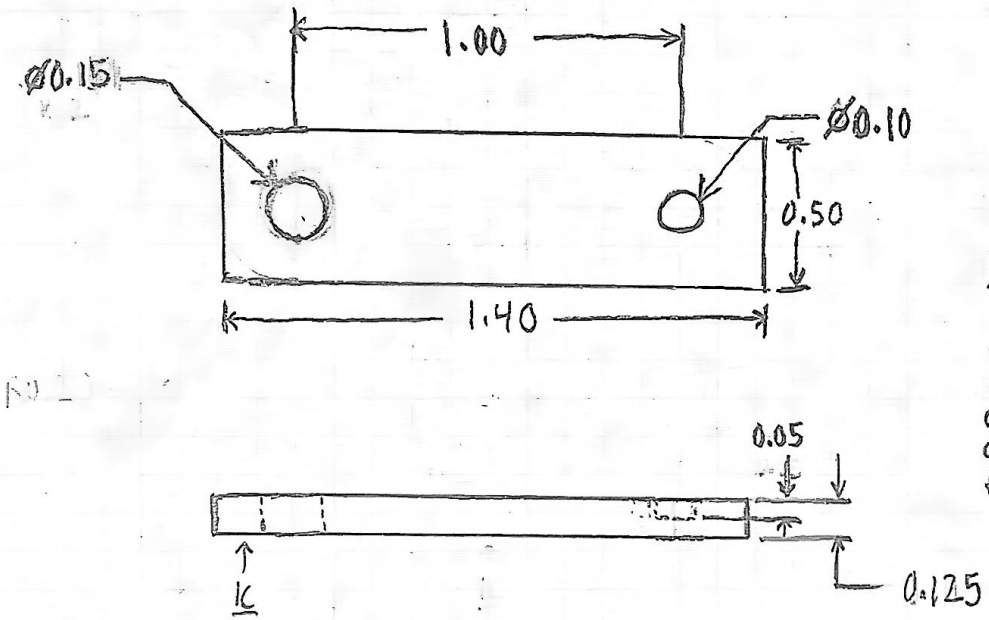

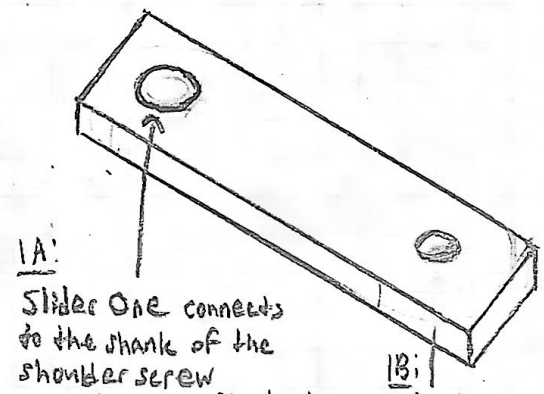

TITLE:	Slider One
DRAWN	Bryce Addeo
DESIGNED	Bryce Addeo

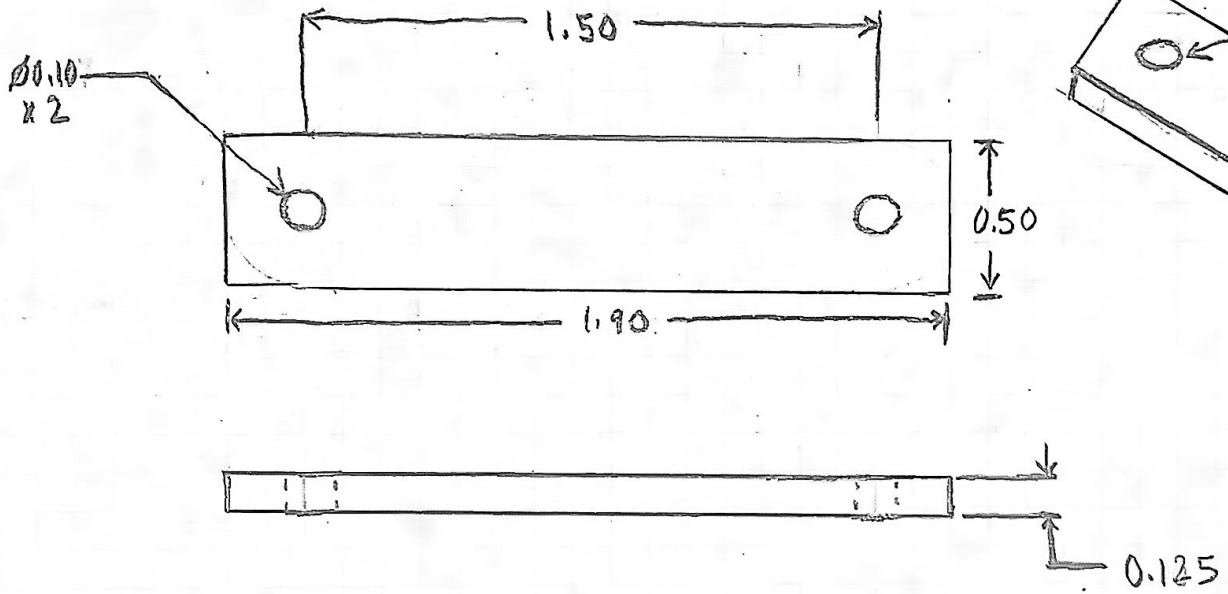

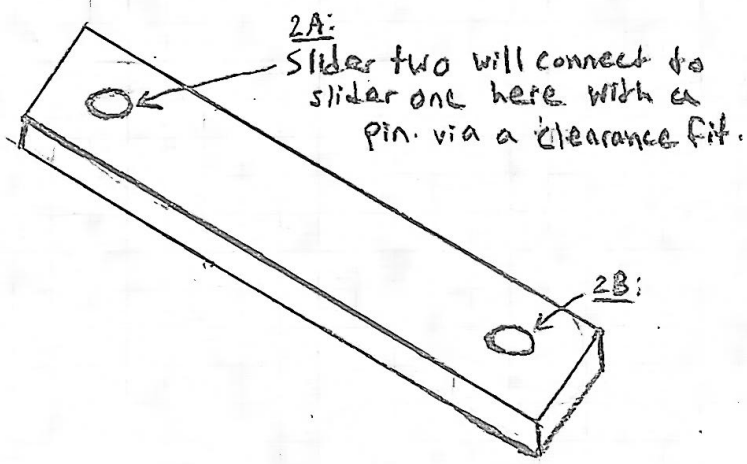

TITLE:	Slider Two
DRAWN	Bryce Addea
DESIGNED	Bryce Addea

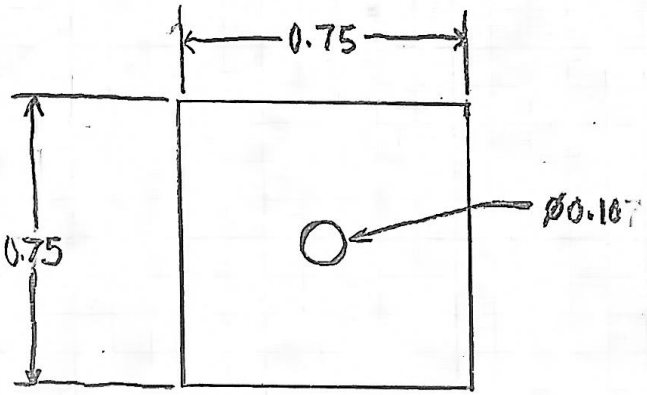

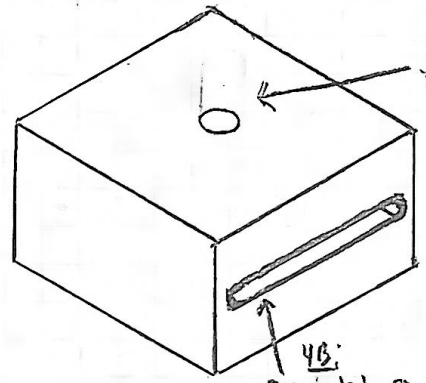

4A:
Pin press fits into this hole to connect slider 2 to

4B:
Rounded rectangle cut for blade to fit into.

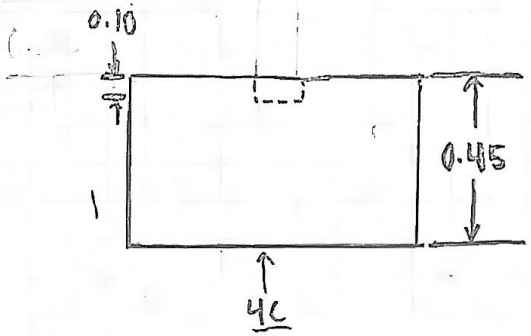

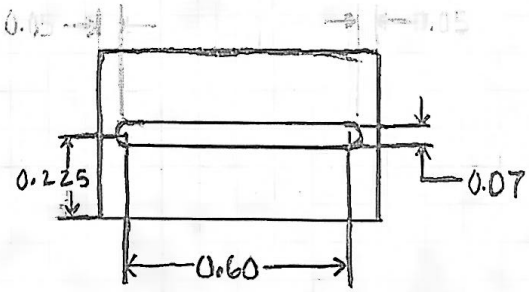

TITLE:	Blade Attachment
DRAWN	Bryce Addeo
DESIGNED	Bryce Addeo

Modified Drawings for Design 2

Changes Made to Design 2 ***

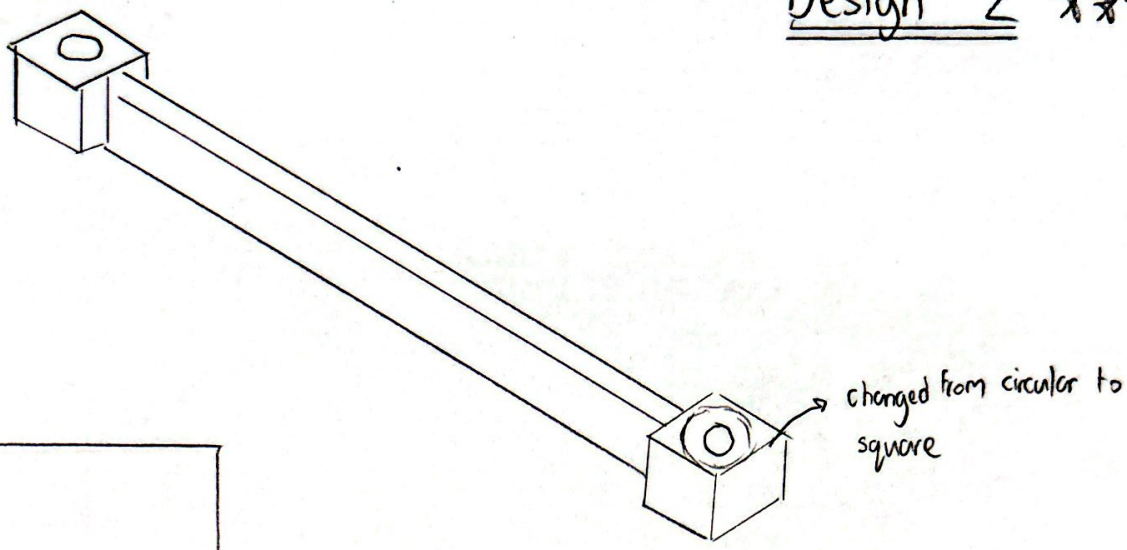

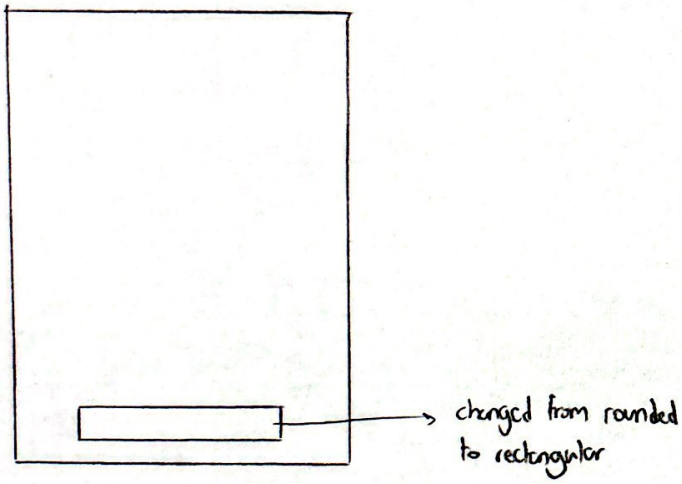

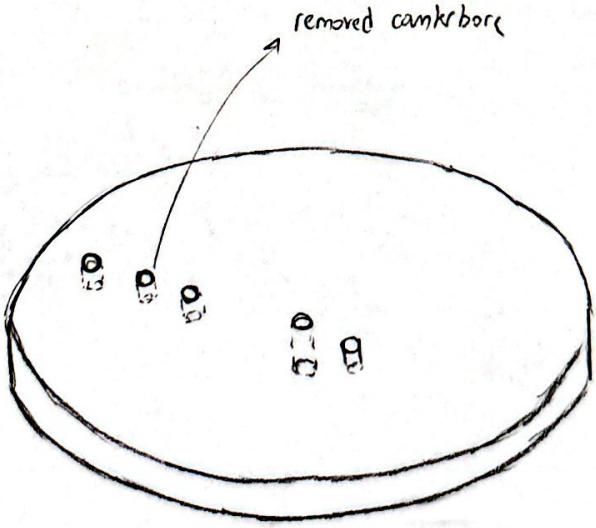

Scanned with CamScanner