Design Report 3

Bryce Addeo, Anthony Weaver, Holden Kapsos, Krittin Jindamai

24 November 2024

EML2322L – Fall 2024

Design Description

The following design is for a food slicer with variable thicknesses. The food slicer is powered via a two-stroke double-acting compressed air powered reciprocating engine (Air Engine). The slicer moves via a scotch yoke that is connected to a lever with at least one razor blade attached to it. The food slicer is operated by the user placing the food into the cover's 3-inch diameter cutout. The slicer, which has razor blades attached, rotates back and forth, over 4.10 inches, radially making cuts into the food and pushes out the cut food out the opening in the back of the food slicer. Variable slice thicknesses are achieved by adding to or reducing the number of razor blades attached to the lever. The food slicer has one point of connection to the Air Engine. The scotch yoke of the food slicer is connected to the shoulder screw that is connected to the flywheel of the engine. In total, there are 6 components that need to be manufactured as well as several screws that must be purchased to produce this design.

The base of the food slicer is made of a low cost, food safe, aluminum (6061-T6) material. The base has 3 threaded screw holes drilled into it that allow for the food holder and scotch yoke guide path to be attached. These holes are all threaded for #10-24 screws.

The food holder for the food slicer is also made of a low cost, food safe, aluminum (6061-T6) material. The holder has two holes that are also drilled through for #10-24 screws and are concentric with the holes in the base. Additionally, there is a #10-24 threaded hole drilled 0.80 inches into the holder that a shoulder screw can be screwed into that a lever can be put on. Finally, there are four #10-24 threaded holes drilled 0.80 inches into the sides of the holder so that a cover can be attached to the holder.

The scotch yoke is connected to the flywheel of the air engine via the shank of the shoulder screw connecting the flywheel and piston. Because of the way that a scotch yoke works, the rotational motion of the flywheel is converted to linear motion. At the point where the scotch yoke is connected to the shoulder screw, linear sliding is occurring. To deal with the stresses associated with the motion of the flywheel, the scotch yoke shall be made of low carbon steel (A36). Additionally, low carbon steel (A36) is food safe making it a good fit for the food slicer.

The scotch yoke is connected to a lever via a shoulder screw that is screwed into the food holder. This lever performs rotational motion converted from the linear motion of the scotch yoke. This conversion of rotational to linear and back to rotational motion was done to ensure that the blade traveled more than the 1.5 inches required by the project requirements. The blade was calculated to have a range of motion of 4.10 inches. For similar reasons to the scotch yoke, the lever shall be made of low carbon steel (A36). The point where the lever is connected to the shoulder screw is experiencing rotational sliding. The lever is connected to the scotch yoke using a #10-24 shoulder screw.

The scotch yoke guidepath is in place to ensure that the scotch yoke does not move side to side. For similar reasons as the base and the food holder, the guidepath is made of an aluminum (6061-T6) material. An open slot with thickness equal to the diameter of the scotch yoke is drilled at the location where the scotch yoke moves. At this point of contact, linear sliding

occurs. There is also a #10-24 threaded hole on the bottom of the guidepath that is used to connect it to the base.

Finally, there is a cover that attaches to the food holder in order to make the design safer. As the design for this cover is more complicated to manufacture, it will be additively manufactured using a food safe 3D Printed PLA filament. The cover has 4 unthreaded holes that are concentric with the holes on the sides of the food holder that allow it to be attached with screws. Additionally, there is a 3-inch diameter cutout on top of the cover that the food can be placed into and cut.

Assembly Drawings and Bill of Materials

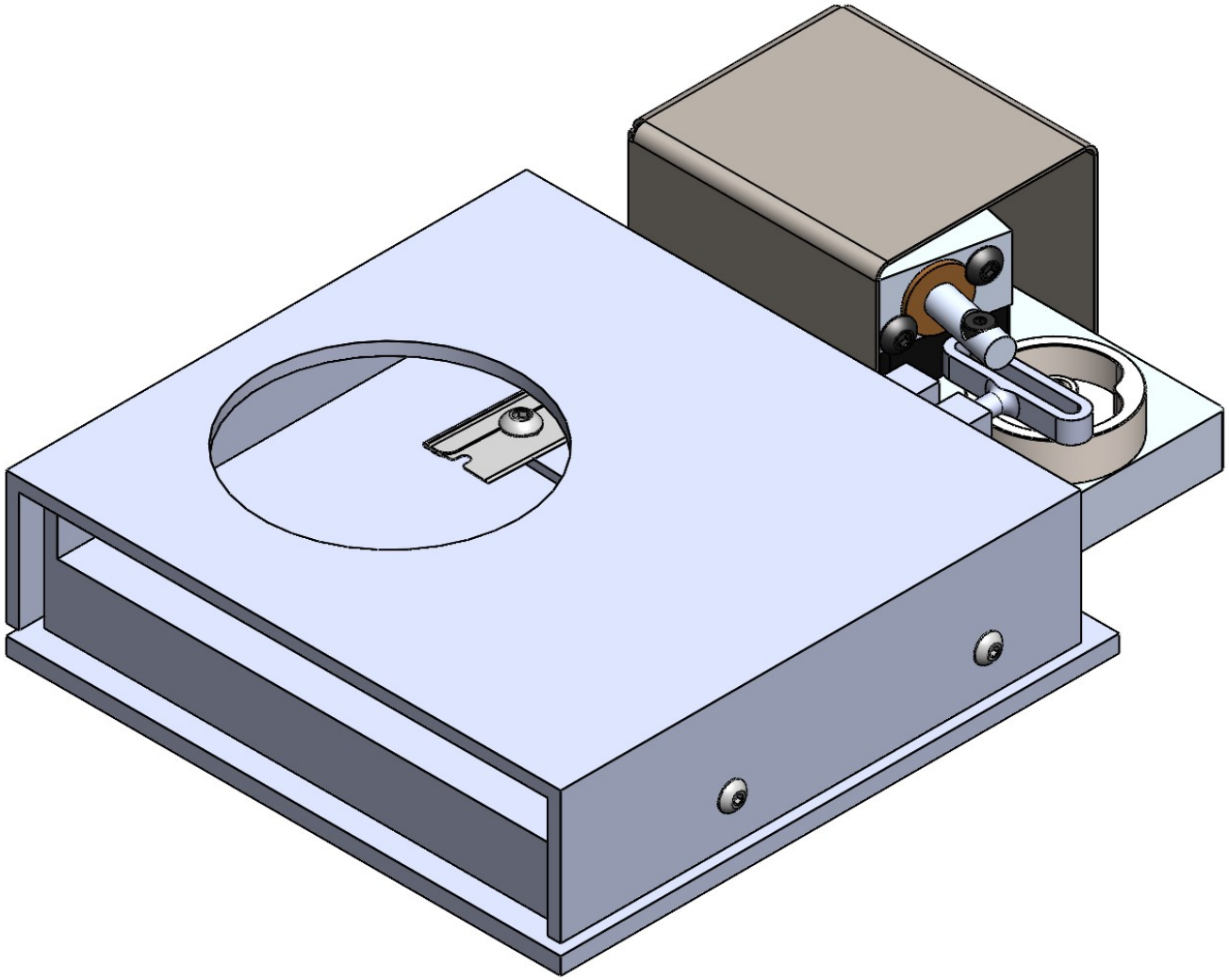

NOTES:
1. Cover can be removed and slicer maintains functionality

TOLERANCE UNLESS NOTED				TITLE: Full Assembly w/ Air Engine		
OPERATION	PLACES IN DIMENSION					
	0.0	0.00	0.000	DRAWN	Anthony Weaver	
MACHINING	±0.050	±0.020	±0.005	DESIGNED	Anthony Weaver	
CUT OFF (SAW, BURN, SHEAR)	±0.1	±0.060		SIZE	DWG. NO.	REV
WELDING	±0.1	±0.060		A	EML2322L-001	A
ANGULAR DIMS	±5	±2	±0.5	SCALE: 1:1.5		SHEET 1 OF 4

SOLIDWORKS Educational Product. For Instructional Use Only.

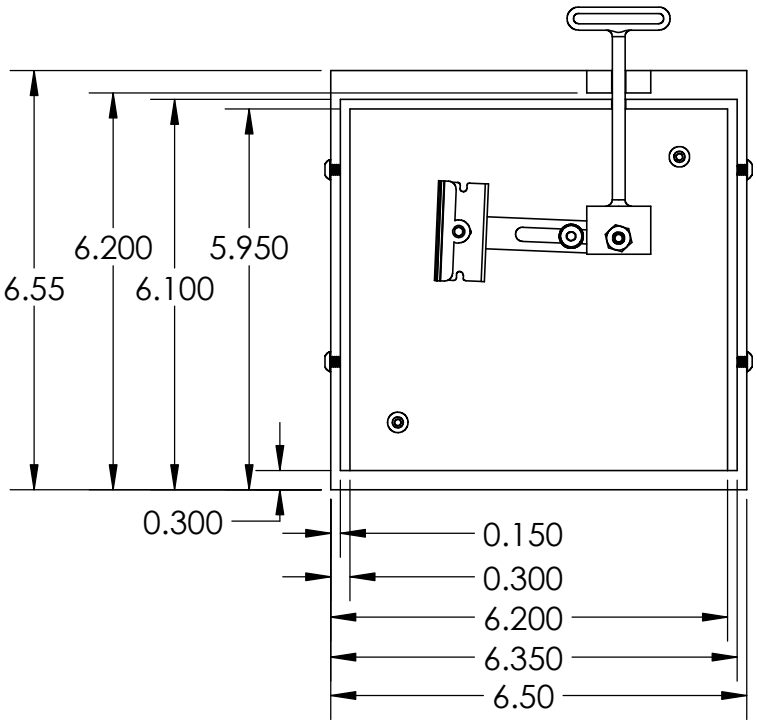

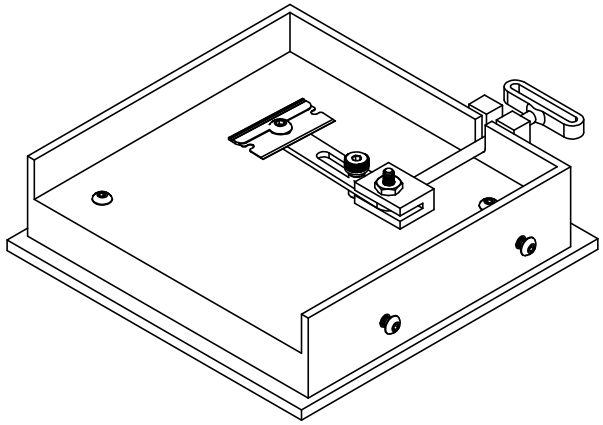

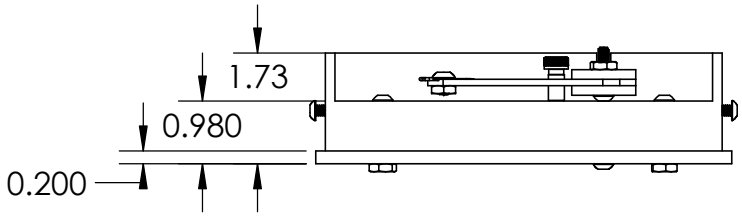

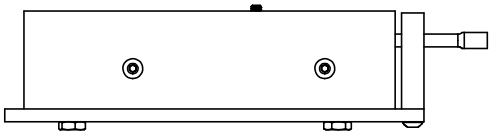

NOTES:
1. Cover has been removed for clarity
2. Six total manufactured components

TOLERANCE UNLESS NOTED				TITLE: Concept Assembly		
OPERATION	PLACES IN DIMENSION					
	0.0	0.00	0.000	DRAWN	Anthony Weaver	
MACHINING	±0.050	±0.020	±0.005	DESIGNED	Anthony Weaver	
CUT OFF (SAW, BURN, SHEAR)	±0.1	±0.060		SIZE	DWG. NO.	REV
WELDING	±0.1	±0.060		A	EML2322L-002	A
ANGULAR DIMS	±5	±2	±0.5	SCALE: 1:3		SHEET 2 OF 4

SOLIDWORKS Educational Product. For Instructional Use Only.

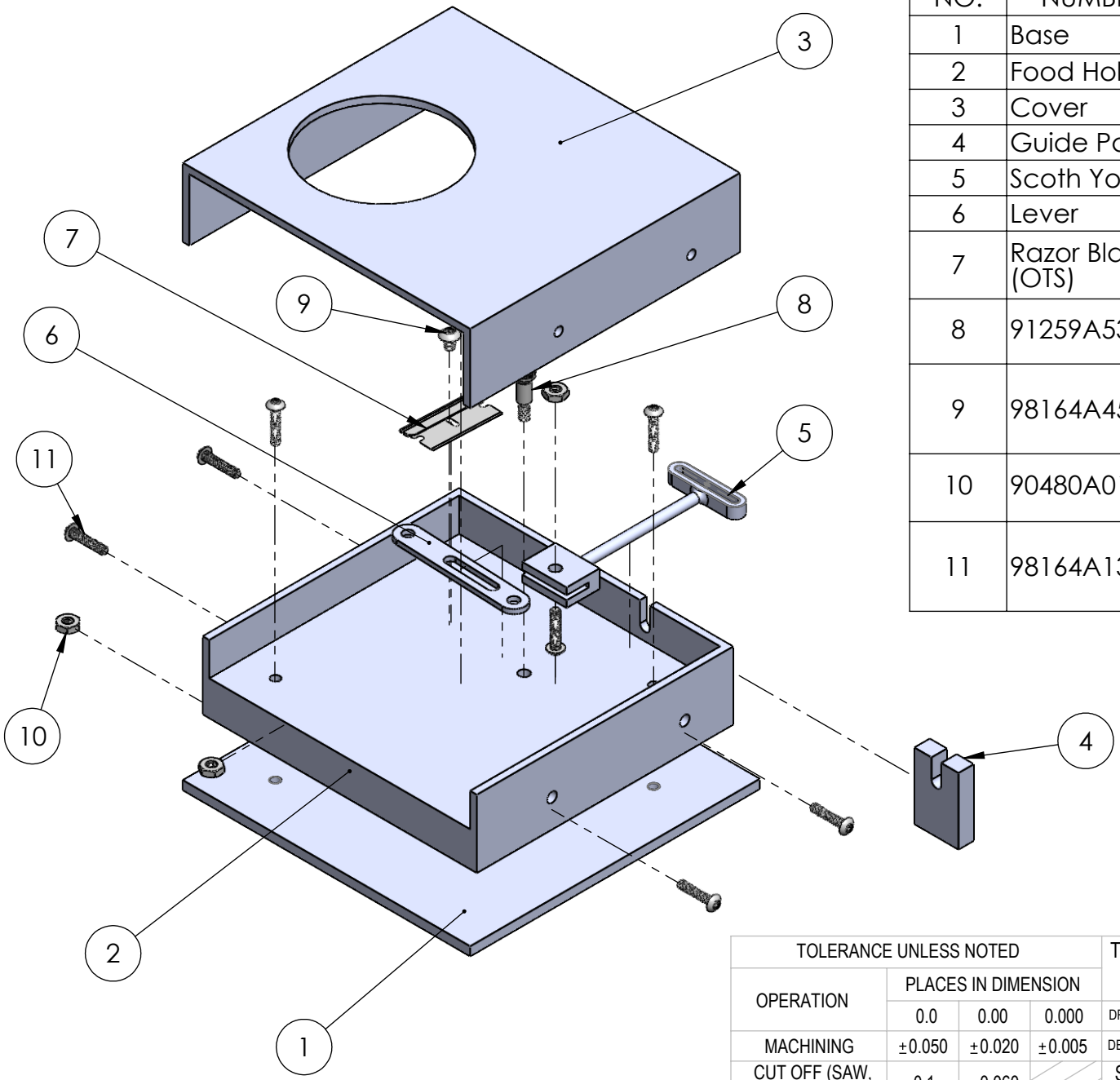

ITEM NO.	PART NUMBER	DESCRIPTION	QTY.
1	Base		1
2	Food Holder		1
3	Cover		1
4	Guide Path		1
5	Scoth Yoke		1
6	Lever		1
7	Razor Blade (OTS)	Steel (7071A15)	1
8	91259A537	Alloy Steel Shoulder Screw	1
9	98164A453	316 Stainless Steel Button Head Hex Drive Screw	1
10	90480A011	Low-Strength Steel Hex Nut	4
11	98164A139	316 Stainless Steel Button Head Hex Drive Screw	8

TOLERANCE UNLESS NOTED				TITLE: Assembly BOM		
OPERATION	PLACES IN DIMENSION					
	0.0	0.00	0.000	DRAWN	Anthony Weaver	
MACHINING	±0.050	±0.020	±0.005	DESIGNED	Anthony Weaver	
CUT OFF (SAW, BURN, SHEAR)	±0.1	±0.060		SIZE	DWG. NO.	REV
WELDING	±0.1	±0.060		A	EML2322L-003	A
ANGULAR DIMS	±5	±2	±0.5	SCALE: 1:2.5		SHEET 3 OF 3

5 4 3 2 1

SOLIDWORKS Educational Product. For Instructional Use Only.

Appendix A: Detailed Part Drawings

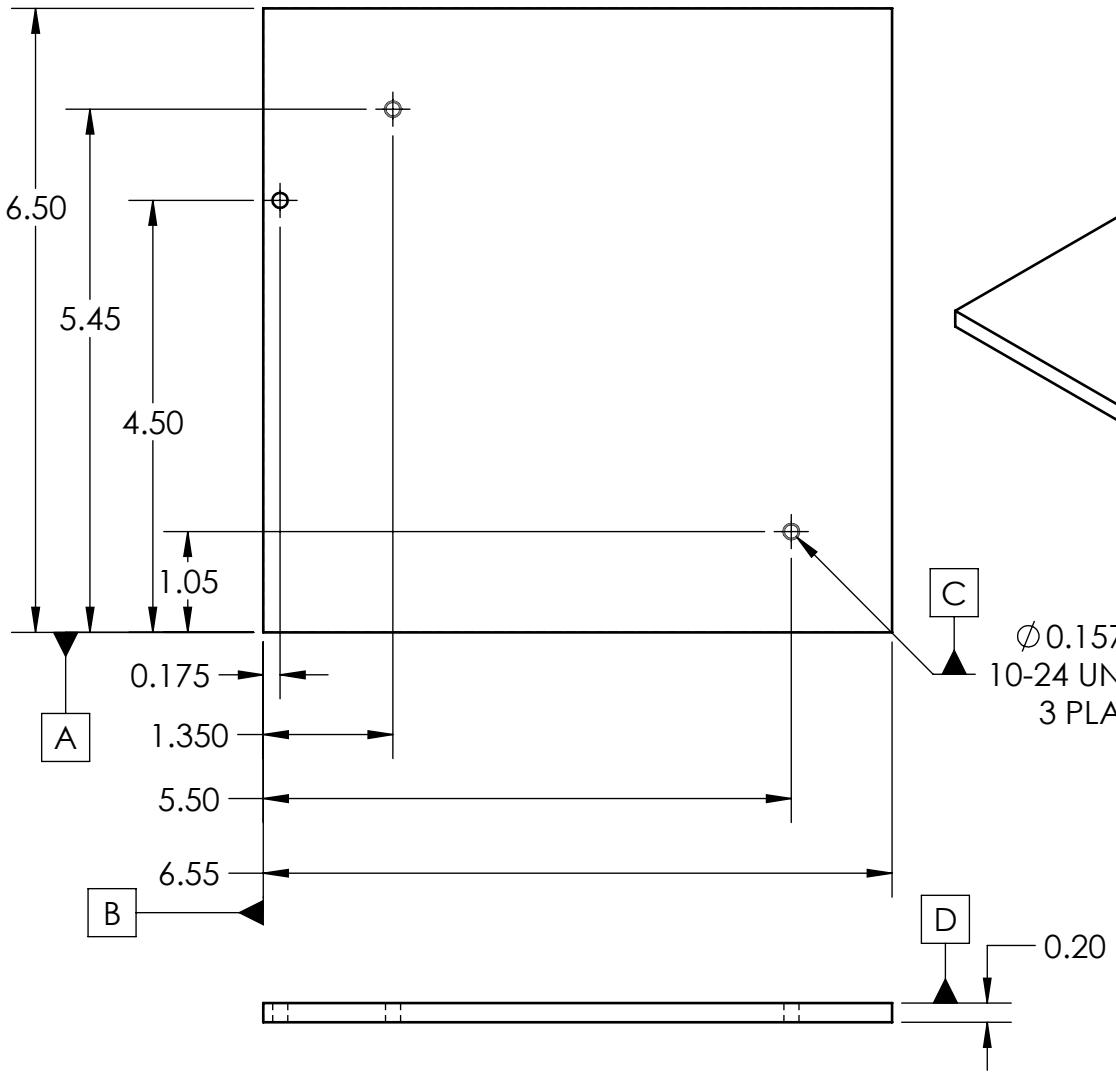

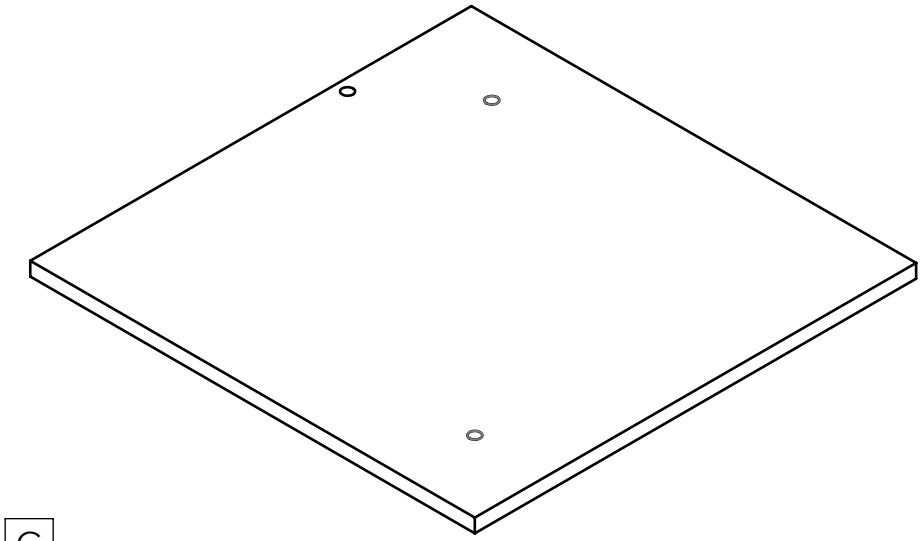

NOTES:
1. QTY: 1
2. MAT'L: ALUMINUM 6061-T6
3. FINISH ALL SURFACES
4. BREAK ALL EDGES
5. DIMS IN INCHES

TOLERANCE UNLESS NOTED				TITLE: Base Group 4A		
OPERATION	PLACES IN DIMENSION					
	0.0	0.00	0.000	DRAWN	BRYCE ADDEO	
MACHINING	±0.050	±0.020	±0.005	DESIGNED	ANTHONY WEAVER	
CUT OFF (SAW, BURN, SHEAR)	±0.1	±0.060		SIZE A	DWG. NO. EML2322L_G4A-1	REV A
WELDING	±0.1	±0.060				
ANGULAR DIMS	±5	±2	±0.5	SCALE: 1:2		SHEET 1 OF 5

5 4 3 2 1

SOLIDWORKS Educational Product. For Instructional Use Only.

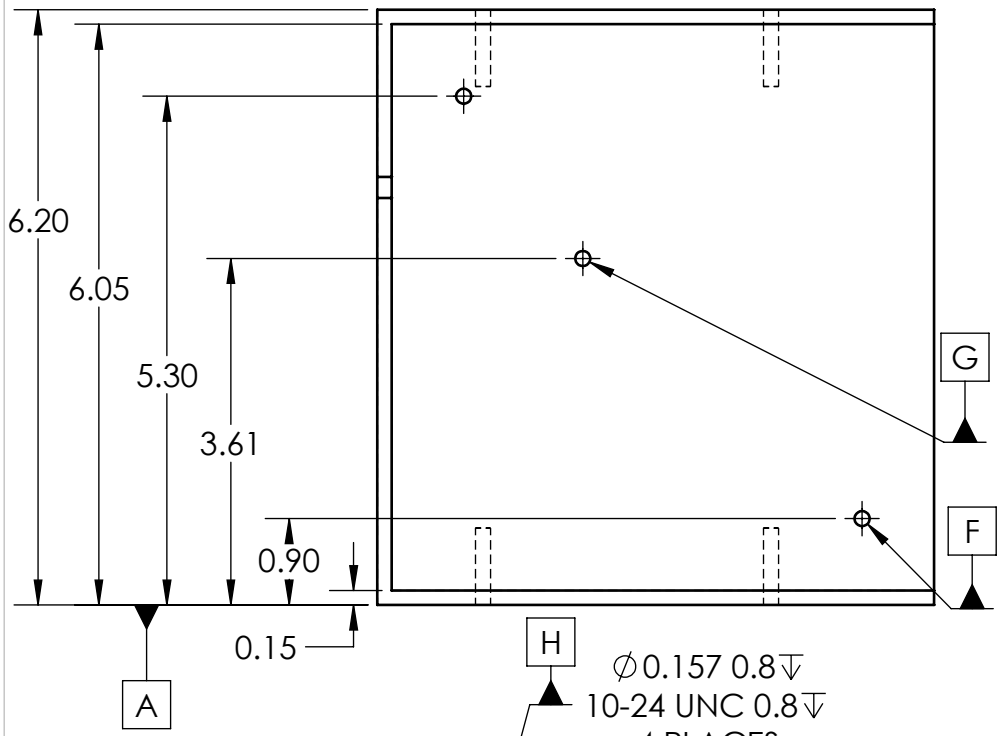

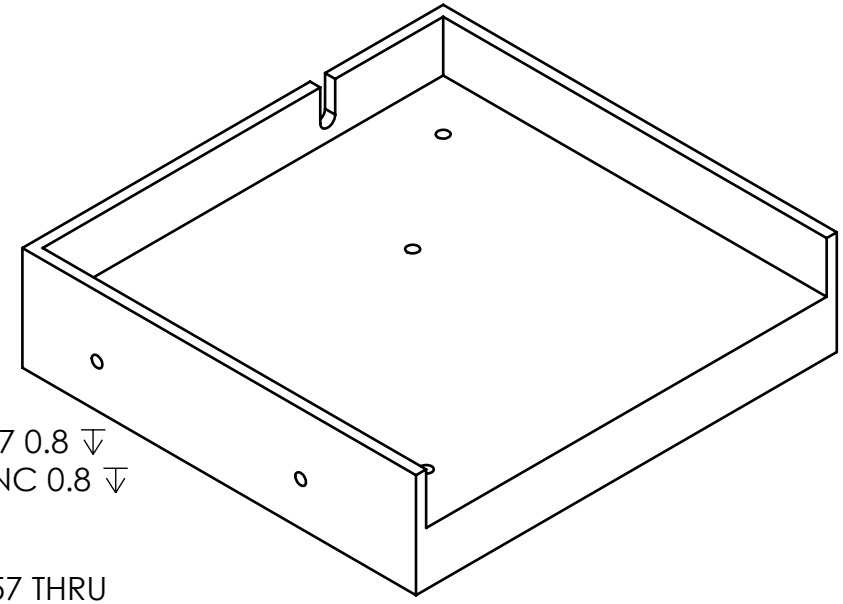

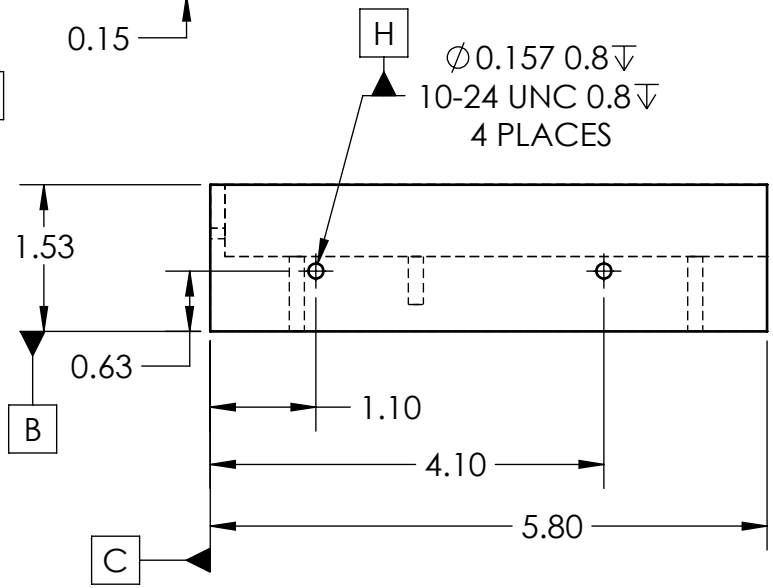

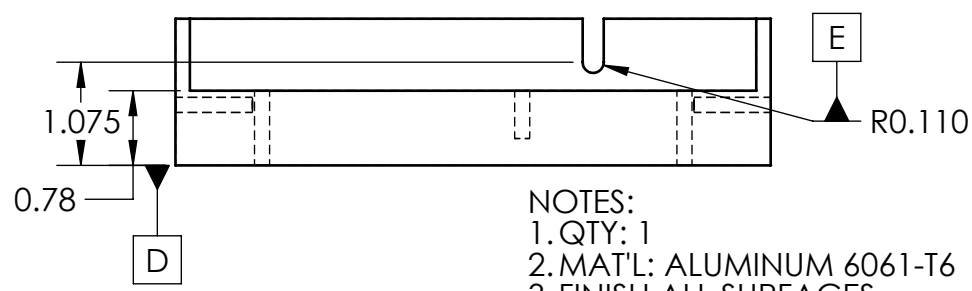

NOTES:
1. QTY: 1
2. MAT'L: ALUMINUM 6061-T6
3. FINISH ALL SURFACES
4. BREAK ALL EDGES
5. DIMS IN INCHES

TOLERANCE UNLESS NOTED				TITLE: Food Holder Group 4A		
OPERATION	PLACES IN DIMENSION					
	0.0	0.00	0.000	DRAWN	BRYCE ADDEO	
MACHINING	±0.050	±0.020	±0.005	DESIGNED	ANTHONY WEAVER	
CUT OFF (SAW, BURN, SHEAR)	±0.1	±0.060		SIZE A	DWG. NO. EML2322L_G4A-2	REV A
WELDING	±0.1	±0.060				
ANGULAR DIMS	±5	±2	±0.5	SCALE: 1:2		SHEET 1 OF 5

5 4 3 2 1

SOLIDWORKS Educational Product. For Instructional Use Only.

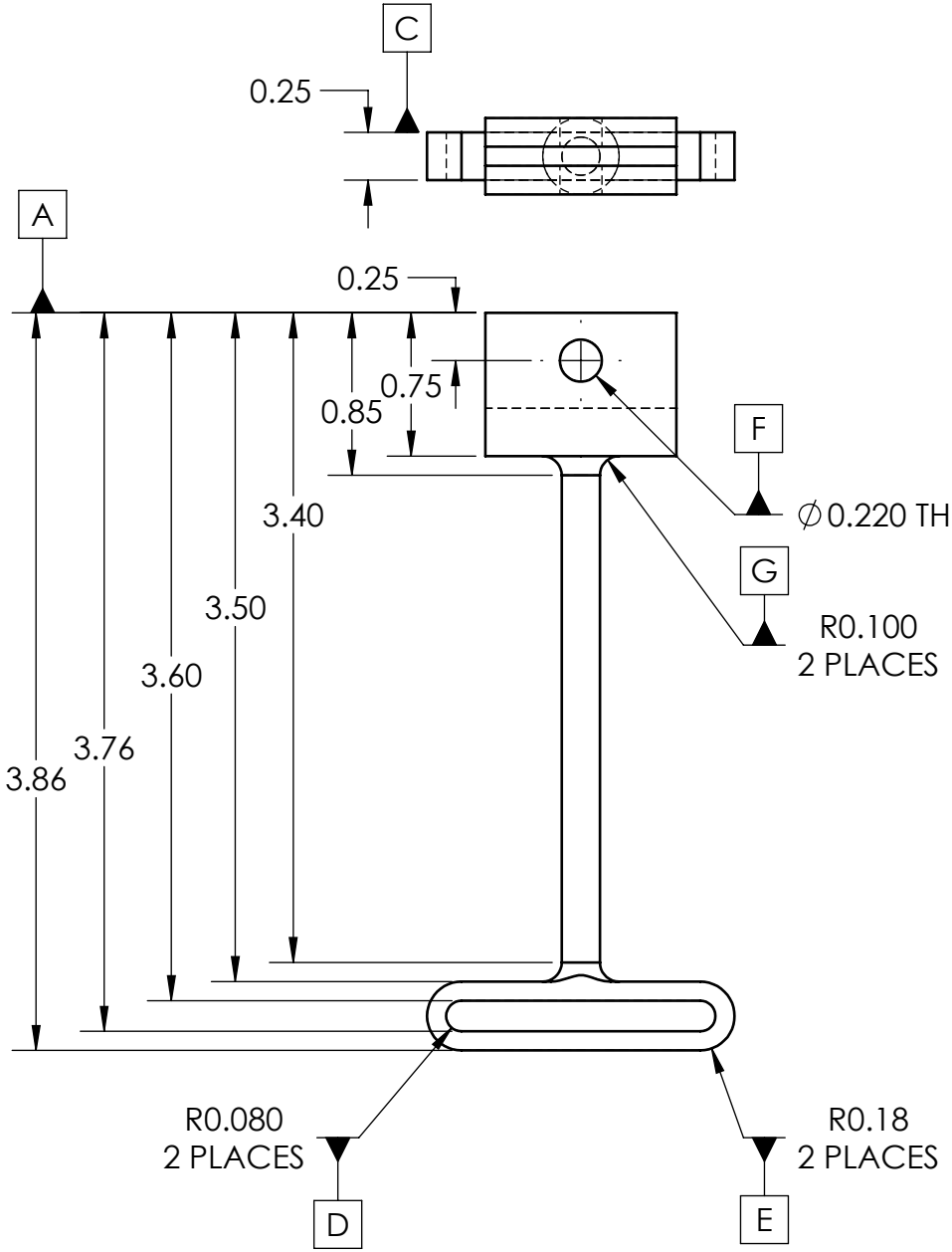

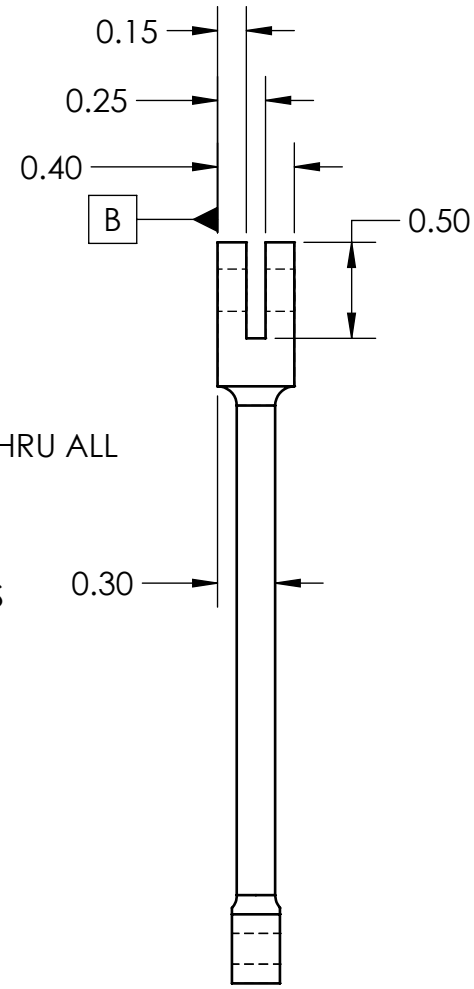

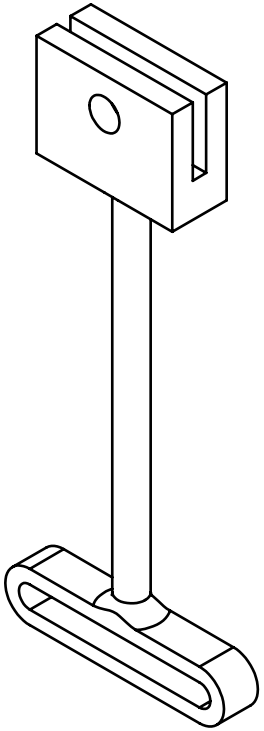

NOTES:
1.QTY: 1
2.MAT'L: A36 (LOW CARBON STEEL)
3.FINISH ALL SURFACES
4.BREAK ALL EDGES
5.DIMS IN INCHES

TOLERANCE UNLESS NOTED				TITLE: Scotch Yoke Group 4A		
OPERATION	PLACES IN DIMENSION					
	0.0	0.00	0.000	DRAWN	BRYCE ADDEO	
MACHINING	±0.050	±0.020	±0.005	DESIGNED	ANTHONY WEAVER	
CUT OFF (SAW, BURN, SHEAR)	±0.1	±0.060		SIZE	DWG. NO.	REV
WELDING	±0.1	±0.060		A	EML2322L_G4A-3	A
ANGULAR DIMS	±5	±2	±0.5	SCALE: 1:1		SHEET 1 OF 5

5 4 3 2 1

SOLIDWORKS Educational Product. For Instructional Use Only.

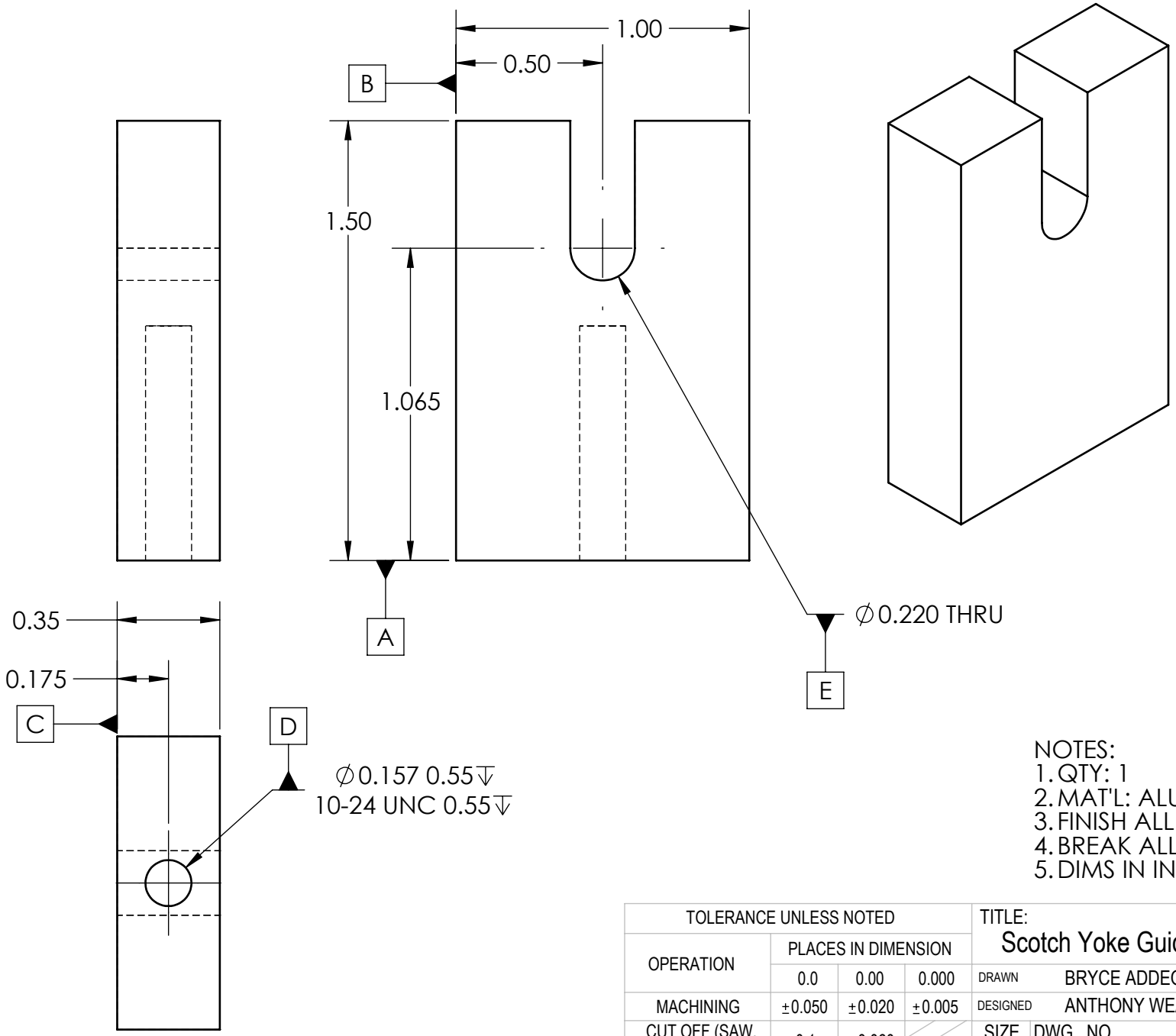

NOTES:
1. QTY: 1
2. MAT'L: ALUMINUM 6061-T6
3. FINISH ALL SURFACES
4. BREAK ALL EDGES
5. DIMS IN INCHES

TOLERANCE UNLESS NOTED				TITLE: Scotch Yoke Guide Path Group 4A		
OPERATION	PLACES IN DIMENSION					
	0.0	0.00	0.000	DRAWN	BRYCE ADDEO	
MACHINING	±0.050	±0.020	±0.005	DESIGNED	ANTHONY WEAVER	
CUT OFF (SAW, BURN, SHEAR)	±0.1	±0.060		SIZE	DWG. NO.	REV
WELDING	±0.1	±0.060		A	EML2322L_G4A-4	A
ANGULAR DIMS	±5	±2	±0.5	SCALE: 2:1		SHEET 1 OF 5

5 4 3 2 1

SOLIDWORKS Educational Product. For Instructional Use Only.

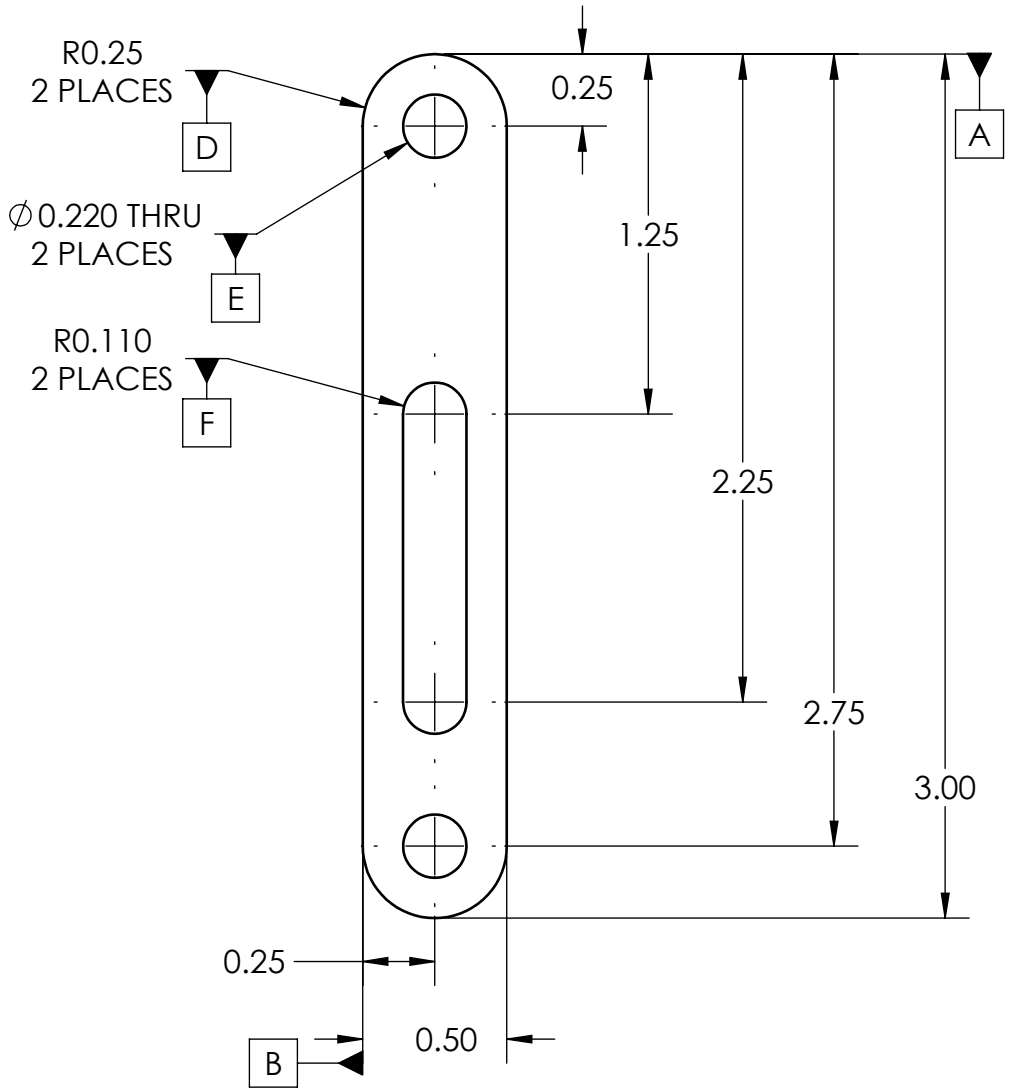

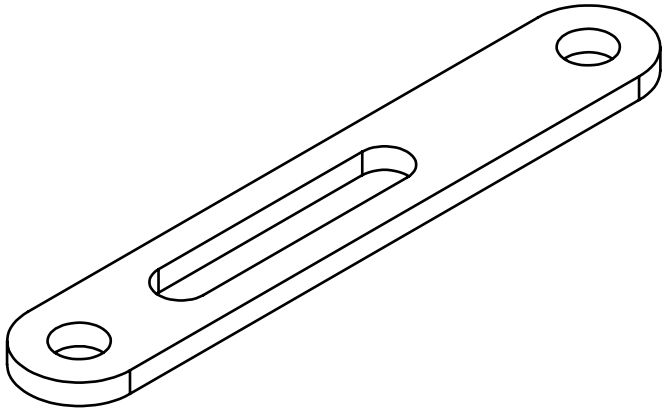

NOTES:
1. QTY: 1
2. MAT'L: A36 (LOW CARBON STEEL)
3. FINISH ALL SURFACES
4. BREAK ALL EDGES
5. DIMS IN INCHES

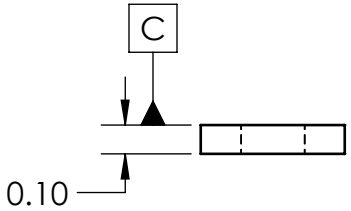

TOLERANCE UNLESS NOTED			
OPERATION	PLACES IN DIMENSION		
	0.0	0.00	0.000
MACHINING	±0.050	±0.020	±0.005
CUT OFF (SAW, BURN, SHEAR)	±0.1	±0.060	
WELDING	±0.1	±0.060	
ANGULAR DIMS	±5	±2	±0.5

TITLE: Lever Group 4A

DRAWN: BRYCE ADDEO

DESIGNED: ANTHONY WEAVER

SIZE	DWG. NO.	REV
A	EML2322L_G4A-5	A

SCALE: 3:2

SHEET 1 OF 5

5 4 3 2 1

SOLIDWORKS Educational Product. For Instructional Use Only.

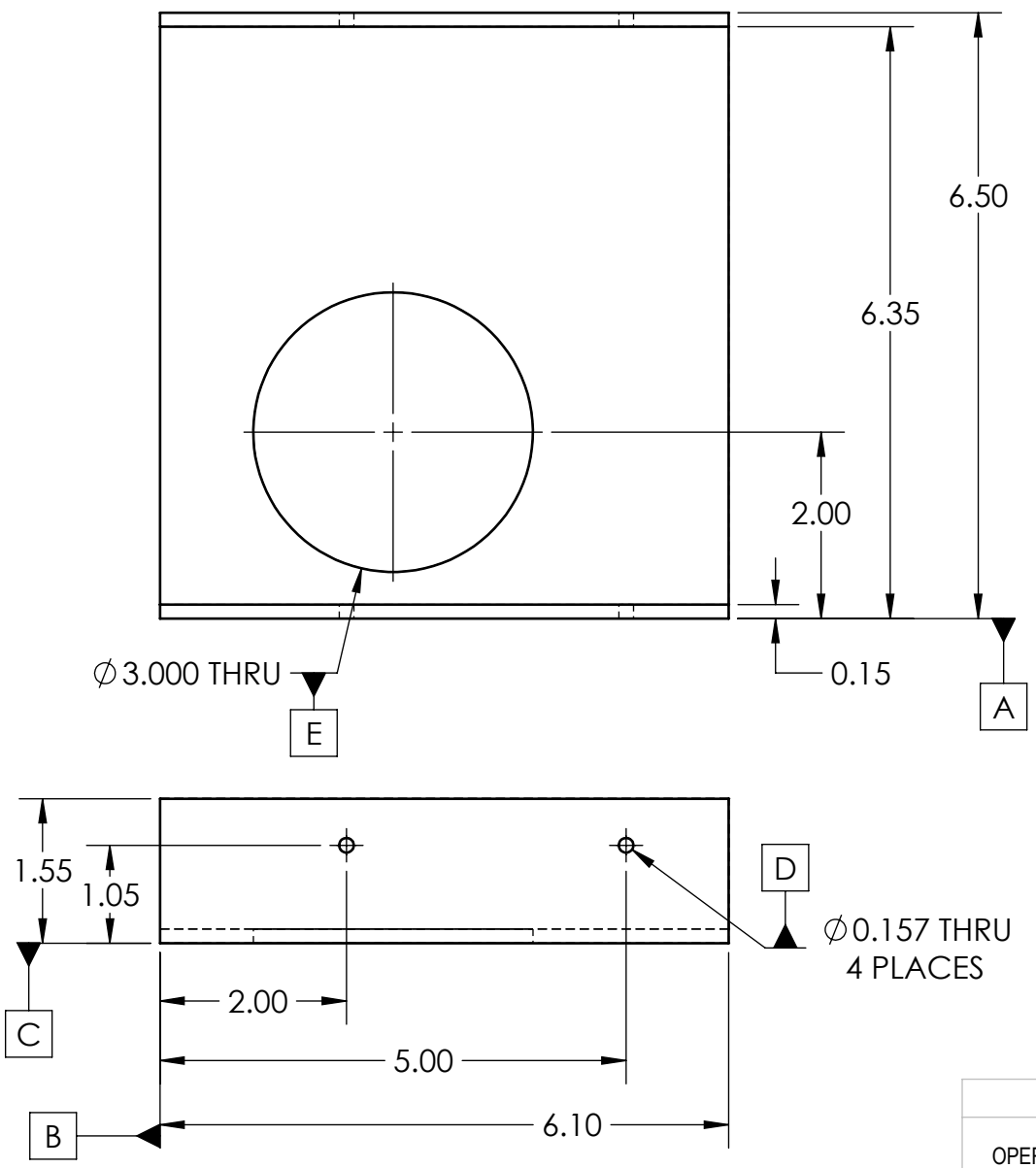

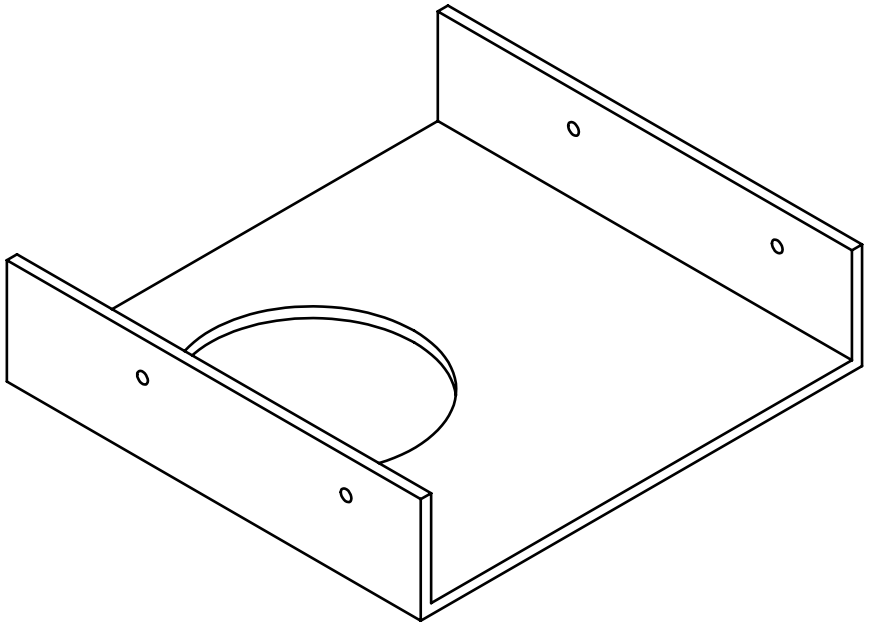

NOTES:
1. QTY: 1
2. MAT'L: 3D PRINTED PLA
3. FINISH NO SURFACES
4. REMOVE SUPPORT MATERIAL
5. DIMS IN INCHES

TOLERANCE UNLESS NOTED				TITLE: Cover Group 4A		
OPERATION	PLACES IN DIMENSION					
	0.0	0.00	0.000	DRAWN	BRYCE ADDEO	
MACHINING	±0.050	±0.020	±0.005	DESIGNED	ANTHONY WEAVER	
CUT OFF (SAW, BURN, SHEAR)	±0.1	±0.060		SIZE	DWG. NO.	REV
WELDING	±0.1	±0.060		A	EML2322L_G4A-6	A
ANGULAR DIMS	±5	±2	±0.5	SCALE: 1:2		SHEET 1 OF 5

5 4 3 2 1

SOLIDWORKS Educational Product. For Instructional Use Only.

Appendix B: Manufacturing Inspection Records

EML 2322L MANUFACTURING INSPECTION RECORD

Part Number	*Revision*	*Part Name*	*Team Number*	*Machinist:*
EML2322L_G4A-1	A	Base	4A	TBD
				Inspector:
				TBD

No.	Ref. Location	Feature Type	Measurement Tool/Type	Requirement	Lower Bound	Upper Bound	Units	Results	Comments
1	A	Linear Dimension	Caliper	1.05	1.03	1.07	Inches		
2	A	Linear Dimension	Caliper	4.50	4.48	4.52	Inches		
3	A	Linear Dimension	Caliper	5.45	5.43	5.47	Inches		
4	A	Linear Dimension	Caliper	6.50	6.48	6.52	Inches		
5	B	Linear Dimension	Caliper	0.175	0.170	0.180	Inches		
6	B	Linear Dimension	Caliper	1.35	1.33	1.37	Inches		
7	B	Linear Dimension	Caliper	5.50	5.48	5.52	Inches		
8	B	Linear Dimension	Caliper	6.55	6.53	6.57	Inches		
9	C	Diameter	Caliper	0.157	0.152	0.162	Inches		
10	C	Thread	Thread Gauge or Fastener	10-24 UNC	-	-	Inches		
11	C	Diameter	Caliper	0.157	0.152	0.162	Inches		
12	C	Thread	Thread Gauge or Fastener	10-24 UNC	-	-	Inches		
13	C	Diameter	Caliper	0.157	0.152	0.162	Inches		
14	C	Thread	Thread Gauge or Fastener	10-24 UNC	-	-	Inches		
15	D	Linear Dimension	Caliper	0.20	0.18	0.22	Inches		
16	Notes	Note	Visual	Finish noted surfaces	-	-	-		
17	Notes	Note	Visual	Break all edges	-	-	-		

		RESULT:	PASS
Inspector Signature:	TBD	FAIL	☐ Remanufacture
Group Member 1:	Bryce Addeo		☐ Rework
Group Member 2:	Krittin Jindamai		☐ Engineering Change
Group Member 3	Holden Kapsos	TA Signature	
Group Member 4	Anthony Weaver		

EML 2322L MANUFACTURING INSPECTION RECORD

Part Number	*Revision*	*Part Name*	*Team Number*	*Machinist:*
EML2322L_G4A-2	A	Food Holder	4A	TBD
				Inspector:
				TBD

No.	Ref. Location	Feature Type	Measurement Tool/Type	Requirement	Lower Bound	Upper Bound	Units	Results	Comments
1	A	Linear Dimension	Caliper	0.15	0.13	0.17	Inches		
2	A	Linear Dimension	Caliper	0.90	0.88	0.92	Inches		
3	A	Linear Dimension	Caliper	3.61	3.59	3.63	Inches		
4	A	Linear Dimension	Caliper	5.30	5.28	5.32	Inches		
5	A	Linear Dimension	Caliper	6.05	6.03	6.07	Inches		
6	A	Linear Dimension	Caliper	6.20	6.18	6.22	Inches		
7	B	Linear Dimension	Caliper	0.63	0.61	0.65	Inches		
8	B	Linear Dimension	Caliper	1.53	1.51	1.55	Inches		
9	C	Linear Dimension	Caliper	1.10	1.08	1.12	Inches		
10	C	Linear Dimension	Caliper	4.10	4.08	4.12	Inches		
11	C	Linear Dimension	Caliper	5.80	5.78	5.82	Inches		
12	D	Linear Dimension	Caliper	0.78	0.76	0.80	Inches		
13	D	Linear Dimension	Caliper	1.075	1.070	1.080	Inches		
14	E	Filet Radius	Caliper	0.110	0.105	0.115	Inches		
15	F	Diameter	Caliper	0.157	0.152	0.162	Inches		
16	F	Thread	Thread Gauge or Fastener	10-24 UNC	-	-	Inches		
17	F	Diameter	Caliper	0.157	0.152	0.162	Inches		

18	F	Thread	Thread Gauge or Fastener	10-24 UNC	-	-	Inches		
19	G	Diameter	Caliper	0.157	0.152	0.162	Inches		
20	G	Thread	Thread Gauge or Fastener	10-24 UNC	-	-	Inches		
21	H	Diameter	Caliper	0.157	0.152	0.162	Inches		
22	H	Thread	Thread Gauge or Fastener	10-24 UNC	-	-	Inches		
23	H	Diameter	Caliper	0.157	0.152	0.162	Inches		
24	H	Thread	Thread Gauge or Fastener	10-24 UNC	-	-	Inches		
25	H	Diameter	Caliper	0.157	0.152	0.162	Inches		
26	H	Thread	Thread Gauge or Fastener	10-24 UNC	-	-	Inches		
27	H	Diameter	Caliper	0.157	0.152	0.162	Inches		
28	H	Thread	Thread Gauge or Fastener	10-24 UNC	-	-	Inches		
29	Notes	Note	Visual	Finish noted surfaces	-	-	-		
30	Notes	Note	Visual	Break all edges	-	-	-		
							RESULT:	PASS	

Inspector Signature:	TBD		FAIL	☐ Remanufacture
Group Member 1:	Bryce Addeo			☐ Rework
Group Member 2:	Krittin Jindamai			☐ Engineering Change
Group Member 3	Holden Kapsos	TA Signature		
Group Member 4	Anthony Weaver			

EML 2322L MANUFACTURING INSPECTION RECORD

Part Number	*Revision*	*Part Name*	*Team Number*	*Machinist:*
EML2322L_G4A-3	A	Scotch Yoke	4A	TBD
				Inspector:
				TBD

No.	Ref. Location	Feature Type	Measurement Tool/Type	Requirement	Lower Bound	Upper Bound	Units	Results	Comments
1	A	Linear Dimension	Caliper	0.25	0.23	0.27	Inches		
2	A	Linear Dimension	Caliper	0.50	0.48	0.52	Inches		
3	A	Linear Dimension	Caliper	0.75	0.73	0.77	Inches		
4	A	Linear Dimension	Caliper	0.85	0.83	0.87	Inches		
5	A	Linear Dimension	Caliper	3.40	3.38	3.42	Inches		
6	A	Linear Dimension	Caliper	3.50	3.48	3.52	Inches		
7	A	Linear Dimension	Caliper	3.60	3.58	3.62	Inches		
8	A	Linear Dimension	Caliper	3.76	3.74	3.78	Inches		
9	A	Linear Dimension	Caliper	3.86	3.84	3.88	Inches		
10	B	Linear Dimension	Caliper	0.15	0.13	0.17	Inches		
11	B	Linear Dimension	Caliper	0.25	0.23	0.27	Inches		
12	B	Linear Dimension	Caliper	0.30	0.28	0.32	Inches		
13	B	Linear Dimension	Caliper	0.40	0.38	0.42	Inches		
14	C	Linear Dimension	Caliper	0.25	0.23	0.27	Inches		
15	D	Filet Radius	Caliper	0.080	0.075	0.085	Inches		
16	D	Filet Radius	Caliper	0.080	0.075	0.085	Inches		
17	E	Filet Radius	Caliper	0.18	0.16	0.20	Inches		

18	E	Filet Radius	Caliper	0.18	0.16	0.20	Inches		
19	F	Diameter	Caliper	0.220	0.215	0.225	Inches		
20	G	Filet Radius	Caliper	0.100	0.995	0.105	Inches		
21	G	Filet Radius	Caliper	0.100	0.995	0.105	Inches		
22	Notes	Note	Visual	Finish noted surfaces	-	-	-		
23	Notes	Note	Visual	Break all edges	-	-	-		
							RESULT:	PASS	

Inspector Signature:	TBD		FAIL	☐ Remanufacture
Group Member 1:	Bryce Addeo			☐ Rework
Group Member 2:	Krittin Jindamai			☐ Engineering Change
Group Member 3	Holden Kapsos	TA Signature		
Group Member 4	Anthony Weaver			

EML 2322L MANUFACTURING INSPECTION RECORD

Part Number	*Revision*	*Part Name*	*Team Number*	*Machinist:*
EML2322L_G4A-4	A	Scotch Yoke Guide Path	4A	TBD
				Inspector:
				TBD

No.	Ref. Location	Feature Type	Measurement Tool/Type	Requirement	Lower Bound	Upper Bound	Units	Results	Comments
1	A	Linear Dimension	Caliper	1.065	1.060	1.070	Inches		
2	A	Linear Dimension	Caliper	1.50	1.48	1.52	Inches		
3	B	Linear Dimension	Caliper	0.50	0.48	0.52	Inches		
4	B	Linear Dimension	Caliper	1.00	0.98	1.02	Inches		
5	C	Linear Dimension	Caliper	0.175	0.170	0.180	Inches		
6	C	Linear Dimension	Caliper	0.35	0.33	0.37	Inches		
7	D	Diameter	Caliper	0.157	0.152	0.162	Inches		
8	D	Thread	Thread Gauge or Fastener	10-24 UNC	-	-	Inches		
9	E	Diameter	Diameter	0.220	0.215	0.225	Inches		
10	Notes	Note	Visual	Finish noted surfaces	-	-	-		
11	Notes	Note	Visual	Break all edges	-	-	-		
								RESULT:	PASS

Inspector Signature:	TBD		FAIL	☐ Remanufacture
Group Member 1:	Bryce Addeo			☐ Rework
Group Member 2:	Krittin Jindamai			☐ Engineering Change
Group Member 3	Holden Kapsos	TA Signature		
Group Member 4	Anthony Weaver			

EML 2322L MANUFACTURING INSPECTION RECORD

Part Number	*Revision*	*Part Name*	*Team Number*	*Machinist:*
EML2322L_G4A-5	A	Lever	4A	TBD
				Inspector:
				TBD

No.	Ref. Location	Feature Type	Measurement Tool/Type	Requirement	Lower Bound	Upper Bound	Units	Results	Comments
1	A	Linear Dimension	Caliper	0.25	0.23	0.27	Inches		
2	A	Linear Dimension	Caliper	1.25	1.23	1.27	Inches		
3	A	Linear Dimension	Caliper	2.25	2.23	2.27	Inches		
4	A	Linear Dimension	Caliper	2.75	2.73	2.77	Inches		
5	A	Linear Dimension	Caliper	3.00	2.98	3.02	Inches		
6	B	Linear Dimension	Caliper	0.25	0.23	0.27	Inches		
7	B	Linear Dimension	Caliper	0.50	0.48	0.52	Inches		
8	C	Linear Dimension	Caliper	0.10	0.08	0.12	Inches		
9	D	Filet Radius	Caliper	0.25	0.23	0.27	Inches		
10	D	Filet Radius	Caliper	0.25	0.23	0.27	Inches		
11	E	Diameter	Caliper	0.220	0.215	0.225	Inches		
12	E	Diameter	Caliper	0.220	0.215	0.225	Inches		
13	F	Filet Radius	Caliper	0.110	0.105	0.115	Inches		
14	F	Filet Radius	Caliper	0.110	0.105	0.115	Inches		
							RESULT:	PASS	

Inspector Signature:	TBD		FAIL	☐ Remanufacture
Group Member 1:	Bryce Addeo			☐ Rework
Group Member 2:	Krittin Jindamai			☐ Engineering Change
Group Member 3	Holden Kapsos	TA Signature		
Group Member 4	Anthony Weaver			

EML 2322L MANUFACTURING INSPECTION RECORD

Part Number	*Revision*	*Part Name*	*Team Number*	*Machinist:*
EML2322L_G4A-6	A	Cover	4A	TBD
				Inspector:
				TBD

No.	Ref. Location	Feature Type	Measurement Tool/Type	Requirement	Lower Bound	Upper Bound	Units	Results	Comments
1	A	Linear Dimension	Caliper	0.15	0.13	0.17	Inches		
2	A	Linear Dimension	Caliper	2.00	1.98	2.02	Inches		
3	A	Linear Dimension	Caliper	6.35	6.33	6.37	Inches		
4	A	Linear Dimension	Caliper	6.50	6.48	6.52	Inches		
5	B	Linear Dimension	Caliper	2.00	1.98	2.02	Inches		
6	B	Linear Dimension	Caliper	5.00	4.98	5.02	Inches		
7	B	Linear Dimension	Caliper	6.10	6.08	6.12	Inches		
8	C	Linear Dimension	Caliper	1.05	1.03	1.07	Inches		
9	C	Linear Dimension	Caliper	1.55	1.53	1.57	Inches		
10	D	Diameter	Caliper	0.157	0.152	0.162	Inches		
11	D	Diameter	Caliper	0.157	0.152	0.162	Inches		
12	D	Diameter	Caliper	0.157	0.152	0.162	Inches		
13	D	Diameter	Caliper	0.157	0.152	0.162	Inches		
14	E	Diameter	Caliper	3.000	2.995	3.005	Inches		
								RESULT:	PASS

Inspector Signature:	TBD		FAIL	☐ Remanufacture
Group Member 1:	Bryce Addeo			☐ Rework
Group Member 2:	Krittin Jindamai			☐ Engineering Change
Group Member 3	Holden Kapsos	TA Signature		
Group Member 4	Anthony Weaver			

Appendix C: Manufacturing Process Outlines

Base [1]	
Manufacturing Processes	**Process Setup**
Mark and Cut 8.00" x 8.00" x 0.25" Al stock in Bandsaw Load 1" End Mill into the Milling Machine Load Part into the Mill Vise Using Parallels (Orientation 1) Remove the Parallels from the Vise Do Destructive Zeroing on the Z-Axis Mill Part to (0.22") [A] Finish Surface / Mill Part to (0.21") [A] Do Destructive Zeroing on the X-Axis Face First Pair of Sides to Final Lenght (6.50") Using Finish Pass for Both Sides [B] Unload Part from the Vise Reload Part into the Mill Vise Using Parallels (Orientation 2) Remove the Parallels from the Vise Do Destructive Zeroing on the Z-Axis Finish Surface / Mill Part to (0.20") [C] Do Destructive Zeroing on the X-Axis Face Second Pair of Sides to Final Width (6.55") Using Finish Pass for Both Sides [D] Use Edge Finder to Find and Re-Zero X and Y Axes Unload End Mill and Load Center Drill into the Collet Drill (3) Center Holes [E] Unload Center Drill and Load 0.157" Drill into the Collet Drill (3) 0.157" Holes, THRU [E] Unload Unload 0.157" Drill and Load 10-24 UNC Tap, Tap Holder, and Tap Guide into the Collet Tap (3) 10-24 UNC" Holes, THRU [E] Unload Tools and Part from the Vise Debur (3) Holes [E] File all Edges Clean the Machine When Finish	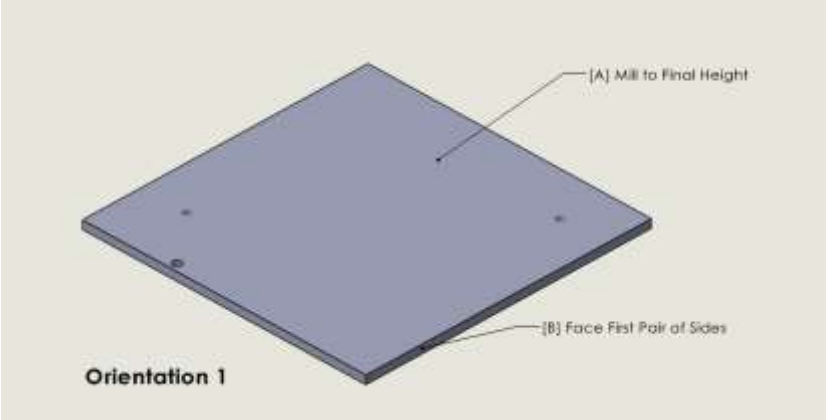 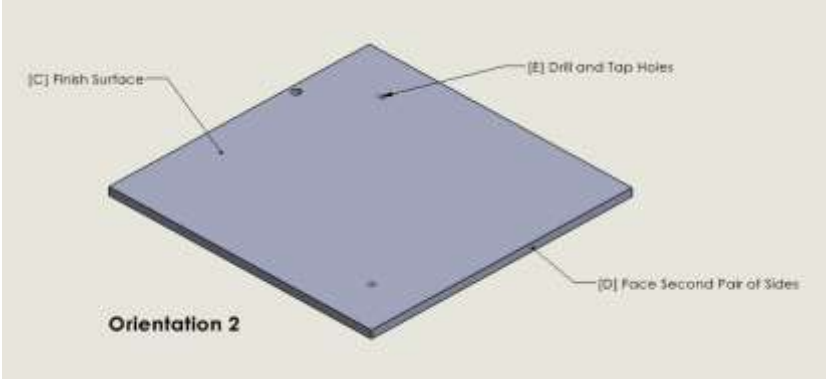

Food Holder [2]	
Manufacturing Processes	**Process Setup**
Mark and Cut 2" x 48" x 0.375" Al stock in Bandsaw	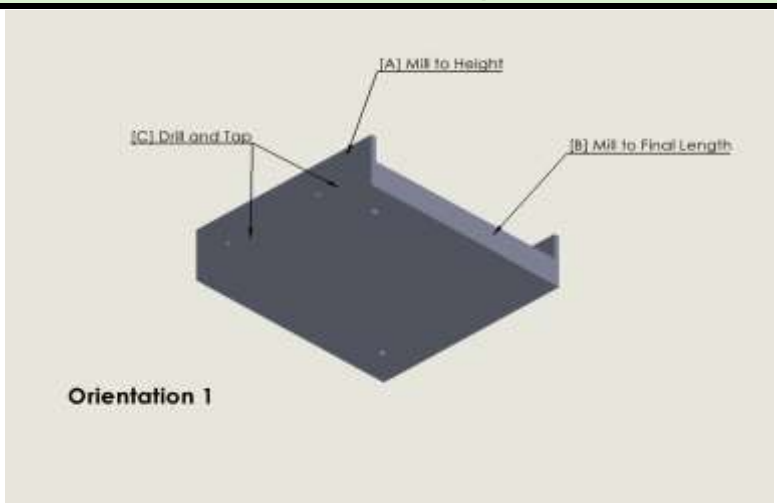
Load End Mill into the Milling Machine	
Load Part into the Mill Vise Using Parallels (Orientation 1)	
Do Destructive Zeroing on the Z-Axis	
Use Edge Finder to Find and Zero X and Y Axes	
Mill Part to (6.50") Using a Finishing Pass Last [A]	
Mill Side of Part to (5.80") Using a Finishing Pass Last [B]	
Unload End Mill and Load Center Drill into the Collet	
Drill (2) Center Holes [C]	
Unload Center Drill and Load 0.157'' Drill into the Collet	
Drill (2) 0.157'' Holes, 0.8" Deep [C]	
Unload 0.157'' Drill and Load 10-24 Tap into the Collet	
Tap (2) 10-24 UNC'' Holes, 0.8" Deep [C]	
Unload 10-24 Tap and Load End Mill into the Collet	
Unload Part from the Vise	
Reload Part into the Mill Vise Using Parallels (Orientation 2)	
Do Destructive Zeroing on the Z-Axis	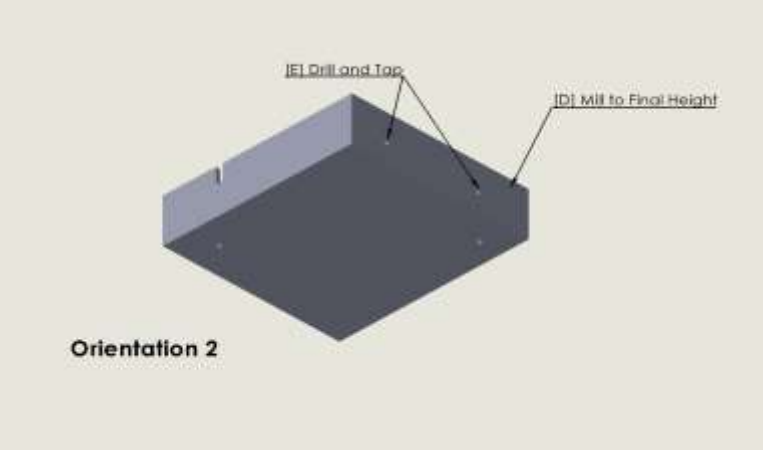
Mill Part to (6.20") Using a Finishing Pass Last [D]	
Unload End Mill and Load Center Drill into the Collet	
Drill (2) Center Holes [E]	
Unload Center Drill and Load 0.157'' Drill into the Collet	
Drill (2) 0.157'' Holes, 0.8" Deep [E]	
Unload 0.157'' Drill and Load 10-24 Tap into the Collet	
Tap (2) 10-24 UNC'' Holes, 0.8" Deep [E]	
Unload 10-24 Tap and Load End Mill into the Collet	
Unload Part from the Vise	
Reload Part into the Mill Vise Using Parallels (Orientation 3)	
Do Destructive Zeroing on the Z-Axis	
Use Edge Finder to Find and Zero X and Y Axes	
Mill Part to (1.53") Using a Finishing Pass Last [F]	

Mill Inside of Part to (0.78") Using a Finishing Pass Last [G]
Unload End Mill and Load Center Drill into the Collet
Drill (1) Center Hole [H]
Unload Center Drill and Load 0.22" Drill into the Collet
Drill (1) 0.220'' Holes, 0.455" Deep [H]
Unload 0.220" Drill and Load Center Drill into the Collet
Drill (2) Center Holes [I]
Unload Center Drill and Load 0.157'' Drill into the Collet
Drill (2) 0.157'' Holes, THRU [I]
Unload 0.157'' Drill and Load 10-24 Tap into the Collet
Tap (2) 10-24 UNC'' Holes, THRU [I]
Unload 10-24 Tap and Load Center Drill into the Collet
Drill (1) Center Hole [J]
Unload Center Drill and Load 0.157'' Drill into the Collet
Drill (1) 0.157" Hole, 0.8" Deep [J]
Unload 0.157'' Drill and Load 10-24 Tap into the Collet
Tap (1) 10-24 UNC'' Holes, 0.8" Deep [J]
Unload Part from the Vise
Debur All Holes
Break All Edges
Clean the Machine When Finish

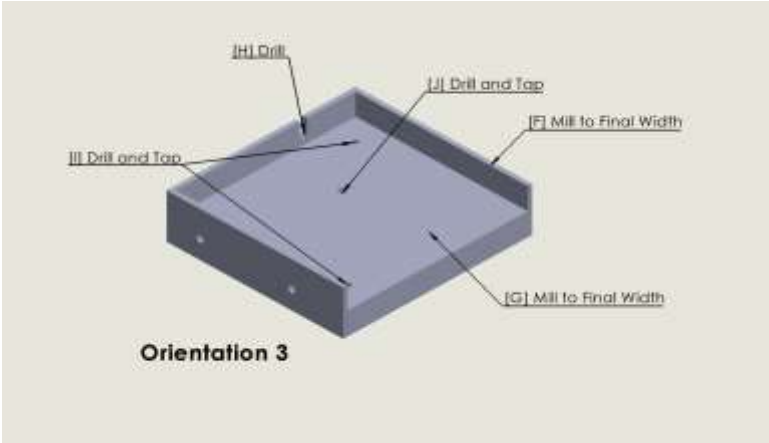

Scotch Yoke [3]	
Manufacturing Processes	**Process Setup**
Mark and Cut 4" x 4" x 0.5" Steel Stock on Bandsaw Load End Mill into the Milling Machine Load Part into Vise Using Parallels Use Edge Finder to Find and Zero X and Y Axes Drill (1) Center Hole [A] Drill (1) 0.20" Clearance Hole THRU [A] Unload Part from the Vise Load Part into CNC Machine Allow CNC Machine to Finish the Part Take Part out of CNC Machine Clean All Machines Used	

Guide Path [4]	
Manufacturing Processes	**Process Setup**
Mark and Cut 2.00" x 48.00" x 0.375" Al Stock in Bandsaw Load End Mill into the Milling Machine Load Part into Vise Using Parallels (Orientation 1) Do Destructive Zeroing on the Z-Axis Use Edge Finder to Find and Zero X and Y Axes Mill Part to (0.35") Using a Finishing Pass Last [A] Mill Side of Part to (1.00") Using a Finishing Pass Last [B] Drill (2) 0.190'' Holes, THRU [C] Unload 0.190'' Drill and Load 3/18'' 2-Flutes Cutter into the Collet Mill the slot [C] Unload Part from the Vise Reload Part into the Mill Vise Using Parallels (Orientation 2) Unload 3/18'' 2-Flutes Cutter and Load End Mill into the Collet Do Destructive Zeroing on the Z-Axis Unload End Mill and Load Edge Finder into the Collet Use Edge Finder to Find and Zero X and Y Axes Unload Edge Finder and Load End Mill into the Collet Mill Part to (1.5") Using a Finishing Pass Last [D] Unload End Mill and Load Center Drill into the Collet Drill (1) Center Hole [E] Unload Center Drill and Load 0.157'' Drill into the Collet Drill (1) 0.157'' Hole, 0.55" Deep [E] Unload 0.157'' Drill and Load 10-24 Tap into the Collet Tap (1) 10-24 UNC'' Hole, 0.55" Deep [E] Unload Part from the Vise Debur All Holes [C and E] Break All Edges Clean the Machine When Finish	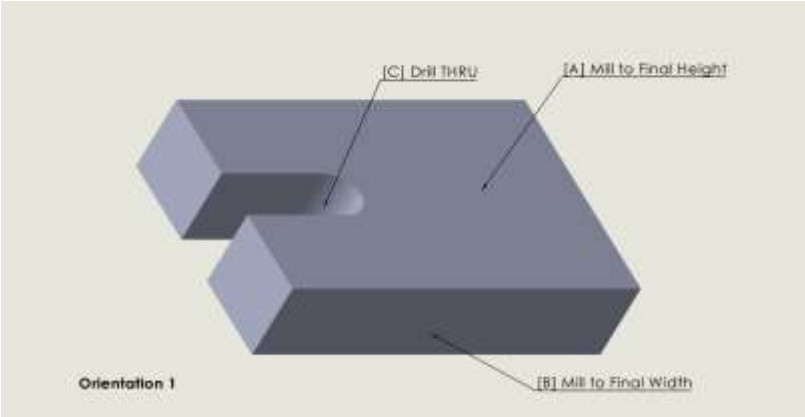 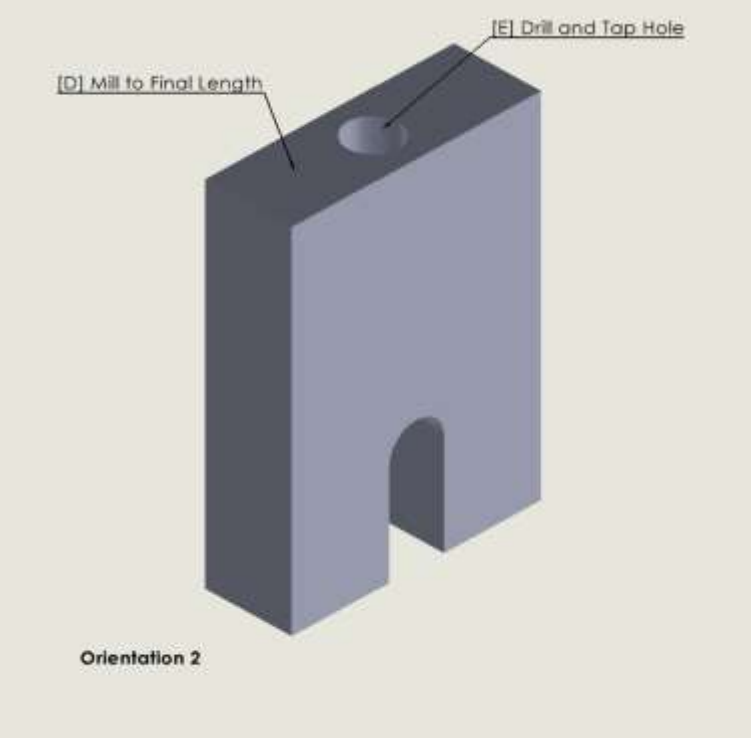

Lever [5]	
Manufacturing Processes	**Process Setup**
Mark and Cut 4.00" x 4.00" x 0.125" Steel stock in Bandsaw	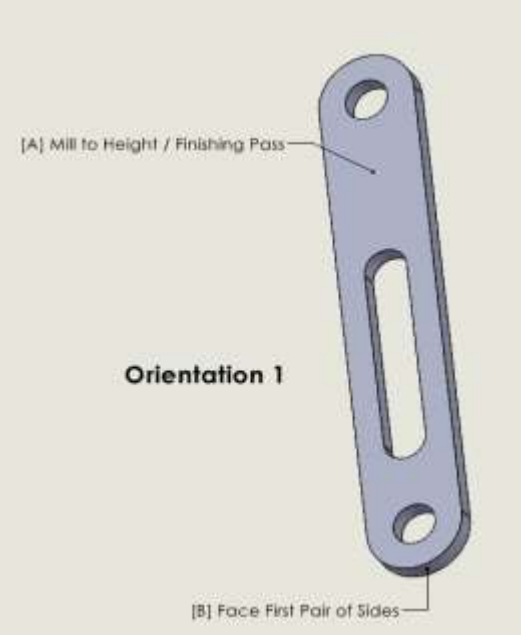
Load 1/2" End Mill into the Milling Machine	
Load Part into the Mill Vise Using Parallels (Orientation 1)	
Remove the Parallels from the Vise	
Do Destructive Zeroing on the Z-Axis	
Mill Part to Height (0.12") [A]	
Finish Surface / Mill Part to (0.21") [A]	
Do Destructive Zeroing on the X-Axis	
Face First Pair of Sides to Final Lenght (0.50") [B]	
Unload Part from the Vise	
Reload Part into the Mill Vise Using Parallels (Orientation 2)	
Remove the Parallels from the Vise	
Do Destructive Zeroing on the Z-Axis	
Finish Surface / Mill Part to (0.20") [C]	
Do Destructive Zeroing on the X-Axis	
Face Second Pair of Sides to Final Width (3.00") [D]	
Use Edge Finder to Find and Re-Zero X and Y Axes	
Unload End Mill and Load Center Drill into the Collet	
Drill (2) Center Holes [E]	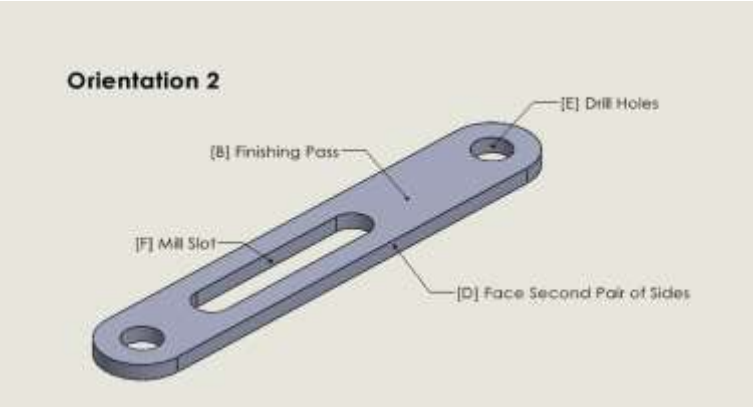
Unload Center Drill and Load 0.190" Drill into the Collet	
Drill (2) 0.190" Holes, THRU [E]	
Unload 0.190" Drill and Load 3/18" 2-Flutes Cutter into the Collet	
Mill the slot [F]	
Unload 2-Flutes Cutter and Load 1/4" Radius Corner Rounding Endmill into the Collet	
Unload Part from the Vise	
Reload Part into the Mill Vise Using Parallels (Orientation 3)	
Remove the Parallels from the Vise	
Mill the Edges to Form the First Circulat Arc [G]	
Unload Part from the Vise	
Reload Part into the Mill Vise Using Parallels (Orientation 4)	
Remove the Parallels from the Vise	
Mill the Edges to Form the Second Circulat Arc [H]	

Unload Tools and Part from the Vise
Debur (2) Holes [E]
Debur (1) Slot [F]
File all Edges
Clean the Machine When Finish

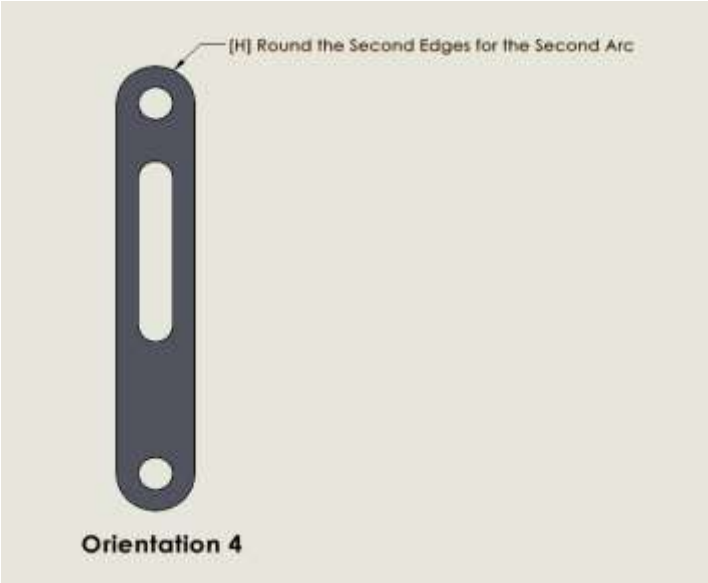
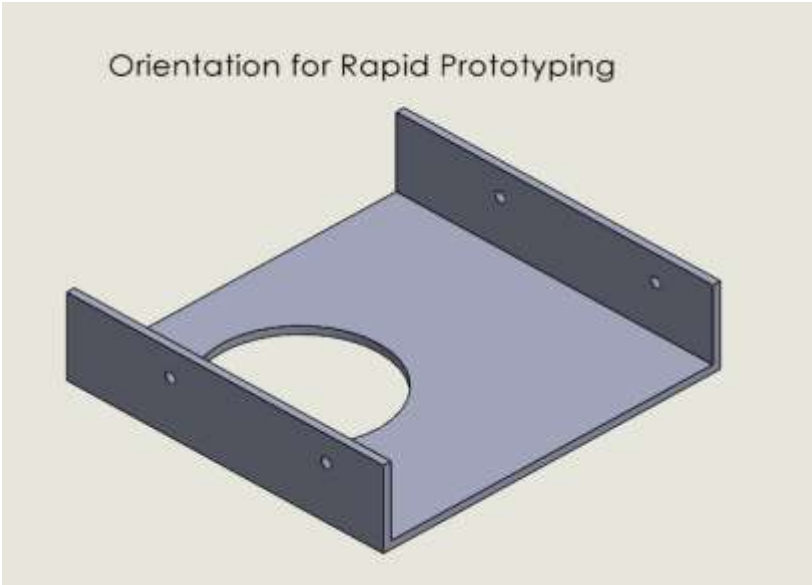
Cover [6]	
Manufacturing Processes	**Process Setup**
Slice CAD Model on Upload G-code onto Printer Setup PLA Filament and Build Plate Print Part Take Part out of the Printer Clean the Printer Clean the Printed Part