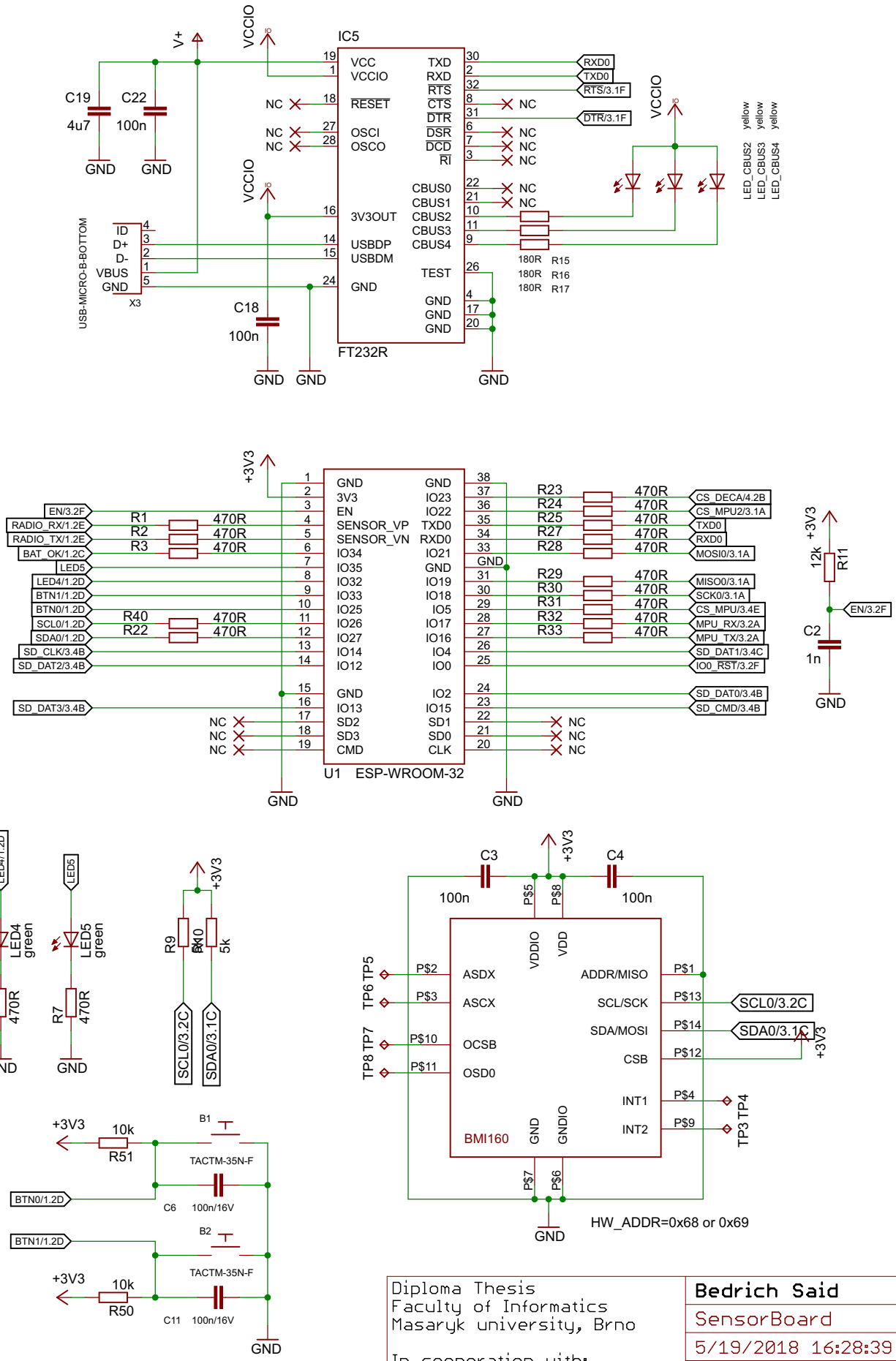

Diploma Thesis
Faculty of Informatics
Masaryk university, Brno

In cooperation with:
Robotarna (RobotikaBrno.cz)

Bedrich Said	
SensorBoard	
5/19/2018 16:28:39	
Sheet: 2/4	v1.0