Probability modeling of biological organization
and
The question of relative probabilities

Boris Saulnier – Dec 12th, 2005
Boris.saulnier@ens.fr
cybob10.free.fr

Outline

- 1-Biology is (should be) about organization
- 2-The oblivion of organization: the multi-origin of the bio networks paradigm
- 3-A probabilistic view of organization: the integration/differenciation compromise
- 4-Remarks about probability theory. The question of relative probabilities

Biology is about organization (1/2)

- A most ancient concept of biology – Biology as the science of organized beings
  - « *L'organisation biologique est un des concepts les plus anciens de la Biologie. Aristote écrivait* συστημμα των μοριων, *les auteurs latins* situs partium, *au XVIIIème siècle en France, on parlait des corps organisés* » (**Thom**, Précis de biologie théorique, 1995)
  - « *Biologie : science qui a pour sujet les êtres organisés, et dont le but est d'arriver, par la connaissance des lois de l'organisation, à connaître les lois des actes que ces êtres manifestent.* » (Littré, Dictionnaire de la Langue Française, 1872)

- A key notion, but undefined
  - « L*es constituants chimiques de la matière vivante, ayant été reconnus identiques à ceux de la matière inanimée au niveau atomique, la seule unité reconnue à l'ensemble des êtres vivants est de l'ordre de l'organisation de ces atomes (…). (l'organisation est une) notion qui apparaît comme tout à fait essentielle dans le discours biologique, sans qu'on soit capable, pourtant, de la définir clairement et quantitativement.* » Atlan, L'organisation biologique et la théorie de l'information, p.217)

Biology is about organization (2/2)

- A fondamental invariant of the living system
  - « *Une machine autopoïétique est un système homéostatique (ou, mieux encore, à relations stables), dont l'invariant fondamental est sa propre organisation (le réseau des relations qui la définit)* » (**Varela**, Autonomie et connaissance, p.45)

- Organization as an ongoing self-maintaining process. Interactions are relative to organization
  - « *Toutes les manifestations de la vie, quelles qu'elles soient et à toutes les échelles, manifestent l'existence d'organisations. (…) Les réactions au milieu sont relatives à l'organisation et l'évolution elle-même n'utilise les hasards qu'en fonction d'organisations progressives. (…) L'organisation (…) est l'action du fonctionnement total sur celui des sous-structures. L'organisation n'est pas transmise héréditairement à la manière d'un caractère de forme ou de couleur: elle se continue et se poursuit, en tant que fonctionnement, à titre de condition nécessaire de toute transmission et non pas à titre de contenu transmis* » (**Piaget**, Biologie et connaissance, p.150)

Organization, before selection?

- Explanations in biology
  - Darwinism (notion of « selection »)
  - Heredity / neo darwinism (heredity factor + selection)
    - Random mutation of heredity factors
  - Organisational closure (Rosen/Varela, +maybe Piaget)
    - Codefinition of the system and its environment
    - No sharp distinction between genotype and phenotype
    - Rather think in terms of « compatibility »
    - Revival of Lamarck?
      - Because « downward causation » is possible
- Selection needs organization
  - If not: selection of what?
  - Any selectionnist explanation needs a notion of « being alive » (being organized or « individuated »)
    - That's what « organisational closure » is for
- Selection without organization faces the « selection level » problem
  - Resolution of this problem calls for an understanding of levels integration
    - Criticality (extended critical processes)
    - Organization (idea of organs, relatively automous parts)
  - Need to put together horizontal relations (at one scale) and vertical relations (between scales)
  - Selection theory is possible if one chooses organisms as THE selection level
    - Hawkins:gene level, Kupiec:cell level, Edelman: neuron (and synapses) level…
  - Eg : the evo/devo separation
    - Devo is the drift of the organism organisation
    - Evo is the drift of the specie organisation

Organization as a « coordinated and maintained activity »

- Intuitively: system + parts + activity + coordination + maintenance
  - A « **system** »
  - « Made of **parts** » (organs)
  - **Coordinated** « **activity** » of the parts, « resulting » in the « **maintaining** » of the system
- Is « coordination » more than criticality?
  - Criticity is about correlation through scales
  - In criticality theories : no notion of organs, modules, parts…
  - Maybe the « parts » notion is an illusion (not an intrinsic property)
- Organization definition : a vicious circle
  - A: Organization (system) := set (class) of parts
  - B: Parts (elements, units) := (sub)systems with functions
  - C: Function : role of a part in the maintaining of the organization

Function : a by-product of organization

- A « can't live witout » notion for any biologist.
- Implicit « differential » definition :
  - The function of part A is « what happens » when I change or remove this part
    - That is Rosen's definition of a « component »
  - This drives most exeriences !
    - Is it enough to identify causes?
    - Very often in biology the same aspect can be produced in many different ways
    - Eg : phenocopy
- Function is about « cutting the loop »
  - By « loop » I mean: causal closure, organisational closure, autopoiesis, sensorimotor loop…
  - The causality inversion aspect of the functional explanation
    - The present activity is explained by an effect in the future
  - Therefore it may be that function is more a description than an explanation
  - The « holism challenge » of biology
- Function in between 2 types of explanation
  - Causal, physical
  - Historical, evolutionnist
  - See Mayr, proximal (molecular pathways) versus distal causes (evolution « built » this behaviour), warbler migration

Outline

- 1-Biology is (should be) about organization
- 2-The oblivion of organization: the multi-origin of the bio networks paradigm
- 3-A probabilistic view of organization: the integration/differenciation compromise
- 4-Remarks about probability theory. The question of relative probabilities

A paradigm:biological networks (and a nice picture)

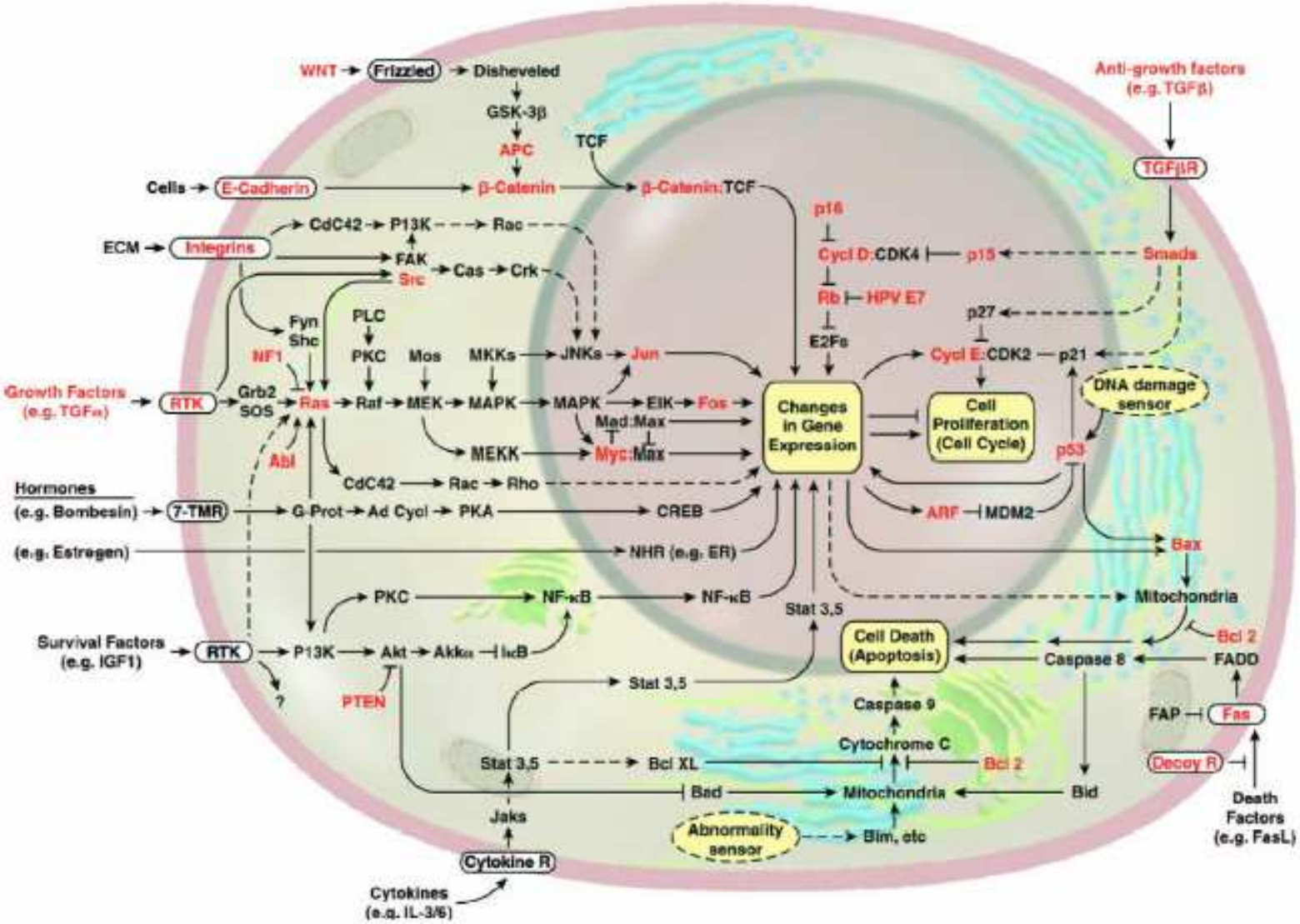

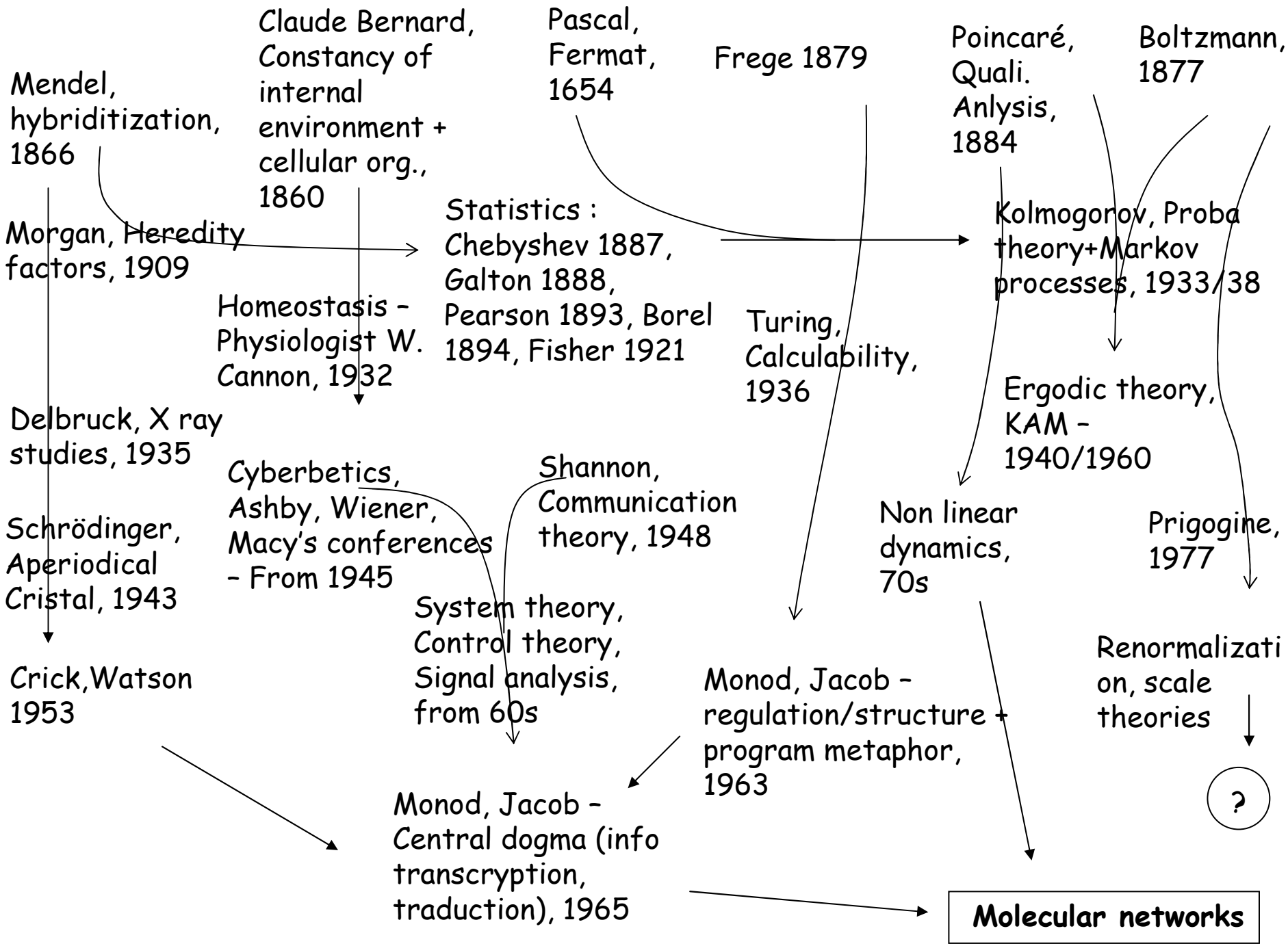
Mendel, hybriditization, 1866
Claude Bernard, Constancy of internal environment + cellular org., 1860
Pascal, Fermat, 1654
Frege 1879
Poincaré, Quali. Anlysis, 1884
Boltzmann, 1877
Morgan, Heredity factors, 1909
Statistics : Chebyshev 1887, Galton 1888, Pearson 1893, Borel 1894, Fisher 1921
Kolmogorov, Proba theory+Markov processes, 1933/38
Homeostasis – Physiologist W. Cannon, 1932
Turing, Calculability, 1936
Ergodic theory, KAM – 1940/1960
Delbruck, X ray studies, 1935
Cyberbetics, Ashby, Wiener, Macy's conferences – From 1945
Shannon, Communication theory, 1948
Non linear dynamics, 70s
Prigogine, 1977
Schrödinger, Aperiodical Cristal, 1943
System theory, Control theory, Signal analysis, from 60s
Renormalization, scale theories
Crick,Watson 1953
Monod, Jacob – regulation/structure + program metaphor, 1963
?
Monod, Jacob – Central dogma (info transcryption, traduction), 1965
Molecular networks

Around stereospecificity: remarks about networks

- Stereospecificity
  - Important role in Jacob/Monod thought (cf Monod Nobel lecture, 1965)
  - Synthesis of proteins regulated by specific molecules (key/lock image)
  - Shape recognition capacity of molecules
  - Inspirated by Schödinger « what's life » : <u>order creation from order</u>
  - Complementary affinity of bases
- But 2nd principle of thermodynamics is only for isolated systems
- Difficult generalization of chemical potentials for open systems, far from equilibrium
  - Yet : nodes of networks represent molecule types; differential equations are about concentrations of molecules. Is it licit?
- Rather :
  - An « order flux » (Dissipative structures, Prigogine)
  - An ubiquitious activity
  - Plastcity of macromolecules
  - Oscillation between enthalpic isomers
  - Temporaly stable complexes
- Contextualism
  - Any deviation from expected behaviour can be explained introducing new cofactors
- Very powerful model
  - Too much? Any network will fit any data set…

« Maintaining »
A technological story
(and nice pictures)

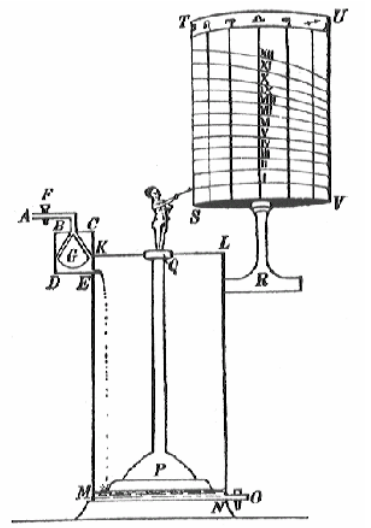

Clepsydre – Ktesibios d'Alexandrie (-270)

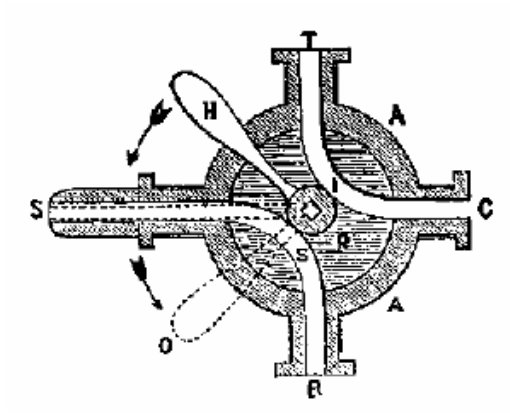

Papin, Soupape de régulation de pression, 1707

Al-Jazari, The book of knowledge of ingenious mechanical devices, 1315

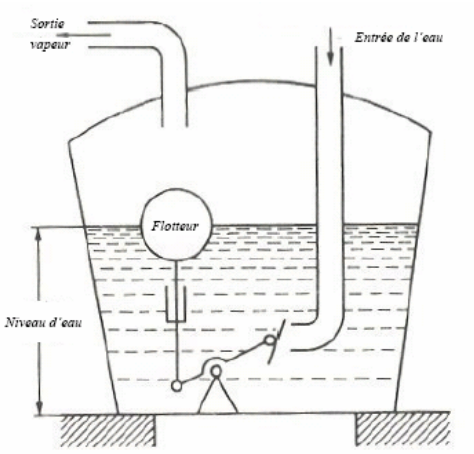

Polzunov, Machine à vapeur, 1769

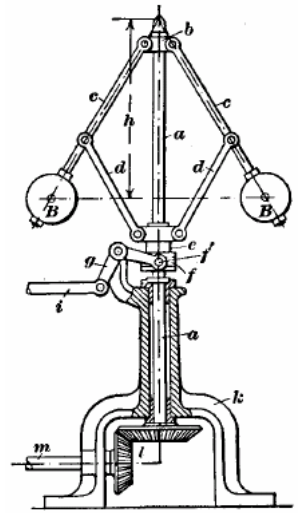

Watt, Régulation à gouverne centrifuge, 1788

Maintaining = controling?

- Feedback view of life:
  - « *Feedback is a central feature of life. The process of feedback governs how we grow, respond to stress and challenge, and regulate factors as body temperature, blood pressure, and cholesterol level. The mechanisms operate at every level, from the interaction of proteins in cells to the interaction of organisms in complex ecologies* » Hoagland and Dodson, The way life works, 1995
- Powerfull analysis of coupled dynamics
  - « *The term feedback is used to refer to a situation in which two (or more) dynamical systems are connected together such that each system influences the other and their dynamics are thus strongly coupled. (…) This makes reasoning based on cause and effect tricky and it is necessary to analyse the system as a whole.* » (Murray, 2003, Analysis and design of feedback systems)
- Powerfull mathematical tools
  - Control theory: frequency response, state models, stability, reachability, state feedback, output feedback, bode plots, block diagrams…
- An input/output paradigm
  - « Un système, aggrégation d'éléments interconnectés, est constitué (…) afin d'accomplir une tâche prédéfinie. Son état est affecté par plusieurs variables, les entrées. Le résultat de l'action des entrées est la réponse du système, qui peut être caractérisée par les variables de sortie. » (Arzelier)

Circuits, and dyn systems

- Positive and negative circuits ARE an important key of the understanding of network dynamics
  - Thomas, R. & Kaufman, M., "Multistationarity, the basis of cell differentiation and memory. I. Structural conditions of multistationnarity and other non trivial behavior II. Logical analysis of regulatory networks in terms of feedback circuits.", Chaos 11, (2001)
    - One case where biological intuition guides mathematical intuition !
    - Provides an understanding of: Stationarity/multistationarity, Stability, Differenciation
  - At the heart of systems theory and control theory
  - Works well with
    - clearly identified "inputs"
    - One way signal propagation
    - Monodimensional description of signal in R
- The origin : artefacts engineering
  - Leads to a question: who is the designer?
- Feedback : description, or explanation?
  - Remains a description if we do not know how it came this way...
- Dyn systems
  - Environment only comes in terms of "noise"
    - Otherwise you are only considering a "subnetwork"
  - How do you undertsand the emergence of a new observable?

Outline

- 1-Biology is (should be) about organization
- 2-The oblivion of organization: the multi-origin of the bio networks paradigm
- 3-A probabilistic view of organization: the integration/differenciation compromise
- 4-Remarks about probability theory. The question of relative probabilities

Tononi's model

- X isolated system made of n units, described by a multidimensional stochastic process
  - 1 unit: a group of neurons; activity = firing rate over few 100s of ms
  - Interactions given by a connectivity matrix con(X), « causally effective connections »
  - S : subset of X units; a partition of S: [A,B]_s

⇨ ***We then give maximum entropy to the outputs from*** A, *i.e. substitute its elements with independent noise sources of constrained maximum variance. Finally, we determine the entropy of the resulting responses of* B. *In this way we define the effective information from* A *to* B *as:* $EI(A \rightarrow B) = MI(A^{H^{max}} : B)$ *where* $MI(A:B) = H(A)+H(B)-H(AB)$ *stands for mutual information.*

⇨ •Effective information : $EI(A \rightleftharpoons B) = EI(A \rightarrow B) + EI(B \rightarrow A)$

⇨ •Minimum information bipartition: $MIB(S) = [A:B]_S$ telle que $\dfrac{EI(A \rightleftharpoons B)}{\min(H^{max}(A), H^{max}(B))}$ est minimum.

⇨ •Information integration measure: $\Phi(S) = EI(MIB(S))$

Effective information and information integration (2004)

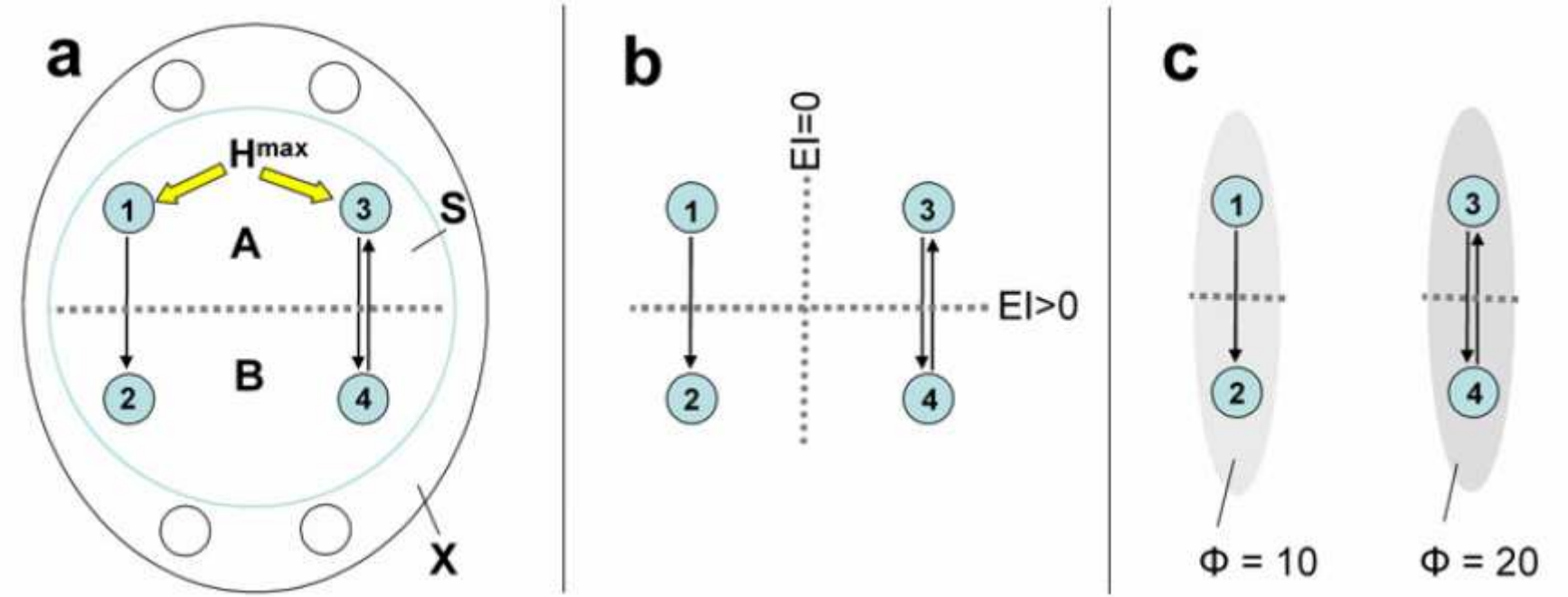

Remarks/questions

- The initial idea : intuitive
  - Complexity in between integration and differenciation
- Problems
  - « giving maximum entropy »
    - Signification for the system? Should be written EI(Ac -> B)
    - A case of differential analysis
  - Entropy given by covariance matrix ⟵ $H(X) = \frac{1}{2}\log(2\pi e)^n |K|$
    - True only for stationary isolated processes!
  - Notation MI(A,B)=H(A)+H(B)-H(AB) is a source of misunderstanding
    - It seems we can give max entropy to A, then look the effect on MI(A,B)
    - But actually H(A) is determined by a margin distribution
    - Mutual information between A and B needs joint distribution Fab(x,y)

$$f_A(x) = f_{AB}(x, +\infty)$$

    - Margin distribution can be calculated from joint distribution, but converse is false
- So :
  - How du justify a representation of neurons activity in terms of a stochastic process?
  - Is there an absolute sigma-algebra given for ever?
  - What's the effect of learning on the sigma-algebra and probability distribution? Does the distribution change during time?

Reminder: joint density, Vs margin densities

Tout d'abord, soit Y une **variable aléatoire** de **distribution** F: $F(y) = \Pr(Y \leq y)$. Si la dérivée de F, notée f, est définie, et que $\int_{-\infty}^{+\infty} f(y) = 1$, alors on appelle f la **densité de probabilité** de F. On peut de même définir les distributions jointes et densités jointes de deux variables aléatoires X et Y: $F_{xy}(x,y) = \Pr(X \leq x, Y \leq y)$ et $f(x,y) = \frac{\partial^2 F(x,y)}{\partial x \partial y}$ (avec $\iint f(x,y)dxdy = 1$).

On définit également les **distributions et densités marginales**, à partir des distributions et densités jointes: $F(x) = F_{xy}(X, \infty) = \int_{-\infty}^{+\infty} \int_{-\infty}^{x} f(\xi, y) d\xi dy$ et $f(x) = \int_{-\infty}^{+\infty} f_{xy}(x,y)dy$.

L'**entropie** d'une variable aléatoire X de densité f est donnée par: $H(X) = H(F_X) = \int f(x) \log f(x) dx$. Etant donné la **distribution conditionnelle**: $F_y(y|X \leq x = \frac{F_{xy}(x,y)}{F_x(x)}$, l'**information mutuelle** entre deux variables aléatoires de densité jointe $f(x,y)$ est donnée par: $I(X,Y) = \int f(x,y) \log \frac{f(x,y)}{f(x)f(y)} dxdy$.

Toutes ces définitions sont généralisables au cas de n variables, à partir de la donnée de la distribution jointe $F(x_1, \ldots, x_n) = \Pr(X_1 \leq x - 1, \ldots, X_n \leq x_n)$. Par exemple la distribution de quatre variables aléatoires nous donne la distribution marginale de deux d'entre elles: $F(x_1, x_3) = F(x_1, \infty, x_3, \infty)$.

Cas des **variables indépendantes**: $F_{xy}(x,y) = F_x(x)F_y(y)$, $f_y(y|x) = f_y(y)$. Et on peut intégrer indépendamment les densités:

$$\int_{x_1}^{x_2} \int_{y_1}^{y_2} f_{xy}(x,y)dxdy = (\int_{x_1}^{x_2} f_x(x)dx)(\int_{y_1}^{y_2} f_y(y)dy)$$

Atlan

- In « L'organsiation biologique et la théorie de l'information », 1972
- 2 possible opposite views of complexity
  - Eg: Von Foerster cube complex? Or very simple? Books in a library? Papers on my desk? Same papers scattered in the wind?
- Based on communication theory
  - Through communication, because of « noise » complexity can increase
    - An answer to Ashby's theorem

In progress

Outline

- 1-Biology is (should be) about organization
- 2-The oblivion of organization: the multi-origin of the bio networks paradigm
- 3-A probabilistic view of organization: the integration/differenciation compromise
- 4-Remarks about probability theory. The question of relative probabilities

Remarks about probability (1/3)

- Probability theory :
  - phenomena which under repeated experiments yield different outcomes
  - The notion of an experiment assumes a set of repeatable conditions that allow any number of identical repetitions
- Laplace's Classical Definition:
  - Provided all the outcomes are equally likely the probability of an event A is defined a-priori without actual experimentation
    - P(A)=(number of favorable outcomes for A)/(total number of possible outcomes) – Assuming equiprobability for any 2 possible events!
    - Equiprobability : a convention to be made explicit (Poincaré, La science et l'hypothèse, p.193)
    - Eg : Bertrand Paradox
- Relative Frequency Definition
  - P(A)=lim_n (nA/n)
- Kolmogorov axioms : all possibilities are given a priori
  - The totality of all ξ_i known a priori, constitutes a set Ω, the set of all experimental outcomes
- Measure versus probability
  - Measure theory is fine
    - This is about measuring volumes in mathematical spaces
  - But how do you relate it to "reality"?
  - When/how/why can you say that a the suitable mathematical representation of a system/process is a probability distribution?

Remarks about probability (2/3)

- « Levels of generality » (Poincaré, SH, p.196)
  - Depends on the number of possible cases
    - Level 1: 2 dice: 36 possibilities
    - Level 2: a point in a circle : proba for being in the incenter square
    - Level 3: probability for being a function that satisfies a given probability
      - Eg: guessing the most probable law from a finite number of observations
- Ignorance degrees
  - D1 Probability within mathematics
    - Eg: probability for 5th digit of a number in a log table = 9?Answer: 1/10
  - D2 Within Physics. We may know evolution law, but not initial state
    - Eg : statistical physics. Unknown initial speeds
  - D3 Ignorance of (initial condition+law)
    - Pb = <u>deducing causes from effects</u>
- Physics
  - Eg: what's most probable distibution of small planets on the zodiac today?
    - Kepler laws+unknown initial conditions: but we can say that today's distribution is <u>uniform</u>
    - Hyp: circular planar dynamic. Then proposition is equivalent to : average of sin(at+b) and cos(at+b) is 0
    - Initial distribution is given by unknown function φ
    - The result is true for any function φ, <u>if φ is continuous</u>
    - Case of a discrete distribution
      - Then the result might be false for a given improbable initial distribution
      - The « sufficient reason » principle goes against this improbable hypothesis
- Games
  - Similar situation to physics
  - Call $\varphi(\theta)$ the probability for a roulette wheel turning by angle θ
  - If φ is continuous we can proove that probability for getting « red » as a result is 1/2

Remarks about probability (3/3)

- Probability of causes
  - « the most important for scientific applications » (Poincaré, SH, p.207)
  - Eg: infering a law from observations
    - Genetics! Eg : DNA chips, biocomputing…
  - Always depends of a more or less explicit/justied convention
    - Eg: continuous function, continuous derivative…
      - « Without this belief (…) interpolation would be impossible; a law could not be deduced from a finite number of observations; science would not exist »
- Errors theory
  - Directly linked to the « probability of causes » problem
  - The problem: repeated measures give different results
  - Necessary conditions for Gauss law:
    - Big number of independent errors
    - Probability of a positive error=probability of a negative error (symmetry)
  - We can not be sure there are not systematic errors remaining
    - « This is a pratical rule for a subjective probability » (p.212)
    - « Some want to go further and claim not only that probable value is x, but also that probable error is y. This is absolutely illicit. That would be true if we were sure that systematic errors are eliminated, but we know absolutely nothing about this. »
    - Eg:imagine 2 observation series. Least square method may say that probable error is twice less on the 1st serie. We can say that « in probability » serie 1 is better, because its fortuitous error is less. But our knowledge about systematic error is absolute, so serie 2 can be better.

Poincaré's view : probability calculus always relies on arbitrary conventions/hypothesis

- In « La science et l'Hypothèse », p.213:

« Quoi qu'il en soit, il y a certains points qui semblent bien établis. Pour entreprendre un calcul quelconque de probabilité, et même pour que ce calcul ait un sens, il faut admettre, comme point de départ, une hypothèse ou une convention qui comporte toujours un certain degré d'arbitraire.

Dans le choix de cette convention, nous ne pouvons être guidés que par le principe de raison suffisante. Malheureusement, ce principe est bien vague et bien élastique et, dans l'examen rapide que nous venons de faire, nous l'avons vu prendre bien des formes différentes.

La forme sous laquelle nous l'avons rencontré le plus souvent, c'est la croyance à la continuité, croyance qu'il serait difficile de justifier par un raisonnement apodictique. mais sans laquelle toute science serait impossible.

Enfin, les problèmes où le calcul des probabilités peut être appliqué avec profit sont ceux où le résultat est indépendant de l'hypothèse faite au début, pourvu seulement que cette hypothèse satisfasse à la condition de continuité. »

Reinchenbach, *Les fondements logiques du calcul des probabilités*, 1937

Le premier caractère logique qu'il faut envisager ici est la constatation que l'énoncé probabilitaire concerne une *relation*. Nous ne parlons pas, par exemple, de la probabilité en général de trouver sur cette table un dé avec le « six » en haut; nous ne considérons cette probabilité que si nous *jetons* d'abord le dé; en d'autres termes la probabilité concerne une relation entre les deux événements : « lancement du dé » et « apparition du six ».

Le second caractère logique concerne la description des événements. Nous donnons cette description en précisant seulement la classe à laquelle l'événement appartient; et nous omettons tous les caractères individuels qui distinguent l'événement considéré des autres appartenant à la même classe. Dans notre exemple nous avons deux classes, A et B; A est la classe indiquée par la description « lancement du dé », B est la classe indiquée par la description « apparition du six ».

Le troisième caractère logique consiste en ce que l'énoncé ne concerne pas seulement les événements individuels en question, mais tous les événements des deux classes, sous la seule condition que ces événements soient donnés dans un certain ordre, qu'ils constituent donc une *suite*.

Reinchenbach axioms

Forme fonctionnelle.

α. *Normalisation :*

1. $P(A, A \vee B) = 1$
2. $P(A, B.\bar{B}) = 0$
3. $0 \leqq P(A, B)$

β. *Addition :*

$$P(A, B \vee C) = P(A, B) + P(A, C) - P(A, B.C)$$

γ. *Multiplication :*

$$P(A, B.C) = P(A, B) \cdot P(A.B, C)$$

The irreversibility controversy in stat physics

- How does stat phy deal with probability and its intepretation?
- Boltzmann, the « stobzhlansatz » hypothesis (1872)
    - Irreversibility paradox (Zermelo) : deterministic reversible newtonian mechanics; versus independence of speeds of 2 molecules before collision? (
- Still a controversy
  - Ruelle/Lebowitz/Bricmont/Boltzmann
    - Description = most probable succession of microstates
    - Requires:
      - An explicit distinction of micro and macro level
      - Attributing an important role to initial conditions (special initial state of the universe…)
  - Versus Prigogine
    - Gibbs ensembles; intrinsic probability; no more trajectories; description is about succession of most probable microstates
    - « irreversibility is true a any level, or at no level: it can not emerge let's say from nothing, only going from level to an other » (Prigogine and Stengers, 1984)
    - Irreversibility should be true for any initial conddition, whatever the scale
- From my point of view…
  - It is about the relation between the topological description, and the ergodic description
  - 2 partially compatible views

Topology/measure/probability

- How does ergodic theory deal with probability and its interpretation?
- « measure preserving »
  - No more prior probability problem
  - Role of conjugacy
    - Eg: logictic versus (?)
- Dynamic entropy
  - Focuses more on the process than on states
  - Is about : how the dynamic operates on states
- Topology versus measure
  - Topological entropy realizes the sup of measure entropies (variational principle)
- Chaotic behavior (topology) of trajectories versus predictable statistic behavior (measure)

Rough idea

Chains of conditional probability

Ergodic, stat phy : lim n-> infty

Closure

Biology?

?

Thank you !

Conditional proba, Bayes theorem

- Conditional probability
  - $P(A|B)=P(AB)/P(B)$
  - Ex:dice experiment. A="outcome is 2";B ="outcome is even".
  - The statement that B has occured makes the odds for "outcome is 2" greater than without information
  - Conditional probability expresses the probability of a complicated event in terms of "simpler" related events
    - However, event $(A|B)$ is defined a priori: it is a member of the tribe we are working with
- Independence:
  - A and B are said to be independent events, if $P(AB)=P(A).P(B)$
    - Justification?
  - Notice that this definition is a probabilistic statement, not a set theoretic notion such as mutually exclusiveness
- Bayes theorem
  - $P(AB)=P(A|B).P(B)$ and $P(AB)=P(B|A).P(A)$
  - Implies : $P(A|B) = P(B|A).P(A)/P(B)$
  - Interpretation:
    - $P(A)$ represents the <u>a-priori</u> probability of the event A.
    - Suppose B has occurred, and assume that A and B are not independent.
    - The new information ("B has occurred") gives out the <u>a-posteriori</u> probability of A given B.
    - We can also view the event B as new knowledge obtained from a fresh experiment. We know something about A as $P(A)$. The new information is available in terms of B. The new information should be used to improve our knowledge/understanding of A. Bayes' theorem gives the exact mechanism for incorporating such new information.

Markov chains as a general expression of conditional probability

- Xk: state value at time k $\mathcal{P}(x^{k+1} = j | x^k = i) = M^k_{ij}.$
- Markovian law

$$\mathcal{P}(x^{k+1} = j | x^k = i, x^{k-1} = i_{k-1}, \ldots, x^0 = i_0) = M^k_{ij}.$$

- Stochastic matrix
  - Sum line =1
  - The product of 2 stochastic matrices is a stochastic matrix
- Kolmogorov equation: $p^{k+1} := \mathcal{P}(x^{k+1} | p^k) = \sum_i p^k_i M^k_{i,\cdot} = p^k M^k,$
- Therefore:

$$\mathcal{P}(x^{k+1} | p^0) = p^0 M^0 M^1 \ldots M^k.$$

Intrinsic probability: Prigogine's proposition

- Central limit theorem violation
  - Prigogine p.196
  - Fluctuation can reach the macroscopic scale
  - It is the case for bimodal distributions
  - Reflects the emergence of a coherent behaviour in the system
  - « Such a coherence must be attributed to a transition leading from a unique state to a state charcterized by 2 probability maxima »
    - This is a « stochastic » bifurcation

Contour detection : a probabilistic model

- REF : Nadja Schinkel, Klaus R. Pawelzik, and Udo A. Ernst, Robust integration and detection of noisy contours in a probabilistic neural model, Neurocomputing 65-66C, 211-217 (2005)

- Approach 1 : Neural network models
  - Intracortical horizontal connections
  - Afferent input is added to the lateral feedback

- Approach 2: Probabilistic models – Fits better to experiments
  - Evaluation of edge link probabilities against the evidence for the presence of edges
  - Evidence for oriented edges is bound multiplicatively to edge link probabilities
  - Higher performances
  - More robust against noise (synaptic noise) and uncertain information (for any stimulus

What conditional probability could not be (Hajek, Synthese, 2003)

- « Kolmogorov's axiomatization includes the familiar ratio formula for conditional probability $P(A|B)=P(A.B)/P(B)$ $(P(B)>0)$
- This is the « ratio analysis » of conditional probability. Often referred as the definition of conditional probability. But it's an analysis.
- « not even an adequate analysis of the concept »
- Conditional probability should be taken as the primitive notion
  - And unconditional probability should be analysed in terms of it
- Notation:P(A,given B), B=the condition
- The ratio analysis is mute whenever the condition has probability 0
  - Yet conditional probability may well be defined in such cases
  - But not not a problem from the conditional entropy point of view since X.Log X is continuous in 0.

Definition : sigma-algebra

Definition 2.1. *Suppose X is a set equipped with a collection $\mathcal{M}$ of subsets $E \subset X$ such that $\mathcal{M}$ is closed under countable unions and complements; that is, whenever $E \in \mathcal{M}$, so is $X \setminus E$, and whenever we have a sequence E_j of sets in $\mathcal{M}$, then $\cup_{j=1}^{\infty} E_j$ is in $\mathcal{M}$. Then $\mathcal{M}$ is said to be a* **sigma-algebra** *on X.*

- Notes : Probability and pi digits, Probability as a quantification of logic?, Ref : Papoulis chapitres 1, 3, 7
- History of Weak and Strong law of larger numbers
  - Bernouilly, Ars Conjectandi, 1713
  - Poisson, generalization of Bernouilli Theorem, ~1800
  - Tchebychev, 1866
  - Markov, extension to dependent random variables
  - Borel, theorem : strong law of large numbers, 1909
  - Kolmogorov, Necessary and sufficient condition for mutually independent random variables, 1926

Log form of entropy

- Shannon 1948 : « parameters of engineering importance such as time, bandwidth, number of relays » tend to vary linearly with the logarithm of the number of possibilities », « adding one relay to a group doubles the number of possible states of the relays », « two punched cards should have twice the capacity of one for information storage »

1. H est une fonction continue des p_i.
2. Si tous les p_i sont égaux, $p_i = 1/n$, alors H est une fonction monotone croissante de n, car dans le cas d'événements équiprobables, il y a plus de choix, ou plus d'incertitude, lorsque le nombre d'événements possibles augmente.
3. Un choix peut-être réparti en sous-choix et dans ce cas l'entropie "totale" est la somme pondérée des "sous-entropies". Par exemple

$$H(1/2, 1/3, 1/6) = H(1/2, 1/2) + 1/2H(2/3, 1/3).$$

Plus formellement $H(\mathcal{P} \vee \mathcal{Q}) = H(\mathcal{P}) + H(\mathcal{Q}/\mathcal{P})$ où $H(\mathcal{P}/\mathcal{Q})$ est définie comme dans l'équation 4.4.1.

Théorème 4.5.1. *La fonction H satisfaisant les conditions (1) à (3) ci-dessus est de la forme*

$$H = -K \sum_{i=1}^{n} p_i \log p_i.$$