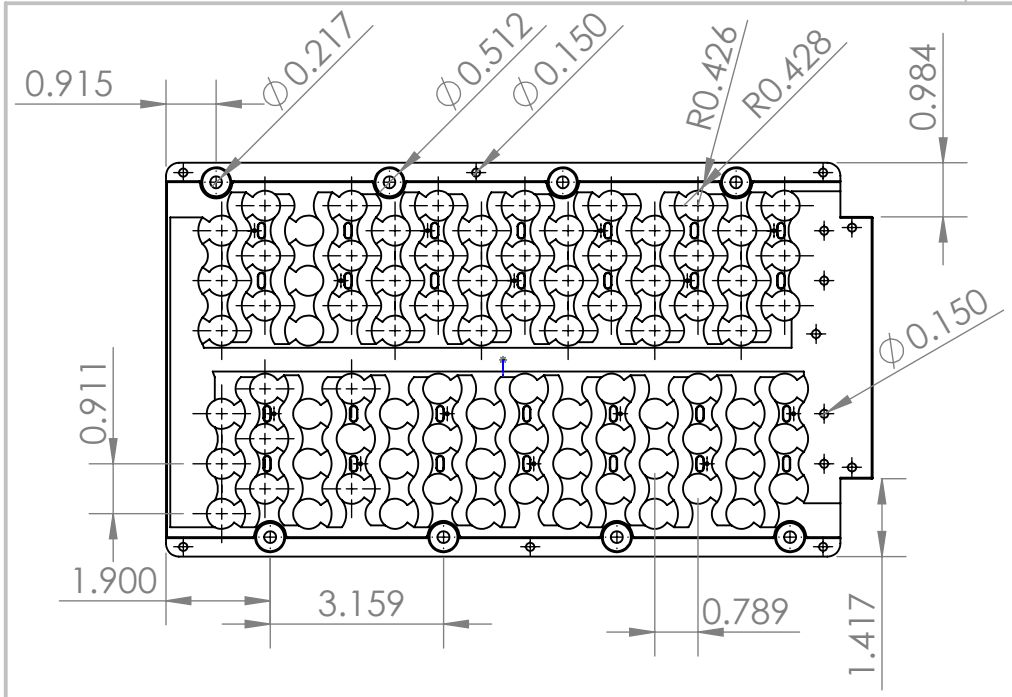

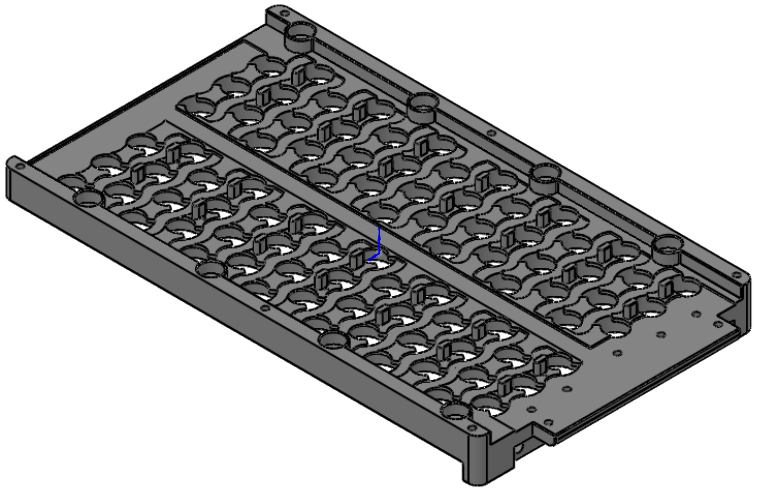

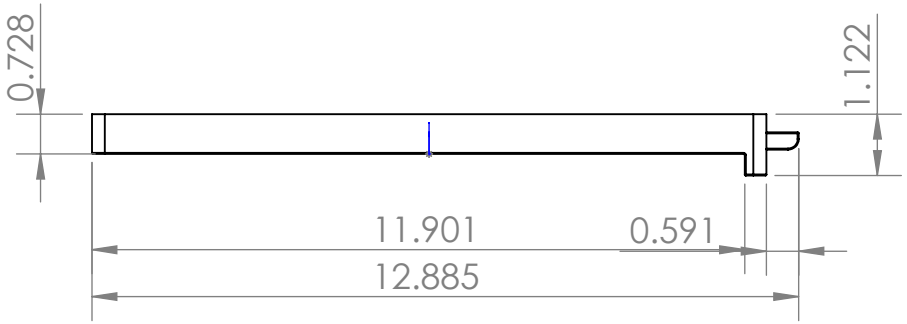

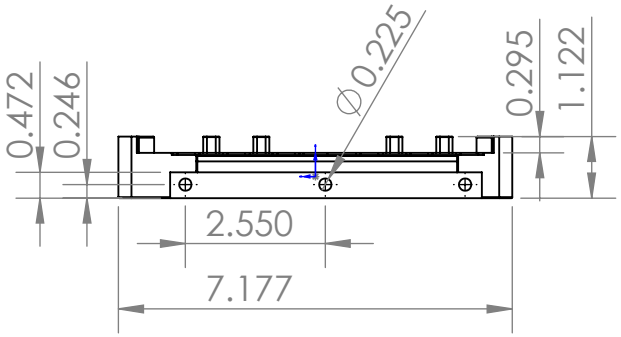

	NAME	DATE
DRAWN	Matt H.	5/9/25
CHECKED		
ENG APPR.		
MFG APPR.		
Q.A.		
COMMENTS:		

TITLE:

Top Cell Holder

SIZE	DWG. NO.	REV
A		

SCALE: 1:3.5 | WEIGHT: | SHEET 1 OF 1

DO NOT SCALE DRAWING

SOLIDWORKS Educational Product. For Instructional Use Only.