PLAN HISTORY

DATE	REV. NO	PROJ. NO.	DESCRIPTION	WEIGHT(Kg)				TOTAL PAGES	DWN	CHK	APP
				REV	ADD	CAN	SUM				
2025.06.18	0	D2581/2	D2581/2 5LP250V 호선용으로 출도함(2SET)						김갑진	-	임우택
2025.09.26		D2602	D2602 5LP250V 호선용으로 출도함						진호련	김갑진	인진태
2026.02.26		D2603	D2603 5LP250V 호선용으로 출도함						진호련	김갑진	인진태

*** 총중량(KG/SHIP) :** A-SET : 2,020kg B-SET : 1,579kg

NOTE

1. 의문사항은 임의 제작치 마시고 설계부로 문의 후 작업 바랍니다.
2. 제작 수량 주의바랍니다.(도면 및 중량 LIST 확인 후 작업바랍니다.)
3. 제작에 사용된 자재에 대한 MILL SHEET 제출 바랍니다.(국산, KS 규격 사용)
4. OPEN GRAT'G 과 설치재(BOLT, NUT, WASHER)는 제작 SCOPE가 아닙니다.
5. PAINT : FRAME - BCX-18
   H/RAIL - BCX-1
6. LOOSE품(SHIM PLATE) 고박 입고바랍니다.

Designation and Activity	Procedure according to DNV	Procedure Drawing or Spec. BCAG	Procedure according to Design Code	Code, standard or spec. reference Acceptance Criteria
Non Destructive Examination	NA	AWS D1.1	AWS D1.1	Welding Seams 20%MT or PT Lifting Lug Welds 100%PT or MT

CAUTION

THIS DRAWING OR DOCUMENT IS THE PROPERTY OF SUNBO INDUSTRIES CO., LTD.
AND IT MUST NOT BE PARTIALLY OR WHOLLY COPIED OR USED FOR ANY OTHER PURPOSE
WITHOUT PRIOR WRITTEN PERMISSION OF SUNBO INDUSTRIES CO., LTD.

도면배포처		SEC NO.	MACH. OUTFITTING DESIGN DEP'T DESIGN 8 TEAM	SHIP TYPE	174K LNG
구매부	▼				
생산부	▼	TEL. NO.	SHIP NO.	SHIP NAME	
QC	▼	051-260-5638	D2581/2/2602/2603 5LP250V		
		DATE 2025.09.26	APPROVED 인진태	NAME OF DRAWING	사외제작철의장품 FOR HP COMPRESSOR PACKAGE (5LP250V)
			CHECKED 김갑진		
			DRAWN 진호련	DRAWING NO.	SCALE
				SB - 0	NONE
				CLASS	UNIT / CONSOLIDATED
				0	mm
TOTAL	3				

SUNBO UNITECH CO., LTD

도면 및 중량 LIST

DWG NO	PART NO	A SET 제작수량	B SET 제작수량	중량(kg)	비고
125.619.980	BRIDGE MOTOR SIDE	1EA	1EA	399	
125.619.981	BRIDGE PUMP SIDE	1EA	1EA	385	
125.619.982	BRIDGE COMP/MOTOR	2EA	2EA	564	
125.622.368	BALCONY M2	1EA	-	371	A SET만 제작
125.619.983	STIFFNER	1EA	1EA	155	
125.623.891	BRIDGE OVER PIPE	2EA	2EA	76	
125.619.994	LIFTING DEVICE M3	1EA	-	70	A SET만 제작
A SET 중량				2,020	
B SET 중량				1,579	

TYPICAL CONNCTION DETAIL

EQUAL DEPTH BEAM

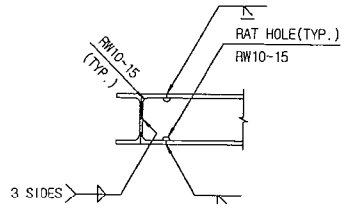

BEAM TO ANGLE

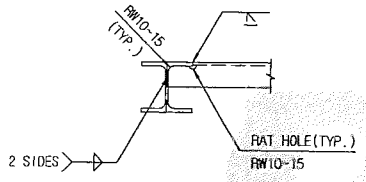

ANGLE TO ANGLE

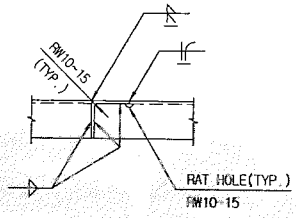

CHANNEL TO CHANNEL

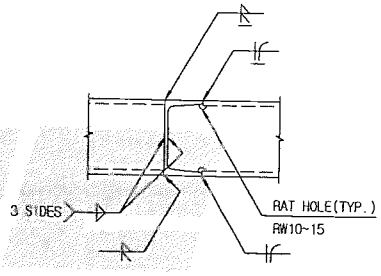

CHANNEL TO ANGLE

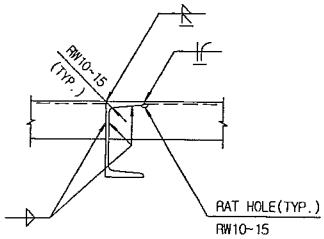

CONER JOINT DETAIL

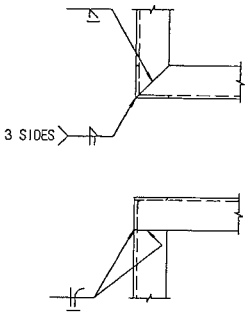

STIFF. PLATE DETAIL

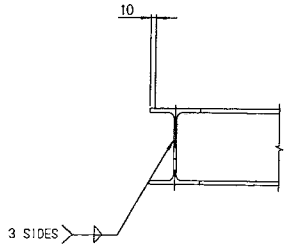

6. Farbaufbau/ painting system

Burckhardt Compression Farbaufbau auf Kohlenstoffstahl, Eisen- und Ni-resist Guss für Betriebstemperaturen ≤ *+205°C* inklusive kryogenischer Anwendungen.

Burckhardt Compression painting system for carbon steel, cast-iron and Ni-resist cast with operating temperatures ≤ +205°C including cryogenic service.

1. und 2. Schicht
1st and 2nd layer

2-K Alkyliertes Amin Epoxy

2-Pack Alkylated Amine Epoxy
INTERBOND 2340UPC
TDO 2072271

Farbton: Produkt standard grau
Colour shade: *Product standard grey*

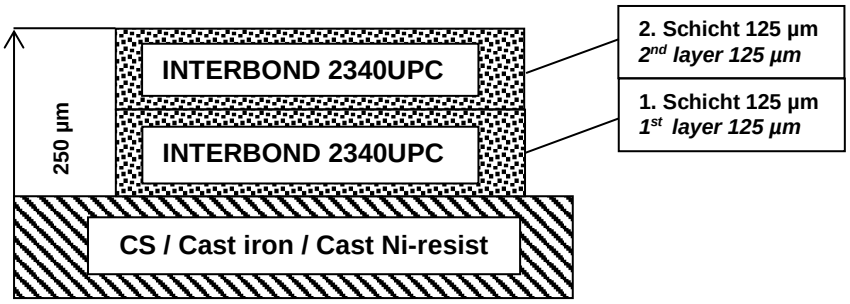

Hinweis:
2340 UPC ist nur in 3 Produkte Standard Farbtönen erhältlich: Grau, Pink, Olive. Wie bei allen Epoxiden kann es zu Verfärbung und zu Verkreidung kommen, was die Funktionalität jedoch nicht beeinträchtigt, vorausgesetzt die empfohlenen Temperaturlimiten werden nicht überschritten.

Remark:
2340UPC is only available in 3 standard colour shades Grey, Pink, Olive. In common with all epoxies, discoloration and chalking may occur. This will not have influence on the functionality provided recommended temperature limits are not exceeded.

Anwendungsempfehlungen und Produktedetails entnehmen Sie bitte dem technischen Merkblatt

For application recommendations and product details please refer to the product data sheet

6. Farbaufbau/ *Coating system*

Burckhardt Compression Farbaufbau
auf Kohlenstoffstahl, Grau- und Sphäroguss
für Betriebstemperaturen ≤ +120C°

Burckhardt Compression painting system
for carbon steel, cast-iron and nodular cast
for service temperatures ≤ +120C°

Grundierung / *Primer*
2-K Epoxy – Zinkstaubgrundierung

2-Pack Epoxy – zinc rich primer
INTERZINC 52
TDO 2039235

Zwischenbeschichtung / *Interlayer*
2-K Epoxy / Polyamid Glimmerfarbe

2-Pack Epoxy / Polyamide Mio paint
INTERGARD 475 HS
TDO 2039236

Decklack / *Top coat*
2-K Polyurethan - Acrylat

2-Pack Acrylic - Polyurethane
INTERTHANE 990
TDO 2039237

FINAL COLOR : RAL1018(YELLOW)

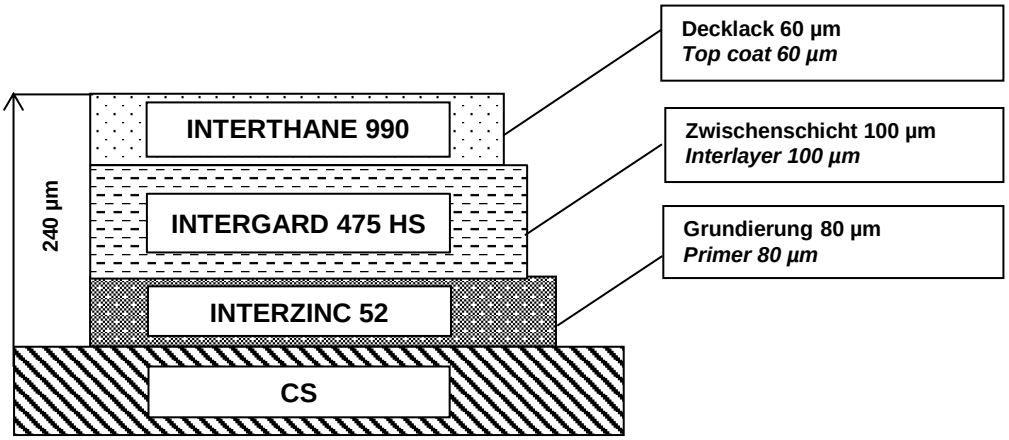

Produktspezifische Details entnehmen Sie
bitte den technischen Merkblättern (TDO)

For product details please refer to
manufacturer data sheets (TDO)

Drawing 1-125.619.980

VIEW A

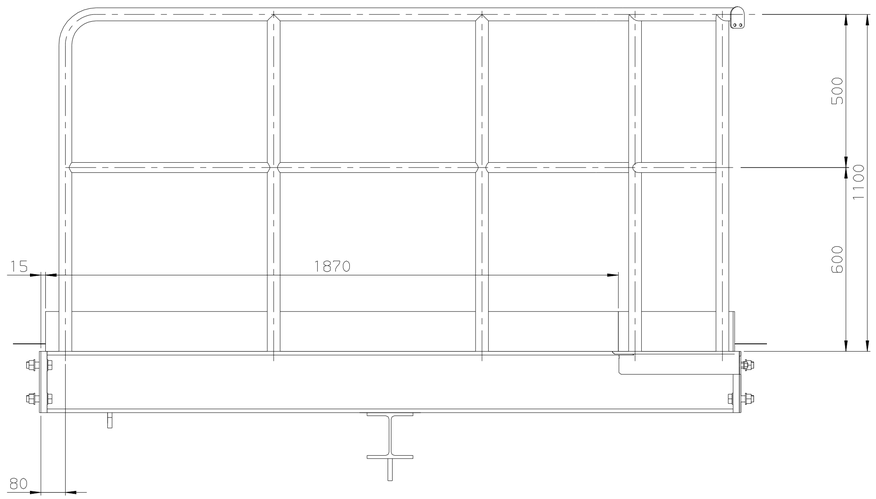

VIEW B

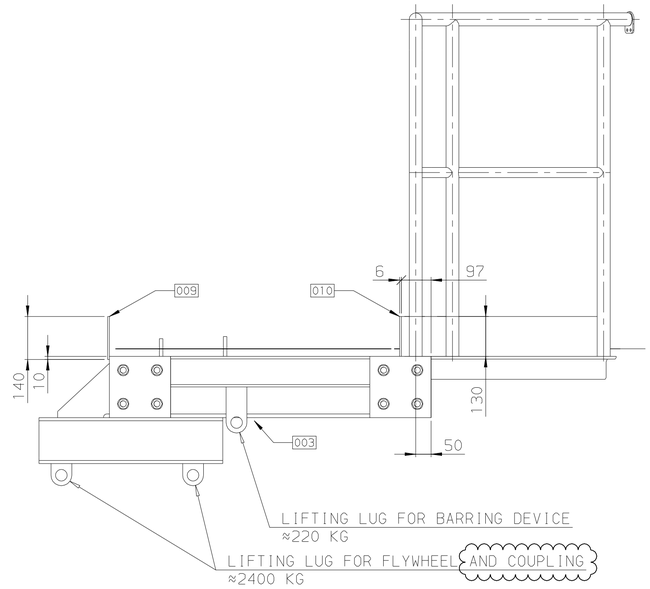

VIEW C

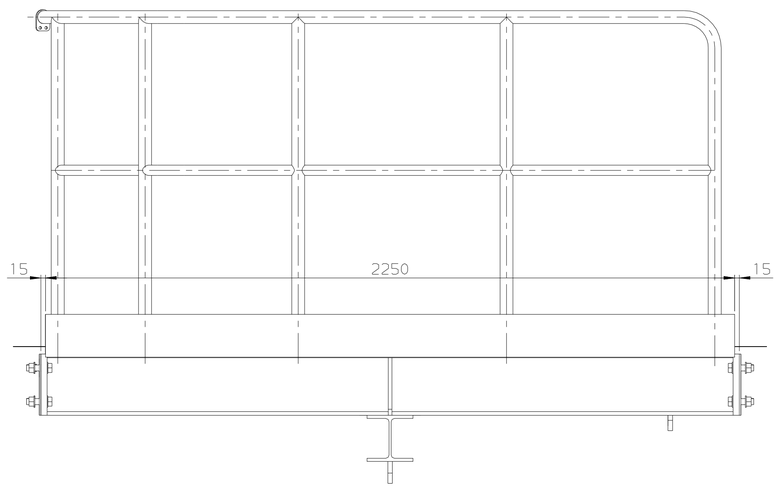

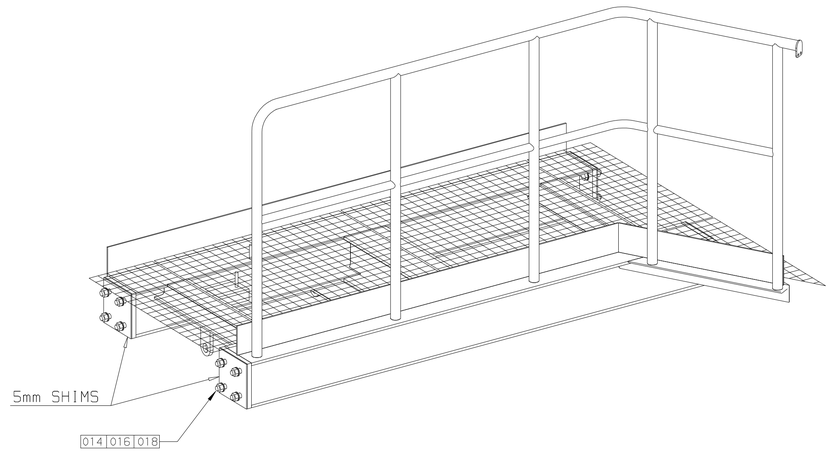

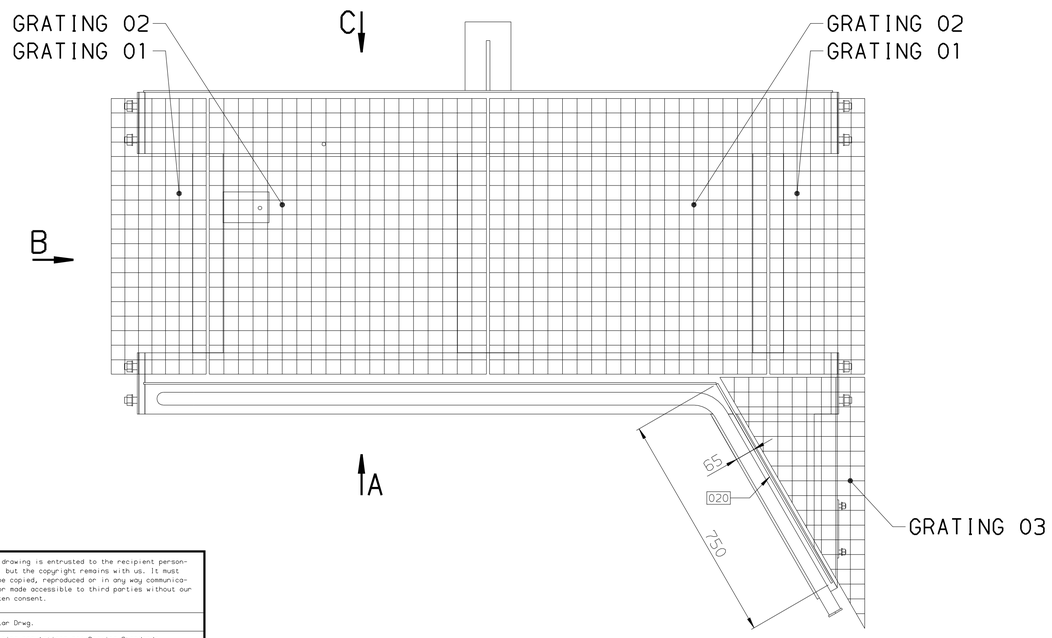

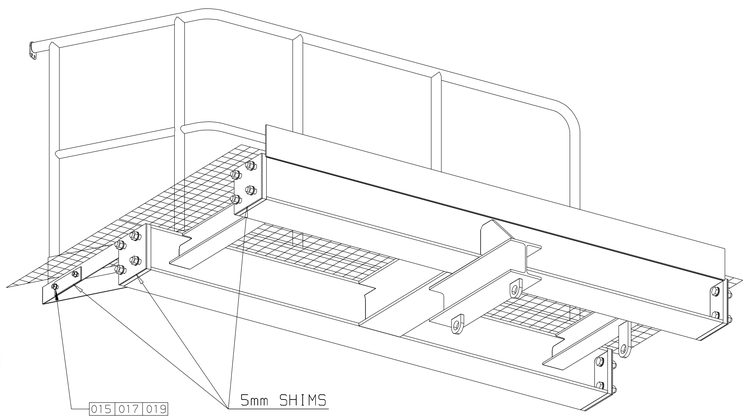

Execution Code Number	Pos.No. Code	Designation / Material and Remarks	Source of Supply / Approx. mass kg/pc	Mod. Letter
Number OFF				
5.5m	001	BEAM H-200x200	/	/ /
		SS400 KS D3503	267	/ /
1.7m	002	BEAM H-100x100	/	/ /
		SS400 KS D3503	25	/ /
/	003	/	/	/ /
		/ /	/	/ /
4	004	PLATE 200x200x20	/	/ /
		SS400 /	6	/ /
1	005	PLATE 265x188x12	/	/ /
		SS400 /	3	/ /
/	006	/	/	/ /
		/ /	/	/ /
1	007	PLATE 70x50x5	/	/ /
		SS400 /	1	/ /
1	008	PLATE 150x68x15	/	/ /
		SS400 /	1	/ /
1	009	FOOT PLATE 2250x140x6	/	/ /
		SS400 /	15	/ /
1	010	FOOT PLATE 1870x130x6	/	/ /
		SS400 /	11	/ /
8.5m	011	PIPE 1 1/4" (SCHED.10)	/	/ /
		A106 GR B ASME B36.10M	22	/ /
2.7m	012	PIPE 1" (SCHED.10)	/	/ /
		A106 GR B ASME B36.10M	7	/ /
2.4m²	013	GRATING (THK 25)	/	/ /
		/ /	/	/ /
16	014	HEX. HEAD BOLT W/SHANK M20x70/46	/	/ /
		8.8 DIN EN ISO 4014	/	/ /
2	015	HEX. HEAD BOLT M12x40	/	/ /
		8.8 DIN EN ISO 4017	/	/ /
16	016	HEX. NUT M20	/	/ /
		8 DIN EN ISO 4032	/	/ /
2	017	HEX. NUT M12	/	/ /
		8 DIN EN ISO 4032	/	/ /
32	018	WASHER (M20)	/	/ /
		/ ISO 7089-20-200 HV	/	/ /
4	019	WASHER (M12)	/	/ /
		/ ISO 7089-12-200 HV	/	/ /
1	020	FOOT PLATE 750x130x6	/	/ /
		SS400 /	5	/ /
1.5m	021	BEAM L-75x75x9	/	/ /
		SS400 KS D3503	13	/ /
2	022	PLATE 72x68x15	/	/ /
		SS400 /	1	/ /
0.6m	023	BEAM H-150x150	/	/ /
		SS400 KS D3503	19	/ /
0.2m	024	BEAM CH-100x50	/	/ /
		SS400 KS D3503	2	/ /
2	025	HEX. HEAD BOLT W/SHANK M12x70/30	/	/ /
		8.8 DIN EN ISO 4014	/	/ /
4	026	SHIMS 200x200x3	/	/ /
		SS400 /	/	/ /
8	027	SHIMS 200x200x1	/	/ /
		SS400 /	/	/ /
1	028	SHIMS 190x60x3	/	/ /
		SS400 /	/	/ /
2	029	SHIMS 190x60x1	/	/ /
		SS400 /	/	/ /
APPROX WEIGHT			≈ 399 Kg	

NOTE:

1) ALL LISTE MATERIAL ARE WITHOUT ALLOWANCE.

Burckhardt Compression

FOR APPROVAL

Documentation shall be deemed to be approved unless commented and/or rejected within 14 days

Modifications	Name	Date	Name	Date	Name	Date	Name	Date
e	TONELLI_M	02-04-2024						
a	TONELLI_M	09-03-2023	TONELLI_M	25-05-2023	TONELLI_M	30-08-2023	TONELLI_M	26-01-2024

Sep.parts list | Design group

Replaced by | Subst. for | Orig. scale 1:10

5LP250V-5A

L-0184
ASME

STEEL STRUCTURE
BRIDGE MOTOR SIDE
LABY-GI® - NON-LUBE COMP.
ITEM NO.: C-001

Drawn: 14-04-2022 TONELLI_M
Verified: 05-04-2024 SABOGAL_A
Standards conform:

CAD-Drawing | Part-No. | Bar - Code

Burckhardt Compression | E | 1-125.619.980 | 1 - 2 e

This drawing is entrusted to the recipient personally, but the copyright remains with us. It must not be copied, reproduced or in any way communicated or made accessible to third parties without our written consent.

Similar Drwg.

Machining regulations see Drawing Standards.

Drawing 1-125.619.980

FRAME

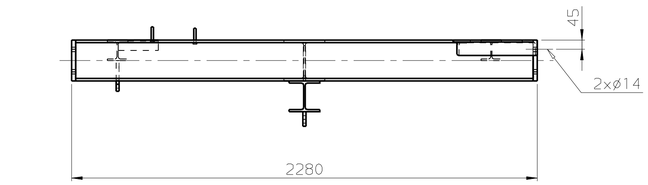

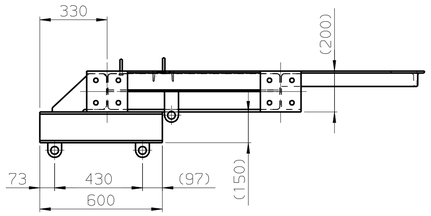

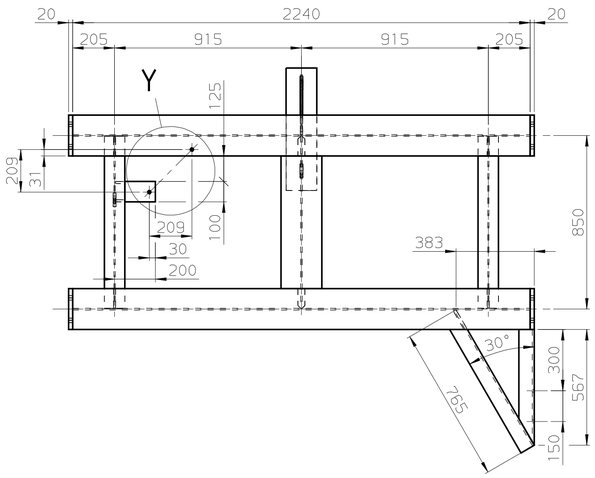

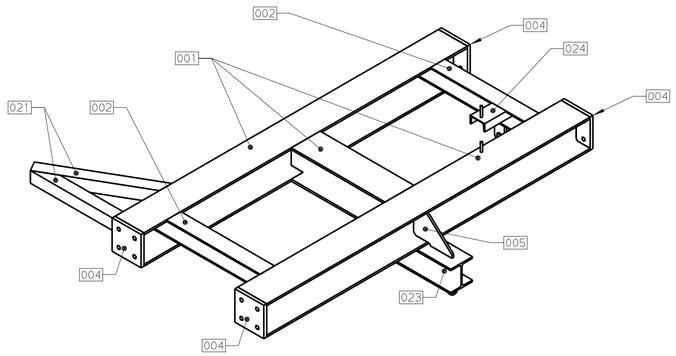

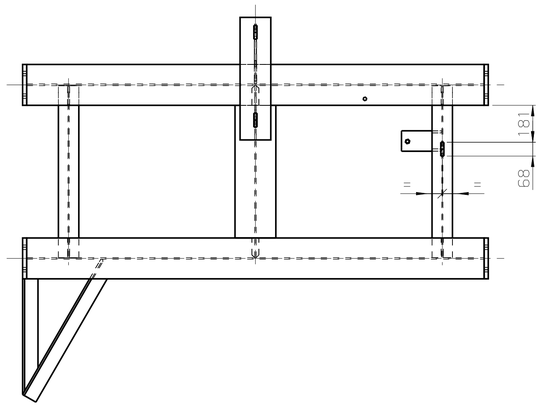

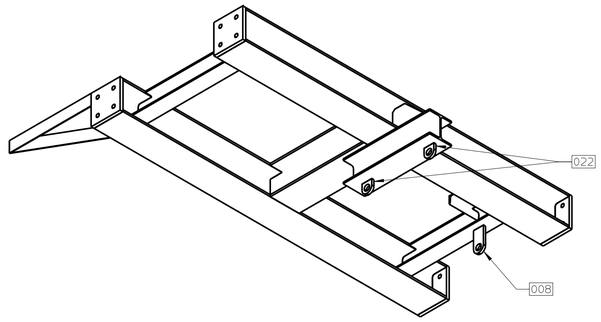

DETAIL Y

(SCALE 1:2)

SCREW MUST BE WELDED FROM BOTTOM

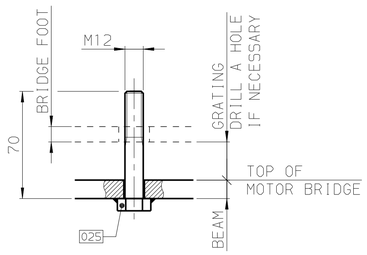

RAILING

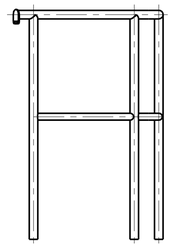

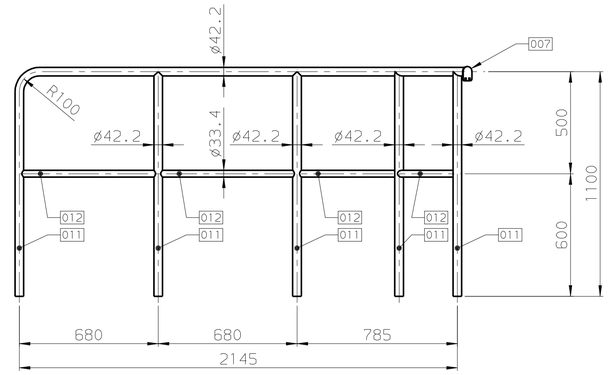

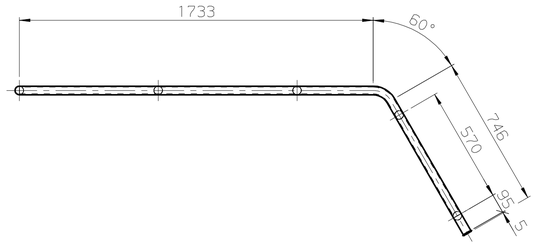

POS 004

THICKNESS 20mm
(SCALE 1:10)

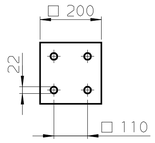

POS 005

THICKNESS 12mm
(SCALE 1:10)

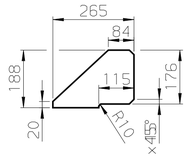

POS 007

THICKNESS 5mm
(SCALE 1:5)

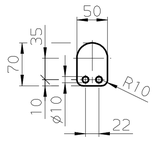

POS 008

THICKNESS 15mm
(SCALE 1:5)

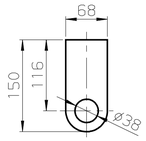

POS 022

THICKNESS 15mm
(SCALE 1:5)

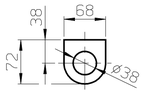

GRATING 01 (QTY 2) 013

THICKNESS 25mm

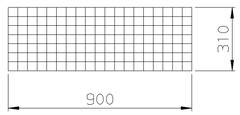

GRATING 02 (QTY 2) 013

THICKNESS 25mm

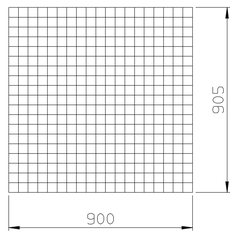

SHIMS POS 026/027

(SCALE 1:10)

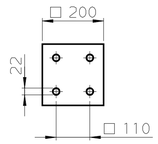

SET FOR ONE INTERFACE THICKNESS

1 x 3mm
2 x 1mm

SHIMS POS 028/029

(SCALE 1:10)

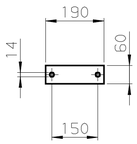

SET FOR ONE INTERFACE THICKNESS

1 x 3mm
2 x 1mm

GRATING 03 013

THICKNESS 25mm

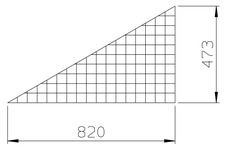

Modifications											
	e	TONELLI_M	02-04-2024								
	a	TONELLI_M	09-03-2023	b	TONELLI_M	25-05-2023	c	TONELLI_M	30-08-2023	d	TONELLI_M	26-01-2024
		Name	Date		Name	Date		Name	Date		Name	Date

Sep.parts list	Design group	
Replaced by	Subst. for	Orig. scale 1:15 ,

SLP250V-5A	STEEL STRUCTURE BRIDGE MOTOR SIDE	Drawn: 19-04-2022 TONELLI_M
L-0184 ASME	LABY-GI® - NON-LUBE COMP. ITEM NO.: C-001	Verified: 05-04-2024 SABOGAL_A
		Standards conform:
CAD-Drawing	Part-No. / Bar - Code	
Burckhardt Compression	E	1-125.619.980	2 - 2 e

This drawing is entrusted to the recipient personally, but the copyright remains with us. It must not be copied, reproduced or in any way communicated or made accessible to third parties without our written consent.

Similar Drwg.

Machining regulations see Drawing Standards.

Drawing 1-125.619.981

VIEW A

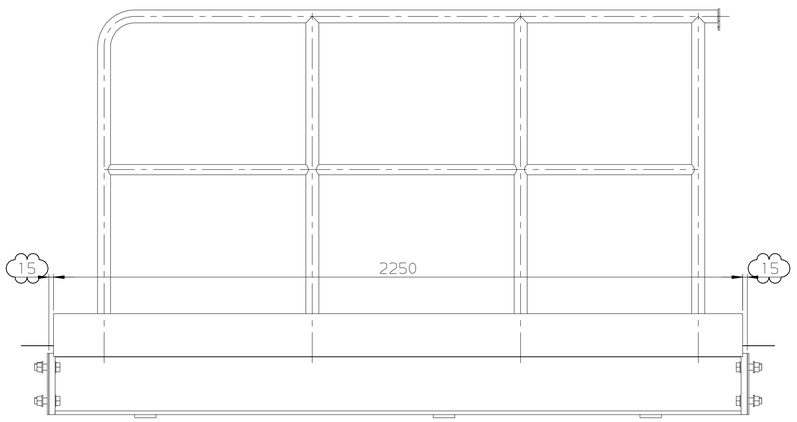

VIEW B

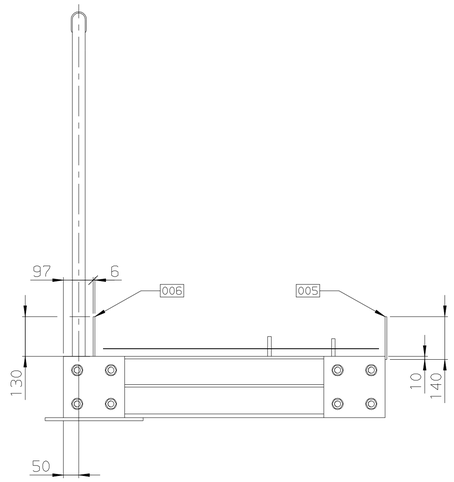

VIEW C

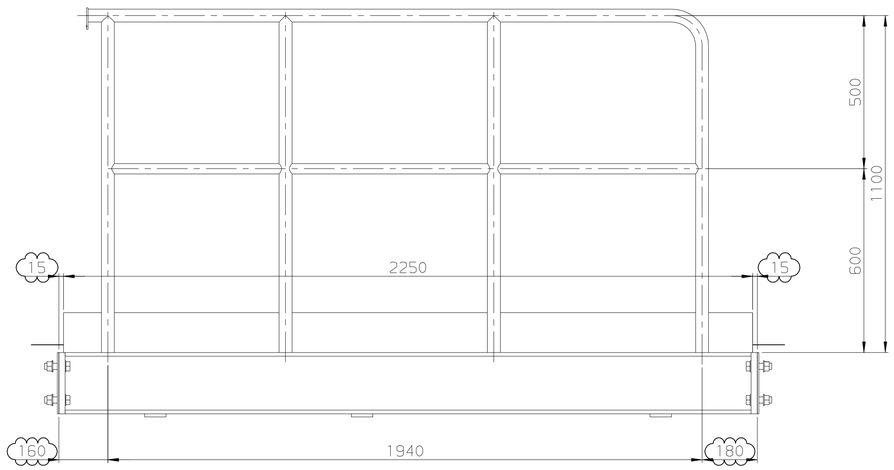

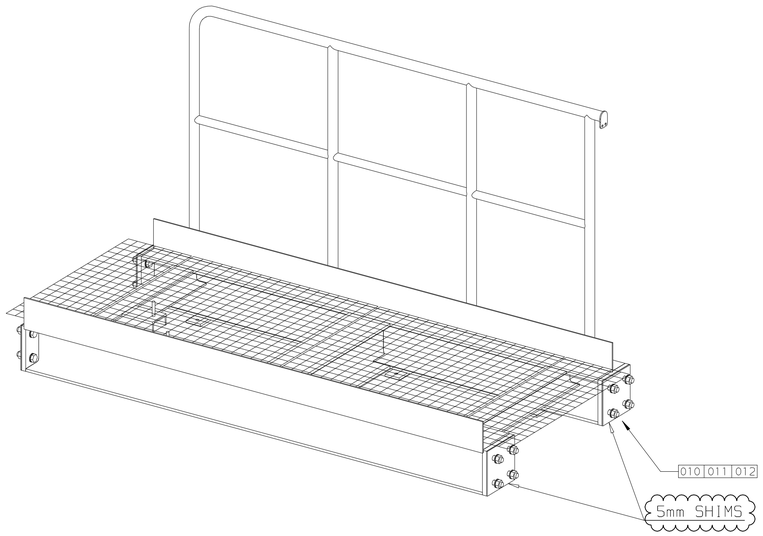

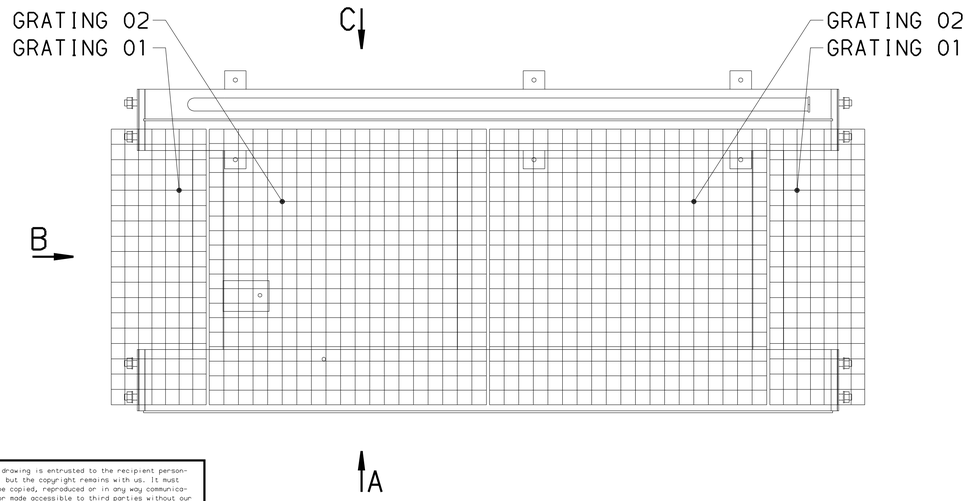

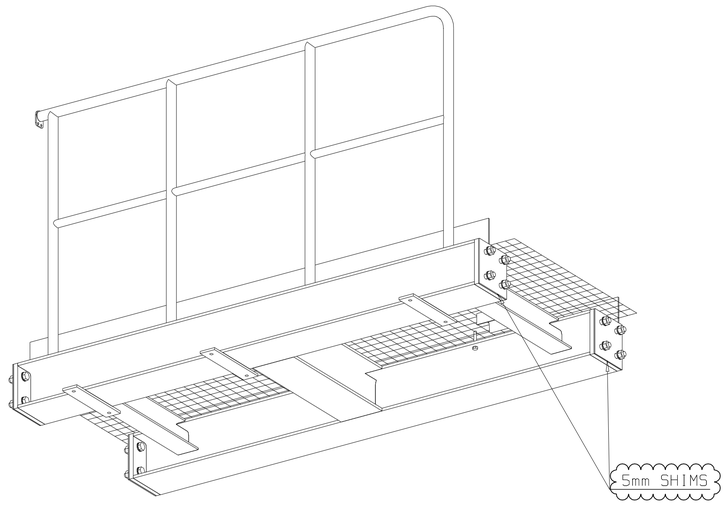

Execution Code Number ---

Number	OFF	Pos.No. Code	Designation / Material and Remarks	Source of Supply / Approx. mass kg/pc	Mod. Letter	
5.5m		001	BEAM H-200x200	/	/	/
			SS400 KS D3503	267	/	/
2m		002	BEAM H-100x100	/	/	/
			SS400 KS D3503	29	/	/
4		003	PLATE 200x200x20	/	/	/
			SS400 /	6	/	/
3		004	PLATE 320x70x10	/	/	/
			SS400 /	1.5	/	/
1		005	FOOT PLATE 2250x140x6	/	/	/
			SS400 /	15	/	/
1		006	FOOT PLATE 2250x130x6	/	/	/
			SS400 /	14	/	/
6.5m		007	PIPE 1 1/4" (SCHED.10)	/	/	/
			A106 GR B ASME B36.10M	22	/	/
2.0m		008	PIPE 1" (SCHED.10)	/	/	/
			A106 GR B ASME B36.10M	7	/	/
2.2m²		009	GRATING (THK 25)	/	/	/
			/ /	/	/	/
16		010	HEX. HEAD BOLT W/SHANK M20x70/46	/	/	/
			8.8 DIN EN ISO 4014	/	/	/
16		011	HEX. NUT M20	/	/	/
			8 DIN EN ISO 4032	/	/	/
32		012	WASHER (M20)	/	/	/
			/ ISO 7089-20-200 HV	/	/	/
1		013	PLATE 70x50x5	/	/	/
			SS400 /	/	/	/
0.2m		014	BEAM CH-100x50	/	/	/
			SS400 KS D3503	2	/	/
2		015	HEX. HEAD BOLT W/SHANK M12x70/30	/	/	/
			8.8 DIN EN ISO 4014	/	/	/
4		016	SHIMS 200x200x3	/	/	/
			SS400 /	/	/	/
8		017	SHIMS 200x200x1	/	/	/
			SS400 /	/	/	/
APPROX WEIGHT				≈ 385 Kg		

NOTE:

1) ALL LISTE MATERIAL ARE WITHOUT ALLOWANCE.

Burckhardt Compression

FOR APPROVAL

Documentation shall be deemed to be approved unless commented and/or rejected within 14 days

Mod. Explanations	Name	Date	Name	Date	Name	Date	Name	Date
a	TONELLI_M	18-07-2022	TONELLI_M	09-03-2023	TONELLI_M	30-08-2023	TONELLI_M	26-01-2024

Sep.parts list | Design group

Replaced by | Subst. for | Orig. scale 1:10 ,

5LP250V-5A

L-0184
ASME

STEEL STRUCTURE
BRIDGE PUMP SIDE
LABY-GI® - NON-LUBE COMP.
ITEM NO.: C-001

Drawn: 14-04-2022 TONELLI_M
Verified: 30-01-2024 SABOGAL_A
Standards conform:

CAD-Drawing | Part-No. | Bar - Code

Burckhardt Compression | E | 1-125.619.981 | 1 - 2 d

This drawing is entrusted to the recipient personally, but the copyright remains with us. It must not be copied, reproduced or in any way communicated or made accessible to third parties without our written consent.

Similar Drwg.

Machining regulations see Drawing Standards.

Drawing 1-125.619.981

FRAME

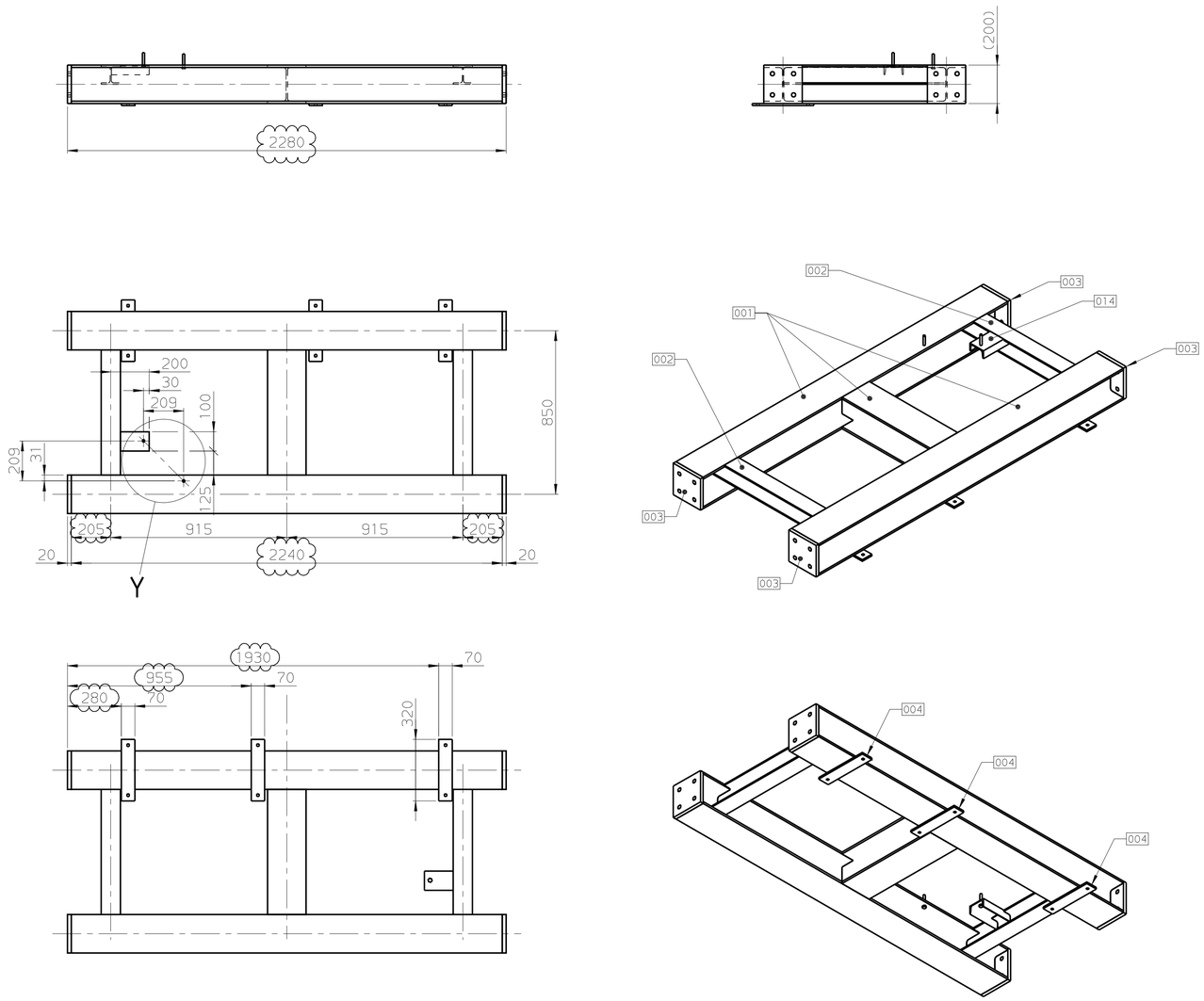

RAILING

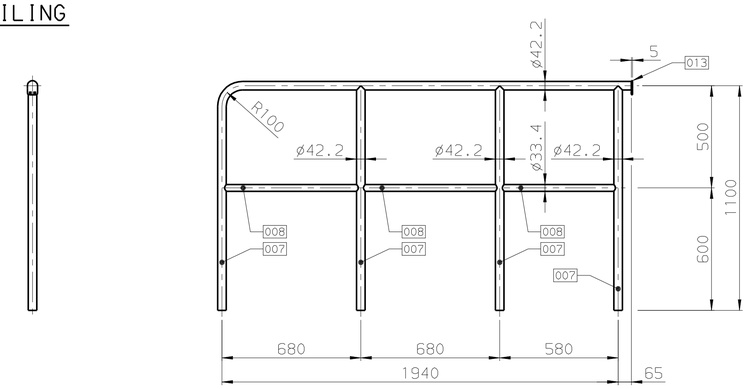

POS 003

THICKNESS 20mm
(SCALE 1:10)

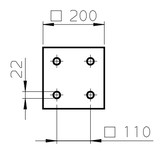

SHIMS POS 016/017

(SCALE 1:10)

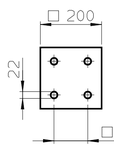

SET FOR ONE INTERFACE THICKNESS

1 × 3mm
2 × 1mm

POS 004

THICKNESS 10mm
(SCALE 1:10)

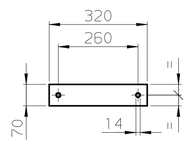

POS 013

THICKNESS 5mm
(SCALE 1:5)

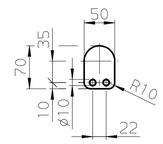

GRATING 01 (QTY 2) 009

THICKNESS 25mm

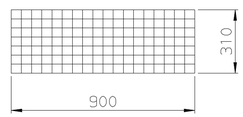

GRATING 02 (QTY 2) 009

THICKNESS 25mm

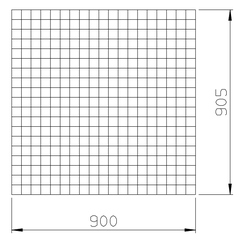

DETAIL Y

(SCALE 1:2)
SCREW MUST BE WELDED FROM BOTTOM

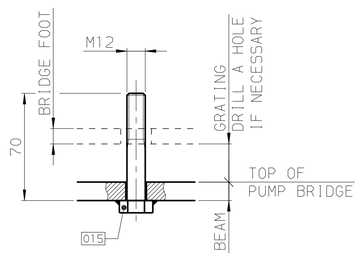

Modifications											
			a	TONELLI_M	18-07-2022	b	TONELLI_M	09-03-2023	c	TONELLI_M	30-08-2023	d	TONELLI_M	26-01-2024
				Name	Date		Name	Date		Name	Date		Name	Date

Sep.parts list	Design group		
Replaced by	Subst. for	Orig. scale 1:15 ,	

5LP250V-5A	STEEL STRUCTURE BRIDGE PUMP SIDE	Drawn: 19-04-2022 TONELLI_M
L-0184 ASME	LABY-GI® - NON-LUBE COMP. ITEM NO.: C-001	Verified: 30-01-2024 SABOGAL_A
		Standards conform:
CAD-Drawing	Part-No.	Bar - Code
Burckhardt Compression	E	1-125.619.981	2 - 2 d

This drawing is entrusted to the recipient personally, but the copyright remains with us. It must not be copied, reproduced or in any way communicated or made accessible to third parties without our written consent.

Similar Drwg.

Machining regulations see Drawing Standards.

Drawing 1-125.619.982

VIEW A

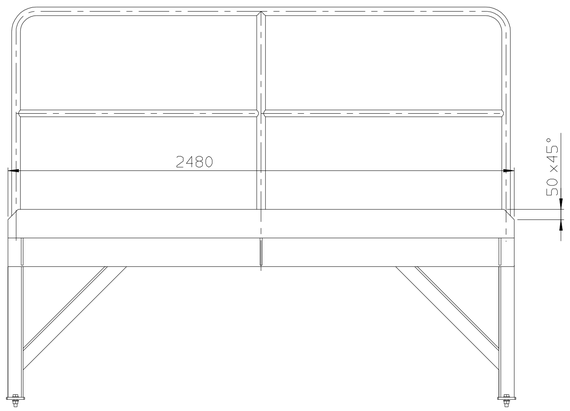

VIEW B

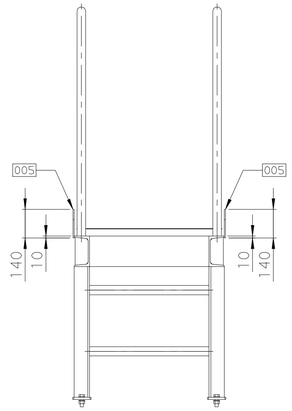

SECTION C-C

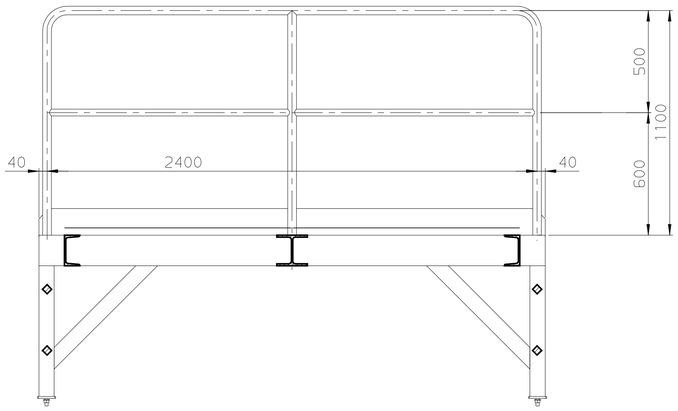

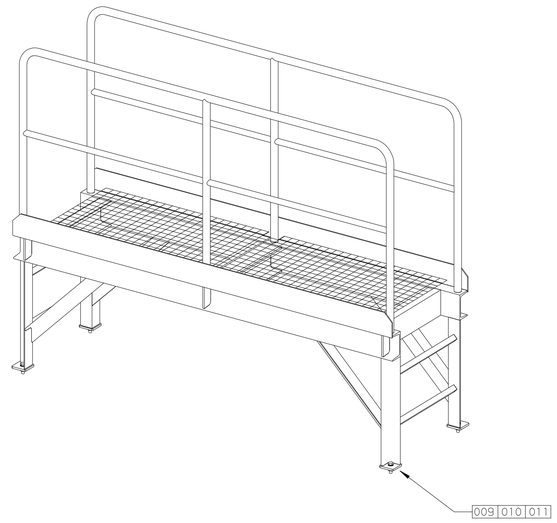

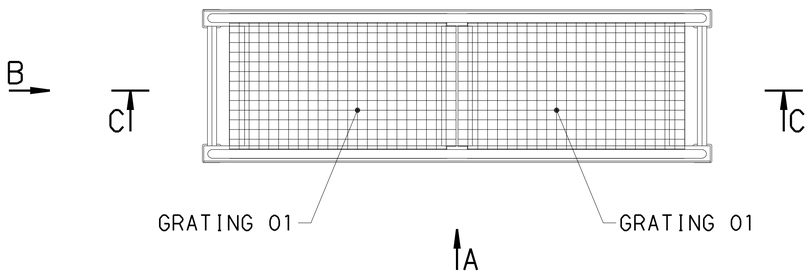

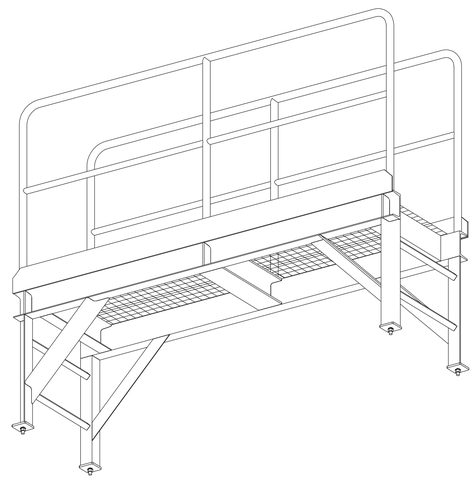

Execution Code Number	Pos.No. Code	Designation / Material and Remarks	Source of Supply / Approx. mass kg/pc	Mod. Letter	
0.6m	001	BEAM H-150x150	/	/	/
		SS400 KS D3503	18	/	/
6.5m	002	BEAM CH-150x75	/	/	/
		SS400 KS D3503	114	/	/
5m	003	BEAM L-75x75x9	/	/	/
		SS400 KS D3503	48	/	/
4	004	PLATE 90x90x10	/	/	/
		SS400 /	0.5	/	/
2	005	FOOT PLATE 2480x140x6	/	/	/
		SS400 /	16	/	/
11.5m	006	PIPE 1 1/4" (SCHED.10)	/	/	/
		A106 GR B ASME B36.10M	46	/	/
5m	007	PIPE 1" (SCHED.10)	/	/	/
		A106 GR B ASME B36.10M	15	/	/
1.6m²	008	GRATING (THK 25)	/	/	/
		/ /	/	/	/
4	009	HEX. HEAD BOLT W/SHANK M16x50/38	/	/	/
		8.8 DIN EN ISO 4014	/	/	/
4	010	HEX. NUT M16	/	/	/
		8 DIN EN ISO 4032	/	/	/
8	011	WASHER (M16)	/	/	/
		/ ISO 7089-16-200 HV	/	/	/
6	012	STIFFNER 136x64x10	/	/	/
		SS400 /	1	/	/
4	013	LADDER RUNG □ 22x585 (OR EQUIVALENT)	/	/	/
		SS400 /	1	/	/
APPROX WEIGHT			≈ 282 Kg		

NOTE:

1) ALL LISTE MATERIAL ARE WITHOUT ALLOWANCE.

QTY: 2

Burckhardt Compression

FOR APPROVAL

Documentation shall be deemed to be approved unless commented and/or rejected within 14 days

Mod. Front Lang.	Name	Date	Name	Date	Name	Date	Name	Date
a	TONELLI_M	24-08-2022	TONELLI_M	13-01-2023	TONELLI_M	08-03-2023		

Sep.parts list | Design group

Replaced by | Subst. for | Orig. scale 1:15

5LP250V-5A

L-0184
ASME

STEEL STRUCTURE
BRIDGE COMP. / MOTOR
LABY-GI® - NON-LUBE COMP.
ITEM NO.: C-001

Drawn: 14-04-2022 TONELLI_M
Verified: 10-03-2023 SABOGAL_A
Standards conform:

CAD-Drawing | Part-No. | Bar - Code

Burckhardt Compression | E | 1-125.619.982 | 1 - 2 c

This drawing is entrusted to the recipient personally, but the copyright remains with us. It must not be copied, reproduced or in any way communicated or made accessible to third parties without our written consent.

Similar Drwg.

Machining regulations see Drawing Standards.

Drawing 1-125.619.982

FRAME

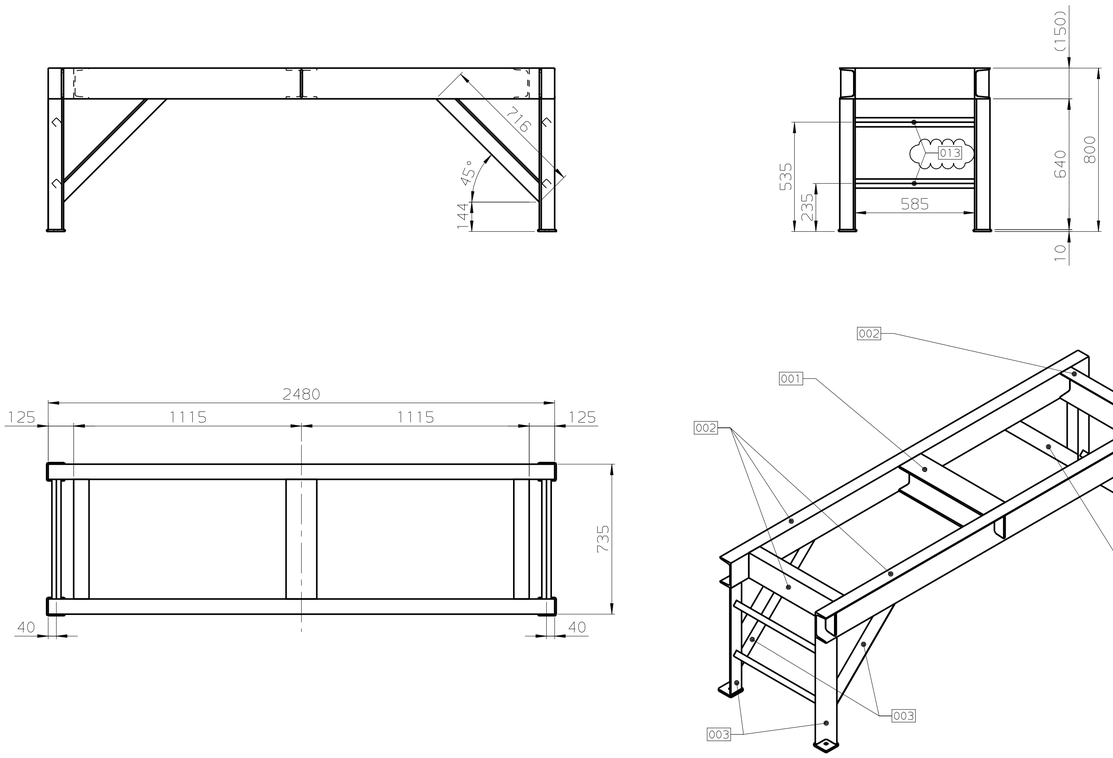

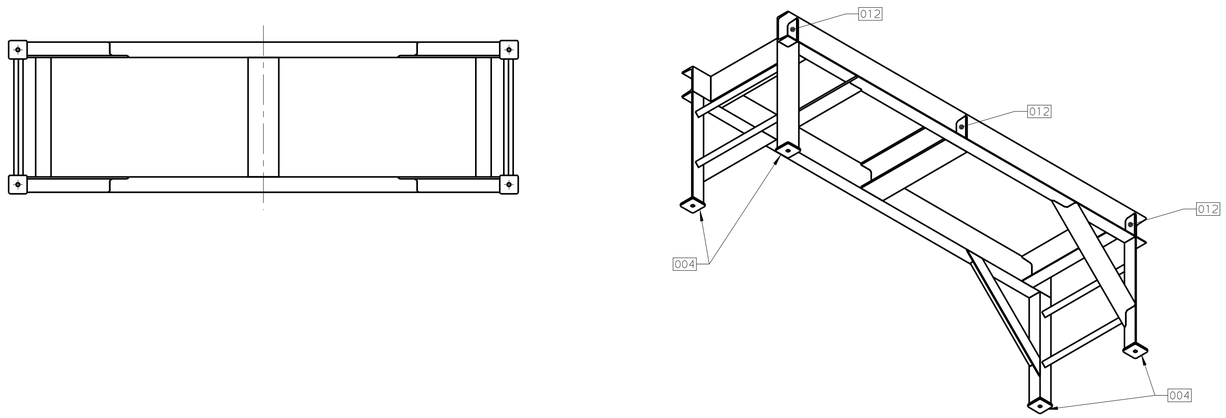

RAILING (QTY 2)

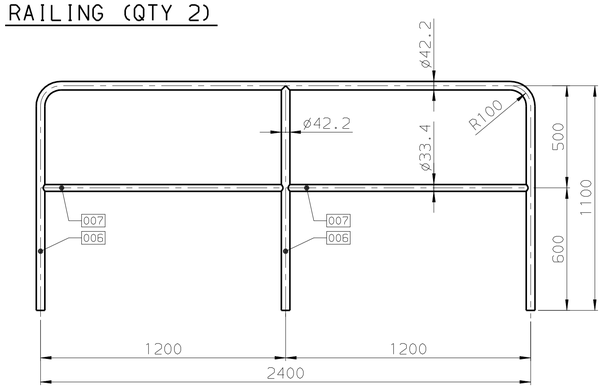

POS 004

THICKNESS 10mm
(SCALE 1:5)

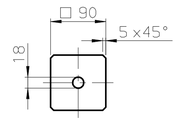

POS 012

THICKNESS 10mm
(SCALE 1:5)

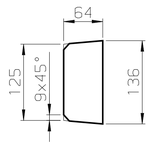

GRATING 01 (QTY 2) 008

THICKNESS 25mm

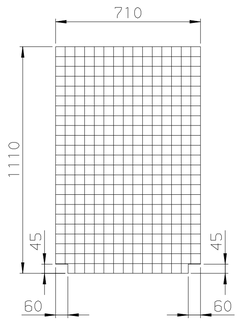

Modifications											
a	TONELLI_M	24-08-2022	b	TONELLI_M	13-01-2023	c	TONELLI_M	08-03-2023			
	Name	Date		Name	Date		Name	Date		Name	Date

Sep.parts list	Design group	
Replaced by	Subst. for	Orig. scale 1:15 ,

5LP250V-5A	STEEL STRUCTURE BRIDGE COMP. / MOTOR	Drawn: 19-04-2022 TONELLI_M
L-0184 ASME	LABY-GI® - NON-LUBE COMP. ITEM NO.: C-001	Verified: 10-03-2023 SABOGAL_A
		Standards conform:
CAD-Drawing	Part-No. / Bar - Code	
Burckhardt Compression	E 1-125.619.982	2 - 2 c

This drawing is entrusted to the recipient personally, but the copyright remains with us. It must not be copied, reproduced or in any way communicated or made accessible to third parties without our written consent.

Similar Drwg.

Machining regulations see Drawing Standards.

Drawing 1-125.622.368

VIEW A

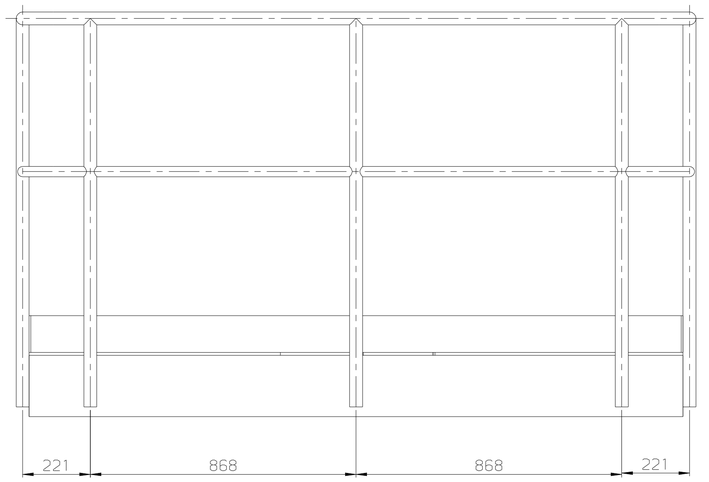

VIEW B

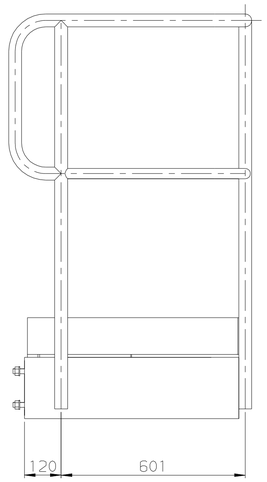

A SET만 제작

Execution Code Number	Pos.No. Code	Designation / Material and Remarks	Source of Supply / Approx. mass kg/pc	Mod. Letter	
Number OFF					
7.1m	001	BEAM CH-200x90	/	/	/
		SS400 KS D3503	214	/	/
0.6m	002	BEAM CH-100x50	/	/	/
		SS400 KS D3503	5	/	/
4	003	PLATE 180x76x10	/	/	/
		SS400 /	1	/	/
1	004	FOOT PLATE 2123x120x6	/	/	/
		SS400 /	12	/	/
2	005	FOOT PLATE 687x120x6	/	/	/
		SS400 /	8	/	/
1	006	FOOT PLATE 265x150x6	/	/	/
		SS400 /	14	/	/
1	007	FOOT PLATE 228x150x6	/	/	/
		SS400 /	14	/	/
1	008	FOOT PLATE 300x150x6	/	/	/
		SS400 /	14	/	/
1	009	FOOT PLATE 337x150x6	/	/	/
		SS400 /	14	/	/
11.5m	010	PIPE 1 1/4" (SCHED.10)	/	/	/
		A106 GR B ASME B36.10M	22	/	/
3.5m	011	PIPE 1" (SCHED.10)	/	/	/
		A106 GR B ASME B36.10M	7	/	/
1.3m²	012	GRATING (THK 25)	/	/	/
		/ /	/	/	/
8	013	HEX. HEAD BOLT W/SHANK M16x50/46	/	/	/
		8.8 DIN EN ISO 4014	/	/	/
8	014	HEX. NUT M16	/	/	/
		8 DIN EN ISO 4032	/	/	/
16	015	WASHER (M16)	/	/	/
		/ ISO 7089-20-200 HV	/	/	/
APPROX WEIGHT			≈ 371 Kg		

NOTE:

1) ALL LISTE MATERIAL ARE WITHOUT ALLOWANCE.

VIEW C

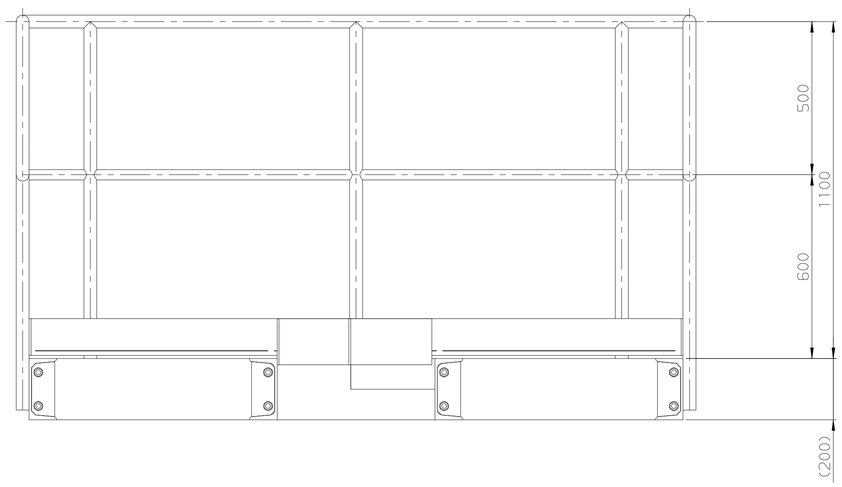

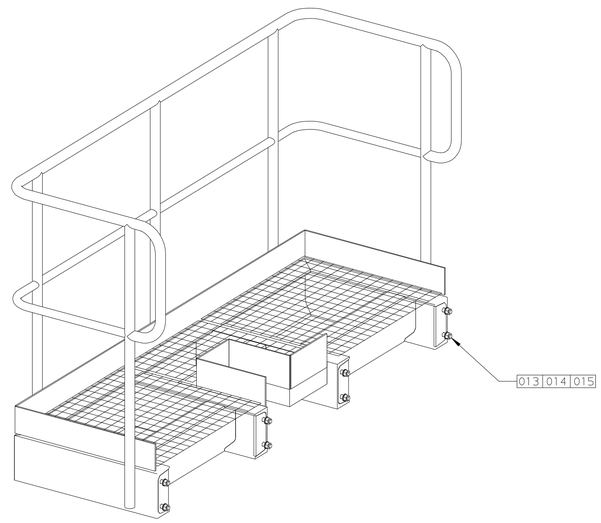

TYPICAL FOR POS 006-009 FOOT PLATE

(SCALE 1:5)

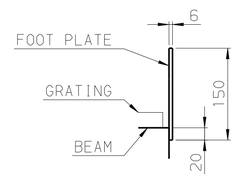

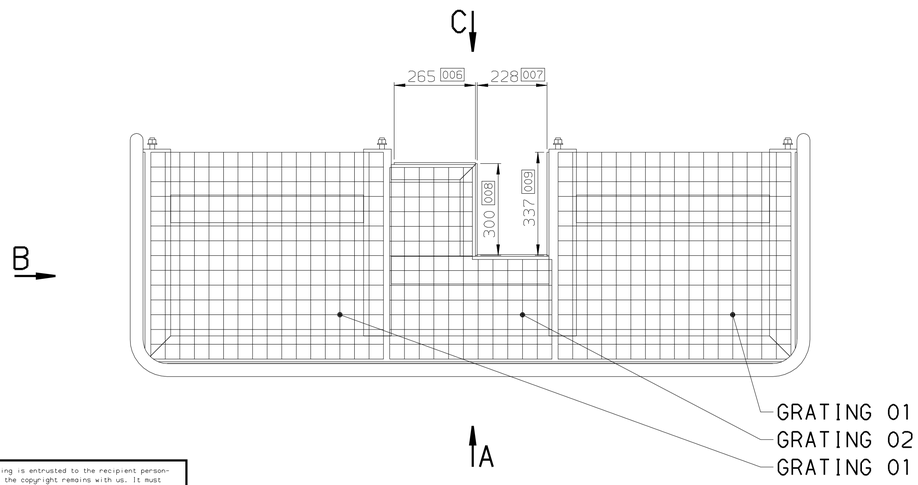

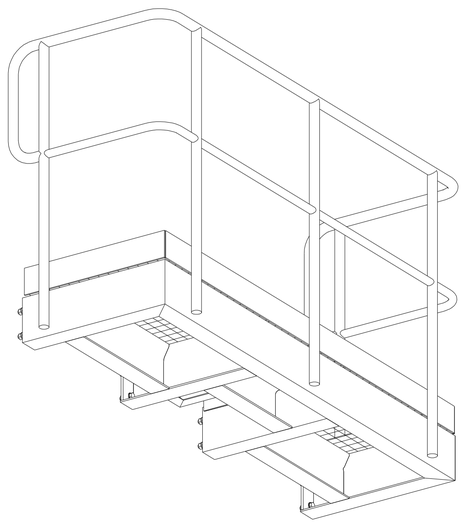

Burckhardt Compression

FOR APPROVAL

Documentation shall be deemed to be approved unless commented and/or rejected within 14 days

Modifications	Name	Date	Name	Date	Name	Date	Name	Date

Sep.parts list	Design group		
Replaced by	Subst. for	Orig. scale 1:10 ,	
5LP250V-5A	STEEL STRUCTURE BALCONY M2	Drawn:	10-03-2023 TONELLI_M
L-0184 ASME	LABY-GI® - NON-LUBE COMP. ITEM NO.: C-001	Verified:	31-05-2023 SABOGAL_A
		Standards conform:	
CAD-Drawing	Part-No. / Bar - Code		
Burckhardt Compression	E	1-125.622.368	1 - 2

This drawing is entrusted to the recipient personally, but the copyright remains with us. It must not be copied, reproduced or in any way communicated or made accessible to third parties without our written consent.

Similar Drwg.

Machining regulations see Drawing Standards.

Drawing 1-125.622.368

FRAME

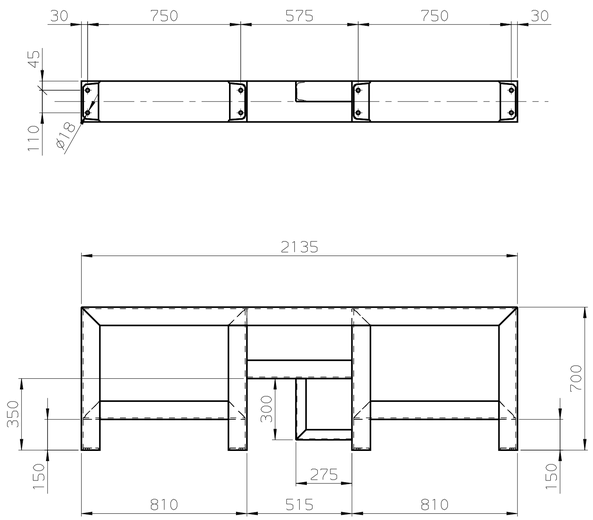

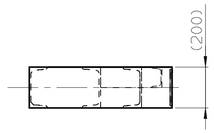

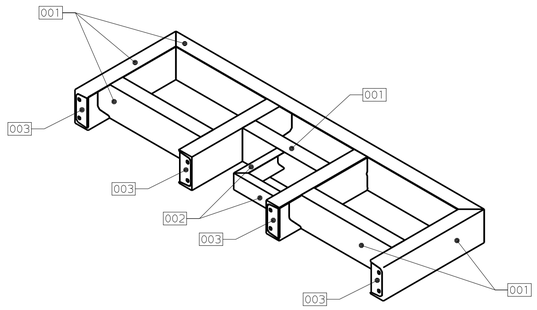

RAILING

A SET만 제작

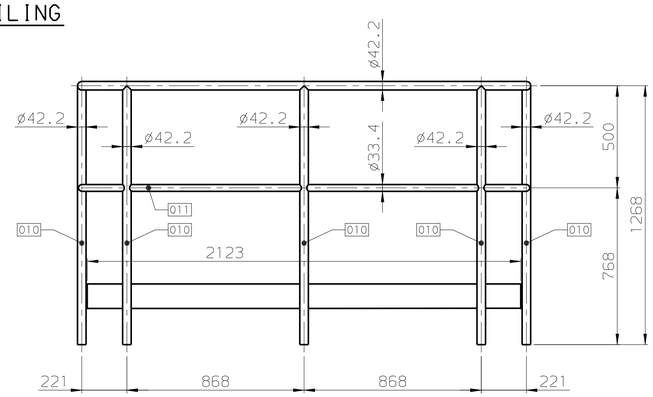

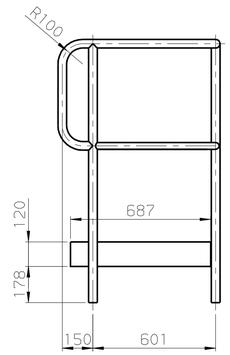

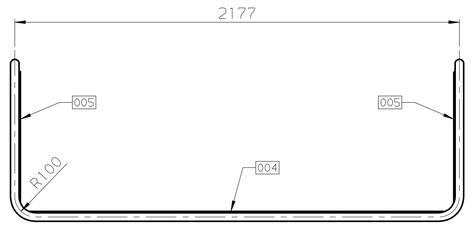

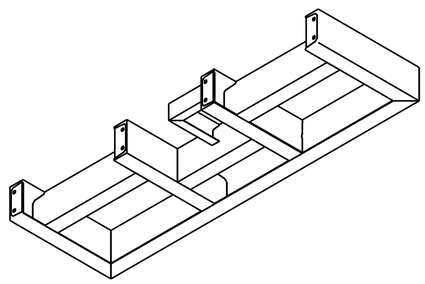

POS 003

THICKNESS 10mm
(SCALE 1:5)

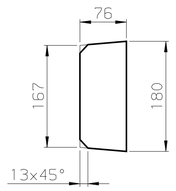

GRATING 01 (QTY 2) 012

THICKNESS 25mm

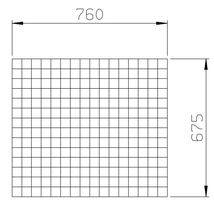

GRATING 02 012

THICKNESS 25mm

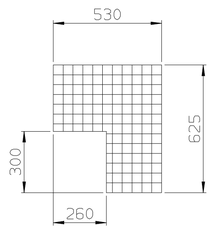

This drawing is entrusted to the recipient personally, but the copyright remains with us. It must not be copied, reproduced or in any way communicated or made accessible to third parties without our written consent.

Similar Drwg.

Machining regulations see Drawing Standards.

Modifications	Name	Date	Name	Date	Name	Date	Name	Date

Sep.parts list | Design group

Replaced by | Subst. for | Orig. scale 1:15

5LP250V-5A

L-0184
ASME

STEEL STRUCTURE
BALCONY M2

LABY-GI® - NON-LUBE COMP.

ITEM NO.: C-001

Drawn: 26-04-2023 TONELLI_M

Verified: 31-05-2023 SABOGAL_A

Standards conform:

CAD-Drawing

Part-No.

Bar - Code

Burckhardt Compression

E | 1-125.622.368 | 2 - 2

Drawing 2-125.619.983

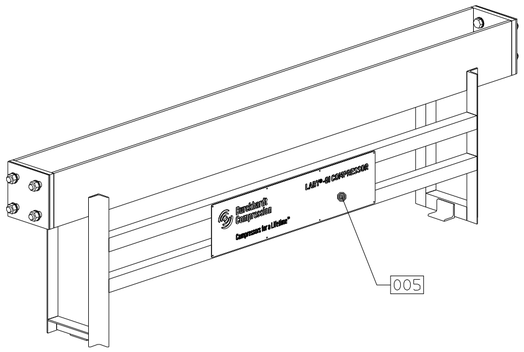

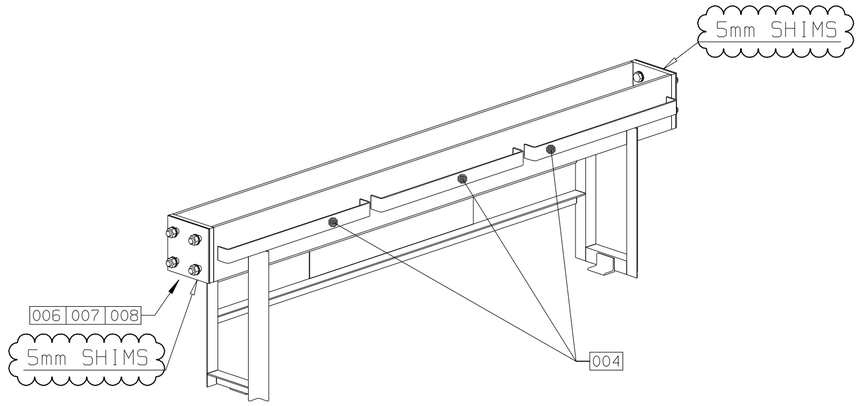

Number OFF	Pos.No. Code	Designation / Material and Remarks	Source of Supply / Approx. mass kg/pc	Mod. Letter	
2.3m	001	BEAM H-200x200	/	/	/
		SS400 KS D3503	112	/	/
6.5m	002	BEAM L-50x50x6	/	/	/
		SS400 KS D3503	28	/	/
2	003	PLATE 200x200x20	/	/	/
		SS400 /	6	/	/
3	004	FLATBAR 50x50x700x5	/	/	/
		SS400 /	2	/	/
1	005	NAME PLATE	/	/	/
		/ /	/	/	/
8	006	HEX. HEAD BOLT W/SHANK M20x70/46	/	/	/
		8.8 DIN EN ISO 4014	/	/	/
8	007	HEX. NUT M20	/	/	/
		8 DIN EN ISO 4032	/	/	/
16	008	WASHER (M20)	/	/	/
		/ ISO 7089-20-200 HV	/	/	/
2	009	SHIMS 200x200x3	/	/	/
		SS400 /	/	/	/
4	010	SHIMS 200x200x1	/	/	/
		SS400 /	/	/	/
APPROX WEIGHT			≈ 155 Kg		

Execution Code Number ___

NOTE:

1) ALL LISTE MATERIAL ARE WITHOUT ALLOWANCE.

POS 003

THICKNESS 20mm
(SCALE 1:10)

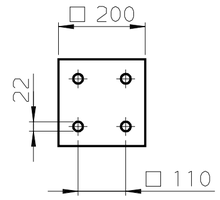

SHIMS
POS 009/010

(SCALE 1:10)

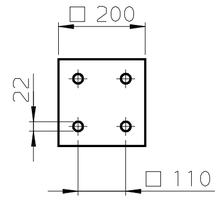

SET FOR ONE INTERFACE THICKNESS

1 x 3mm
2 x 1mm

POS 004

WIDTH 50mm
(SCALE 1:10)

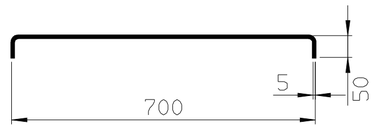

FRAME

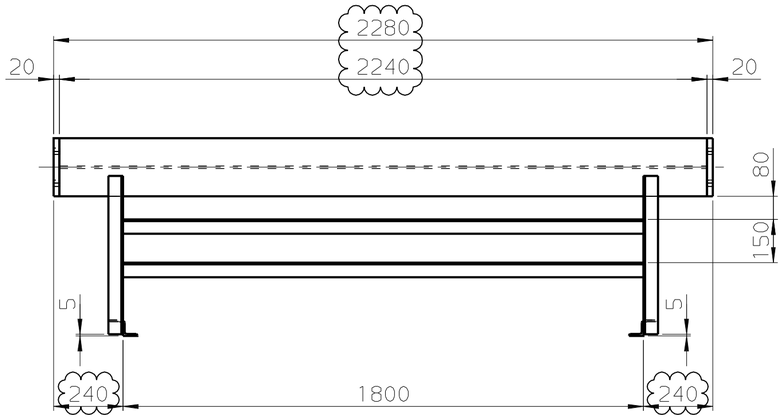

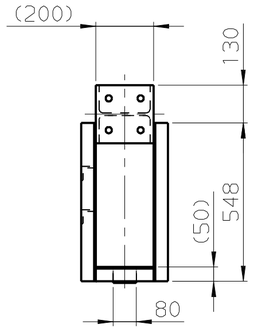

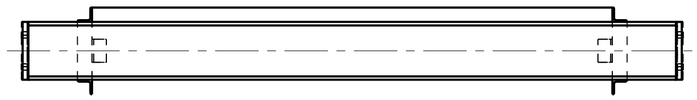

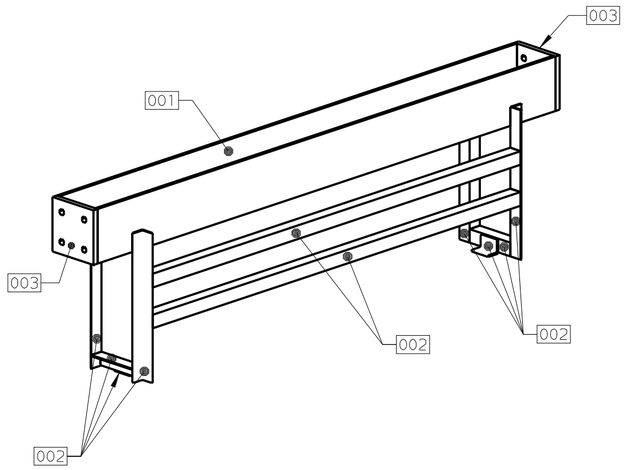

POS 002

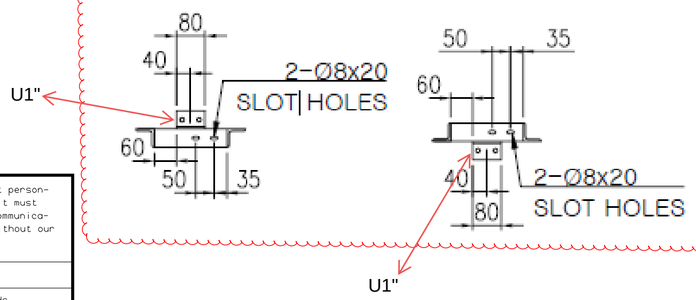

Burckhardt Compression

FOR APPROVAL

Documentation shall be deemed to be approved unless commented and/or rejected within 14 days

Modifications	Name	Date	Name	Date	Name	Date	Name	Date
a	TONELLI_M	26-01-2024						

Sep.parts list	Design group	
Replaced by	Subst. for	Orig. scale 1:15 ,

SLP250V-5A	STEEL STRUCTURE STIFFNER	Drawn: 14-04-2022 TONELLI_M
L-0184 ASME	LABY-GI® - NON-LUBE COMP. ITEM NO.: C-001	Verified: 30-01-2024 SABOGAL_A
		Standards conform:
CAD-Drawing	Part-No. / Bar - Code	
Burckhardt Compression	E	2-125.619.983 — 1 - 1 a

This drawing is entrusted to the recipient personally, but the copyright remains with us. It must not be copied, reproduced or in any way communicated or made accessible to third parties without our written consent.

Similar Drwg.

Machining regulations see Drawing Standards.

Drawing 1-125.623.891

VIEW A

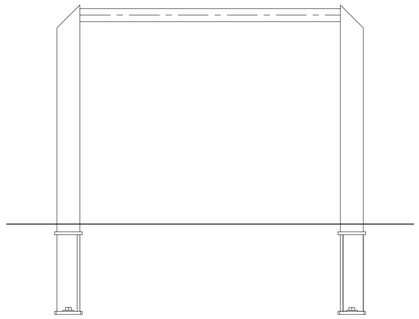

VIEW B

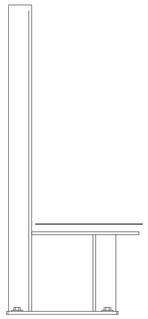

Execution Code Number	Pos.No. Code	Designation / Material and Remarks	Source of Supply / Approx. mass kg/pc	Mod. Letter	
Number OFF					
2.5m	001	BEAM L-75x75x9	/	/	/
		SS400 KS D3503	25	/	/
0.85m	002	PIPE 1 1/4" (SCHED.10)	/	/	/
		A106 GR B ASME B36.10M	3	/	/
2	003	PLATE 365x90x10	/	/	/
		SS400 /	5	/	/
2	004	PLATE 350x90x10	/	/	/
		SS400 /	5	/	/
0.5m²	005	GRATING (THK 25)	/	/	/
		/ /	/	/	/
4	006	HEX. NUT M12	/	/	/
		8 DIN EN ISO 4032	/	/	/
4	007	3D-WASHER D=37/13x3 (FOR M12)	/	/	/
		/ DIN 9021 / ISO 7093	/	/	/
APPROX WEIGHT			≈ 38 Kg		

NOTE:

1) ALL LISTE MATERIAL ARE WITHOUT ALLOWANCE.

B

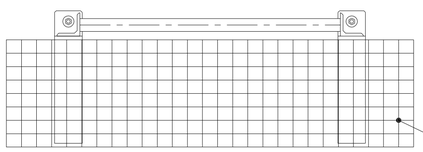

GRATING 01

A

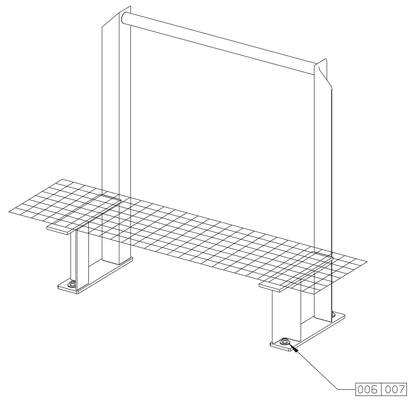

QTY: 2

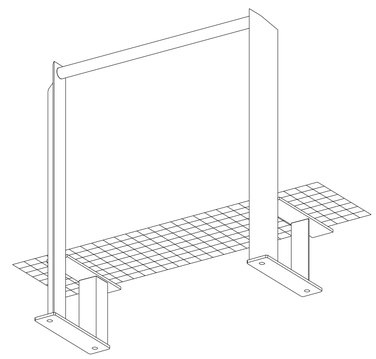

Burckhardt Compression

FOR APPROVAL

Documentation shall be deemed to be approved unless commented and/or rejected within 14 days

Modifications	Name	Date	Name	Date	Name	Date	Name	Date

Sep.parts list | Design group

Replaced by | Subst. for | Orig. scale 1:10 ,

5LP250V-5A

L-0184
ASME

STEEL STRUCTURE
BRIDGE (STEP) OVER PIPE
LABY-GI® - NON-LUBE COMP.
ITEM NO.: C-001

Drawn: 31-08-2023 TONELLI_M
Verified: 15-09-2023 SABOGAL_A
Standards conform:

CAD-Drawing | Part-No. | Bar - Code

Burckhardt Compression | E | 1-125.623.891 | 1 - 2

This drawing is entrusted to the recipient personally, but the copyright remains with us. It must not be copied, reproduced or in any way communicated or made accessible to third parties without our written consent.

Similar Drwg.

Machining regulations see Drawing Standards.

Drawing 1-125.623.891

FRAME

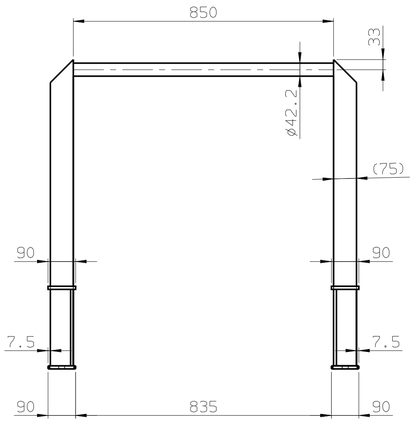

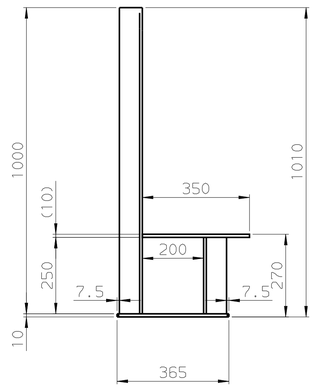

POS 004 (QTY 2)

THICKNESS 10mm
(SCALE 1:5)

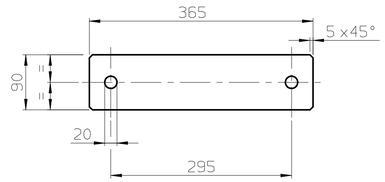

GRATING 01 005

THICKNESS 25mm

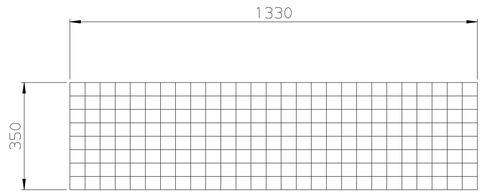

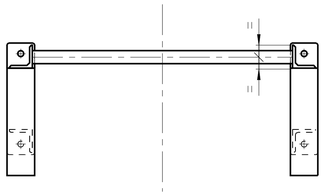

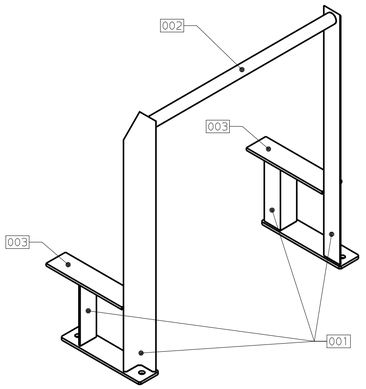

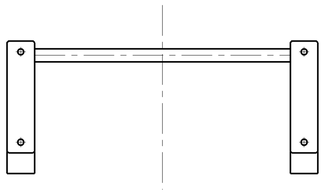

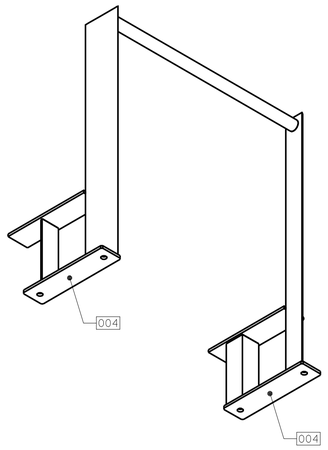

Modifications	Name	Date	Name	Date	Name	Date	Name	Date

Sep.parts list	Design group		
Replaced by	Subst. for	Orig. scale 1:10 ,	

SLP250V-SA	STEEL STRUCTURE BRIDGE (STEP) OVER PIPE LABY-GI® - NON-LUBE COMP. ITEM NO.: C-001	Drawn:	31-08-2023 TONELLI_M
L-0184 ASME		Verified:	15-09-2023 SABOGAL_A
		Standards conform:	
CAD-Drawing	Part-No.	Bar - Code	
Burckhardt Compression	E	1-125.623.891	2 - 2

This drawing is entrusted to the recipient personally, but the copyright remains with us. It must not be copied, reproduced or in any way communicated or made accessible to third parties without our written consent.

Similar Drwg.

Machining regulations see Drawing Standards.

Drawing 2-125.619.994

1) FULL PENETRATION WELDED

A SET만 제작

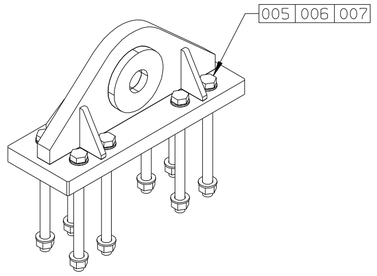

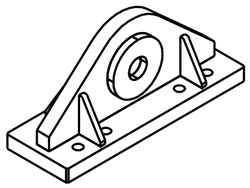

Execution Code Number	Pos.No. Code	Designation / Material and Remarks	Source of Supply / Approx. mass kg/pc	Mod. Letter
Number OFF				
1	001	PLATE 580x200x40	/	/ /
		~~S355~~ SS400 /	35	/ /
1	002	PLATE 540x240x40	/	/ /
		~~S355~~ SS400 /	27	/ /
4	003	PLATE 110x70x15	/	/ /
		~~S355~~ SS400 /	5	/ /
2	004	PLATE ø160x20	/	/ /
		~~S355~~ SS400 /	3	/ /
8	005	HEX. HEAD BOLT W/SHANK M24x310/73	/	/ /
		8.8 DIN EN ISO 4014	/	/ /
8	006	HEX. NUT M24	/	/ /
		8 DIN EN ISO 4032	/	/ /
16	007	WASHER (M24)	/	/ /
		/ ISO 7089-24-200 HV	/	/ /
APPROX WEIGHT			≈ 88 Kg	

NOTE:

1) ALL LISTE MATERIAL ARE WITHOUT ALLOWANCE.

VIEW A

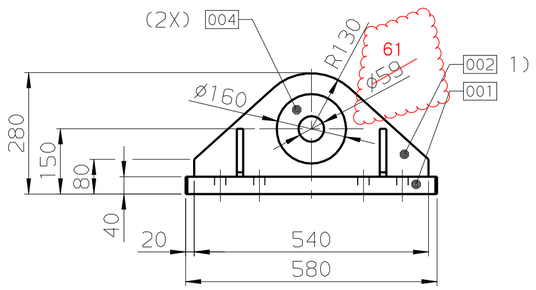

VIEW B

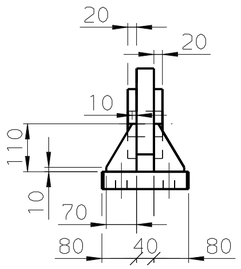

POS 001

THICKNESS 40mm

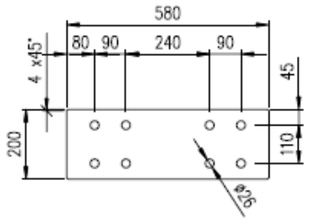

1EA 35kg

POS 002

THICKNESS 45mm

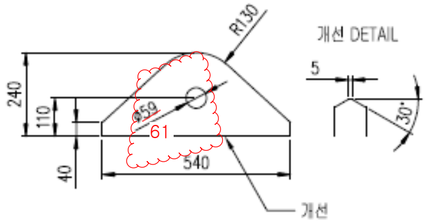

1EA 27kg

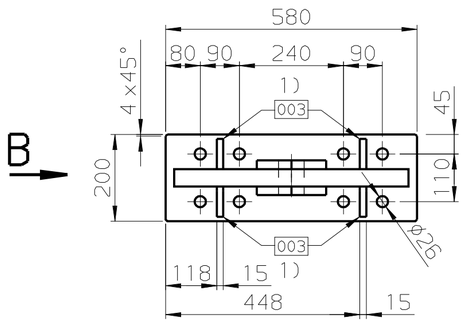

A

POS 003

THICKNESS 15mm

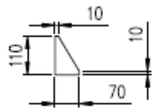

4EA 3kg

POS 004

THICKNESS 20mm

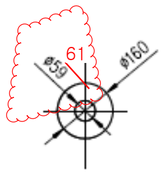

2EA 6kg

Burckhardt Compression

FOR APPROVAL

Documentation shall be deemed to be approved unless commented and/or rejected within 14 days

Modifications	Name	Date	Name	Date	Name	Date	Name	Date
a	TONELLI_M	16-10-2023						

Sep.parts list | Design group

Replaced by | Subst. for | Orig. scale 1:10 ,

5LP250V-5A	STEEL STURCTURE LIFTING DEVICE M3	Drawn: 14-04-2022 TONELLI_M
L-0184 ASME	LABY-GI® - NON-LUBE COMP. ITEM NO.: C-001	Verified: 16-10-2023 SABOGAL_A
		Standards conform:
CAD-Drawing	Part-No. / Bar - Code	
Burckhardt Compression	E 2-125.619.994	1 - 1 a

This drawing is entrusted to the recipient personally, but the copyright remains with us. It must not be copied, reproduced or in any way communicated or made accessible to third parties without our written consent.

Similar Drwg.

Machining regulations see Drawing Standards.