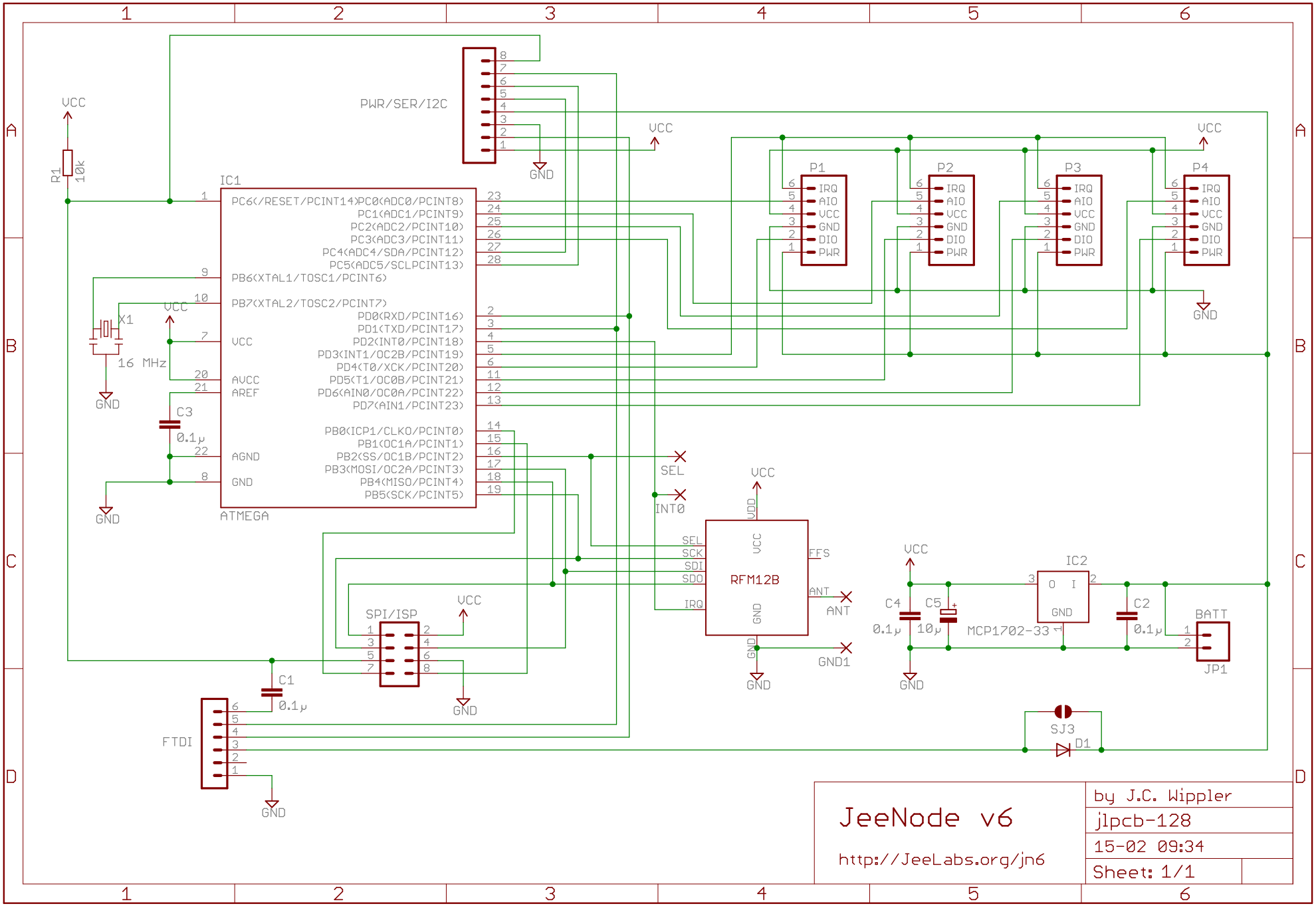

JeeNode v6

http://JeeLabs.org/jn6

by J.C. Wippler

jlpcb-128

15-02 09:34

Sheet: 1/1