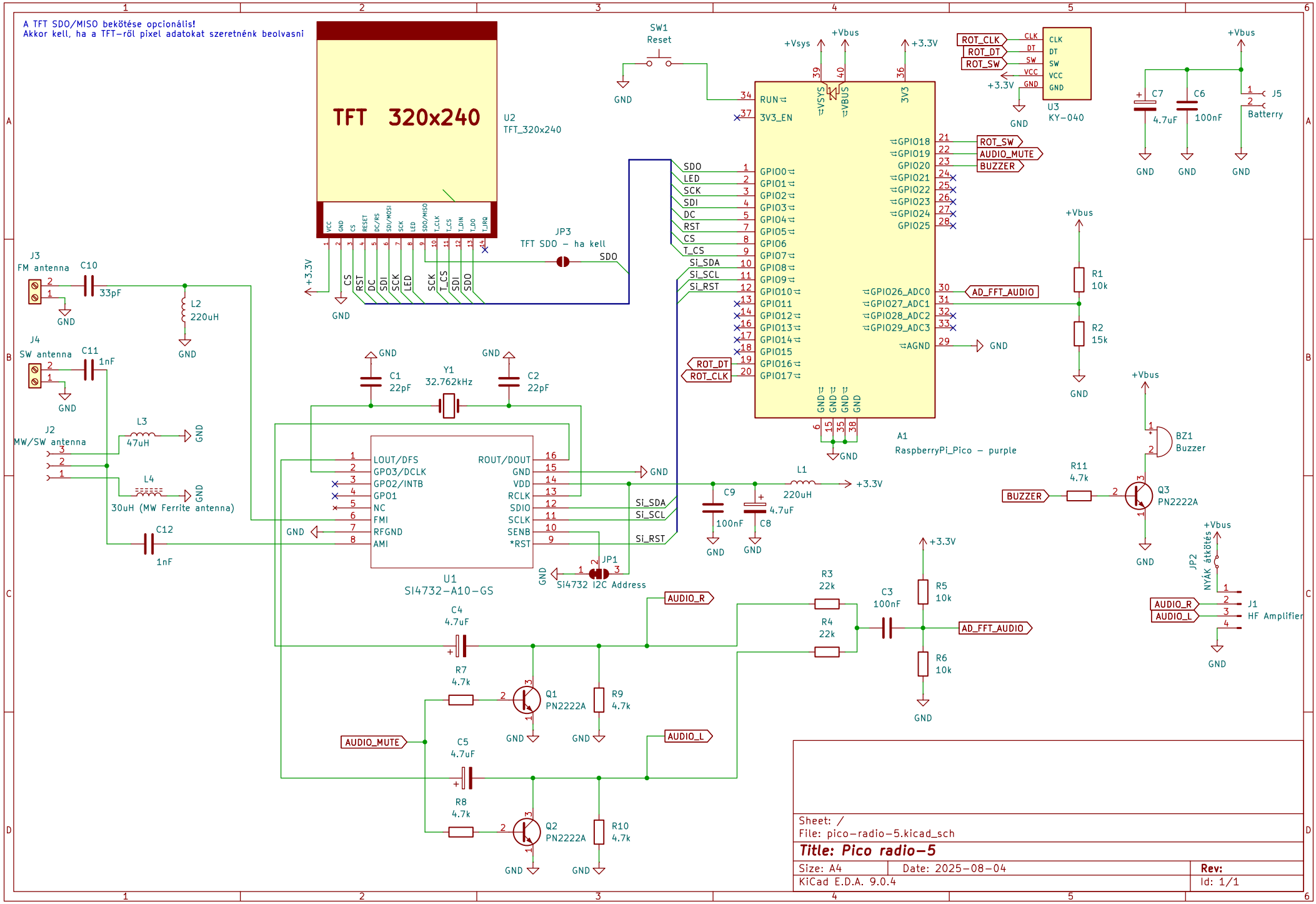

Sheet: /
File: pico-radio-5.kicad_sch

Title: Pico radio-5

Size: A4	Date: 2025-08-04	Rev:
KiCad E.D.A. 9.0.4		Id: 1/1