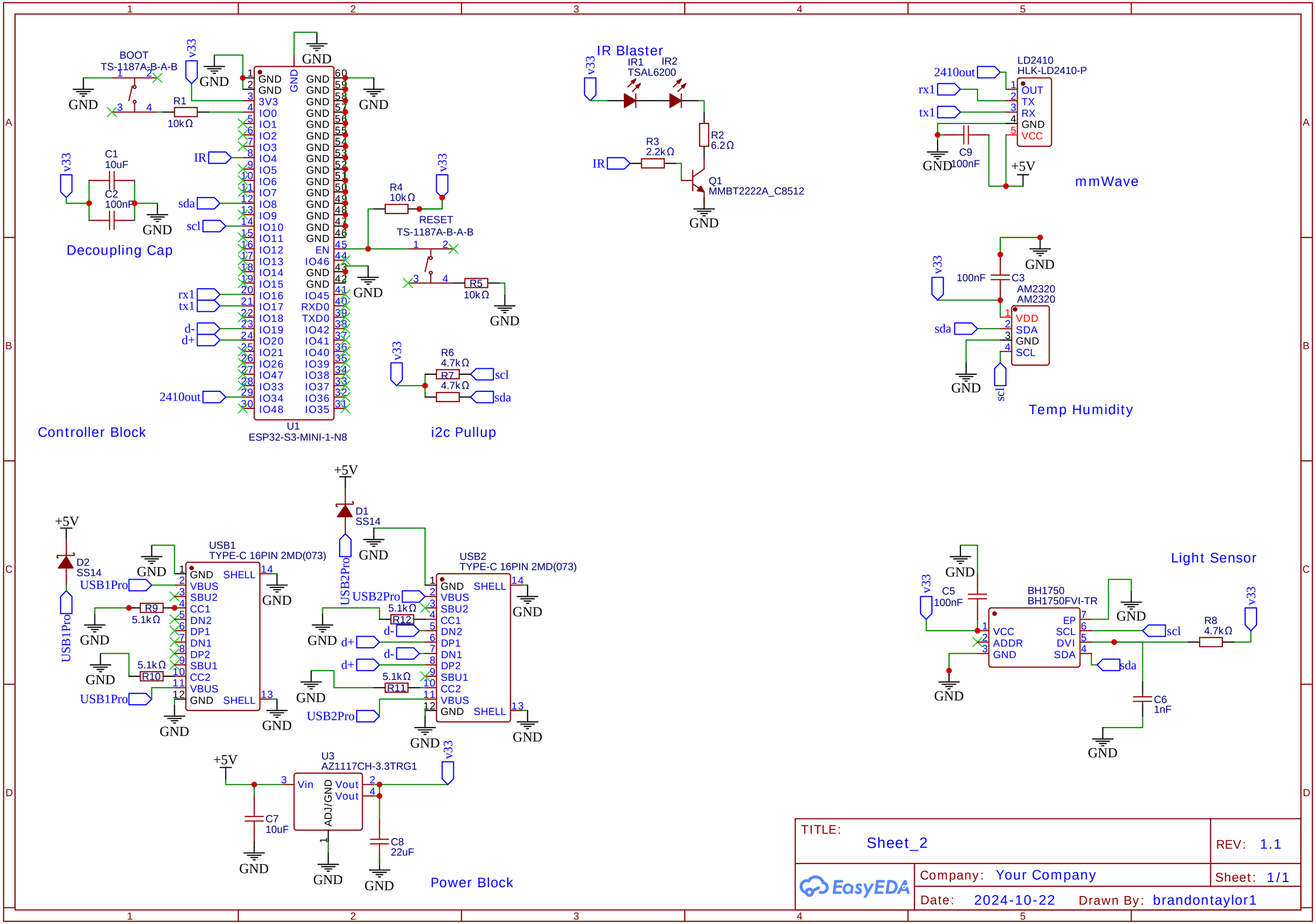
Controller Block
U1
ESP32-S3-MINI-1-N8
BOOT
TS-1187A-B-A-B
R1
10kΩ
C1
10uF
C2
100nF
Decoupling Cap
R4
10kΩ
RESET
TS-1187A-B-A-B
R5
10kΩ
R6
4.7kΩ
R7
4.7kΩ
i2c Pullup
IR Blaster
IR1
IR2
TSAL6200
R2
6.2Ω
R3
2.2kΩ
Q1
MMBT2222A_C8512
LD2410
HLK-LD2410-P
C9
100nF
mmWave
C3
100nF
AM2320
Temp Humidity
USB1
TYPE-C 16PIN 2MD(073)
USB2
TYPE-C 16PIN 2MD(073)
D1
SS14
D2
SS14
R9
5.1kΩ
R10
5.1kΩ
R11
5.1kΩ
R12
5.1kΩ
U3
AZ1117CH-3.3TRG1
C7
10uF
C8
22uF
Power Block
C5
100nF
BH1750
BH1750FVI-TR
R8
4.7kΩ
C6
1nF
Light Sensor
TITLE:
Sheet_2
REV: 1.1
Company: Your Company
Sheet: 1/1
Date: 2024-10-22
Drawn By: brandontaylor1
EasyEDA