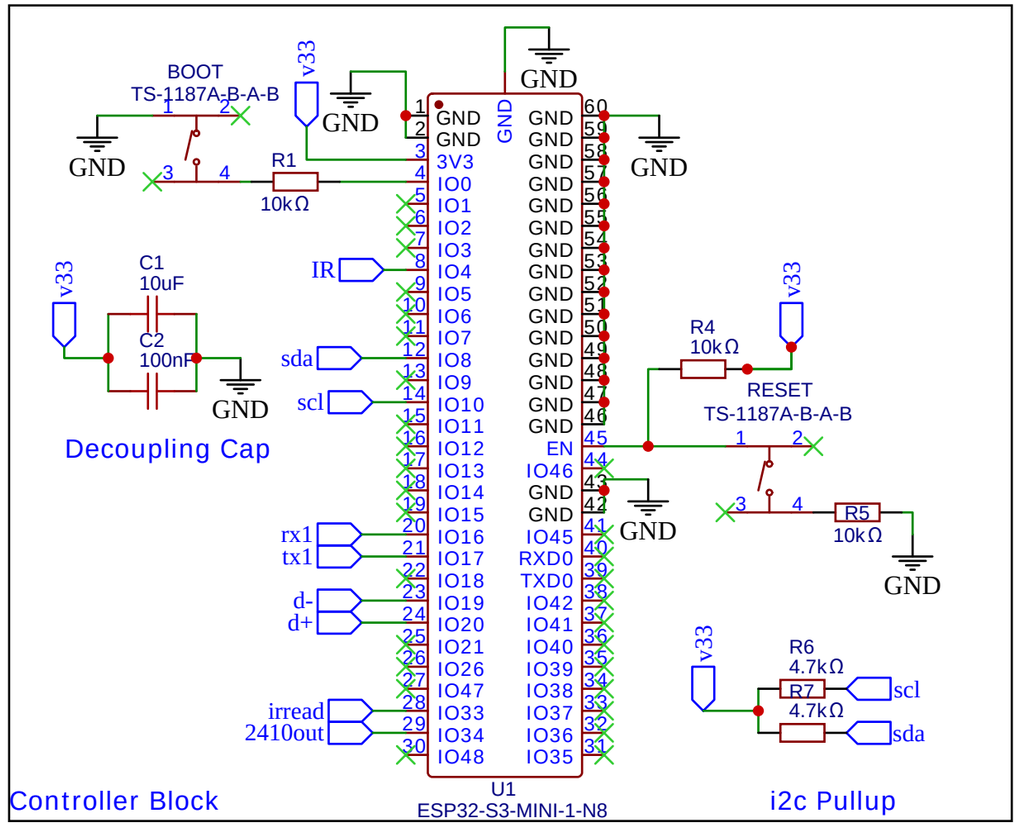

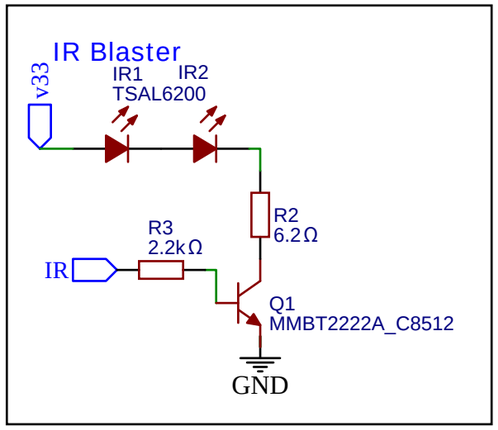

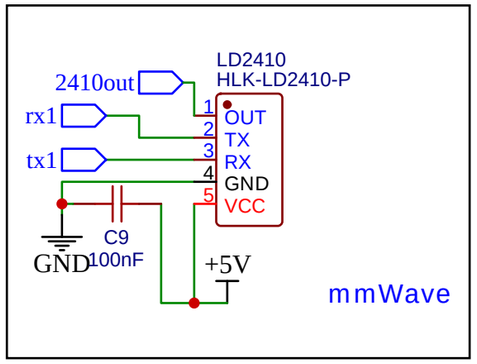

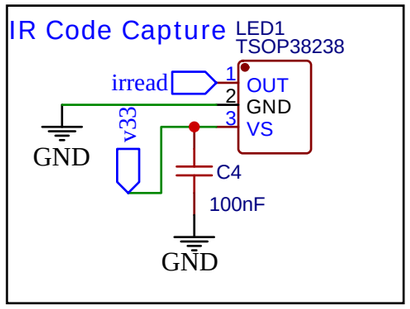

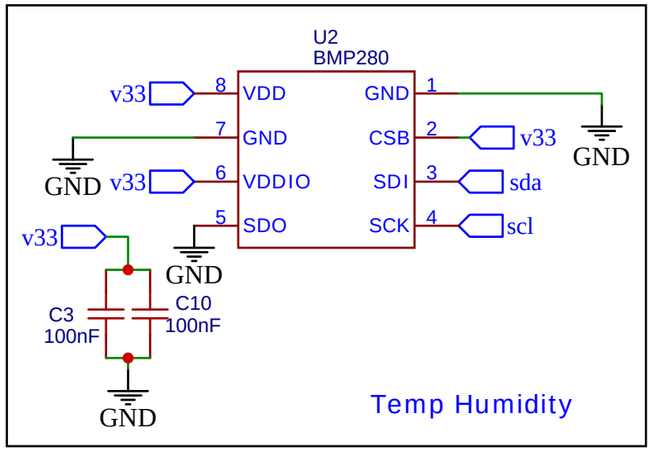

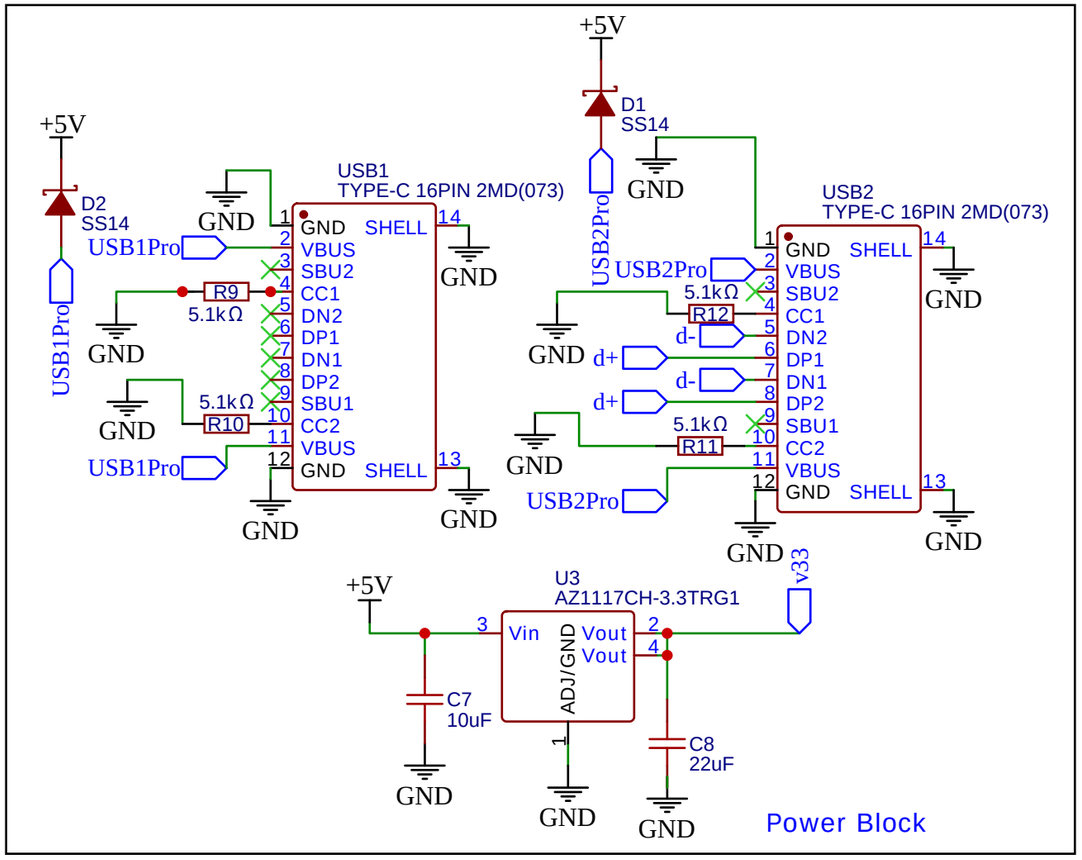

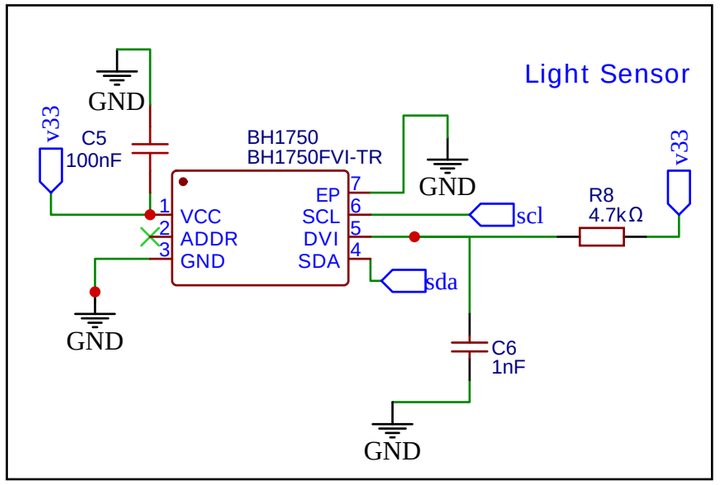

TITLE: Sheet_2	REV: 1.1
EasyEDA Company: Your Company	Sheet: 1/1
Date: 2024-10-22 Drawn By: brandontaylor1	