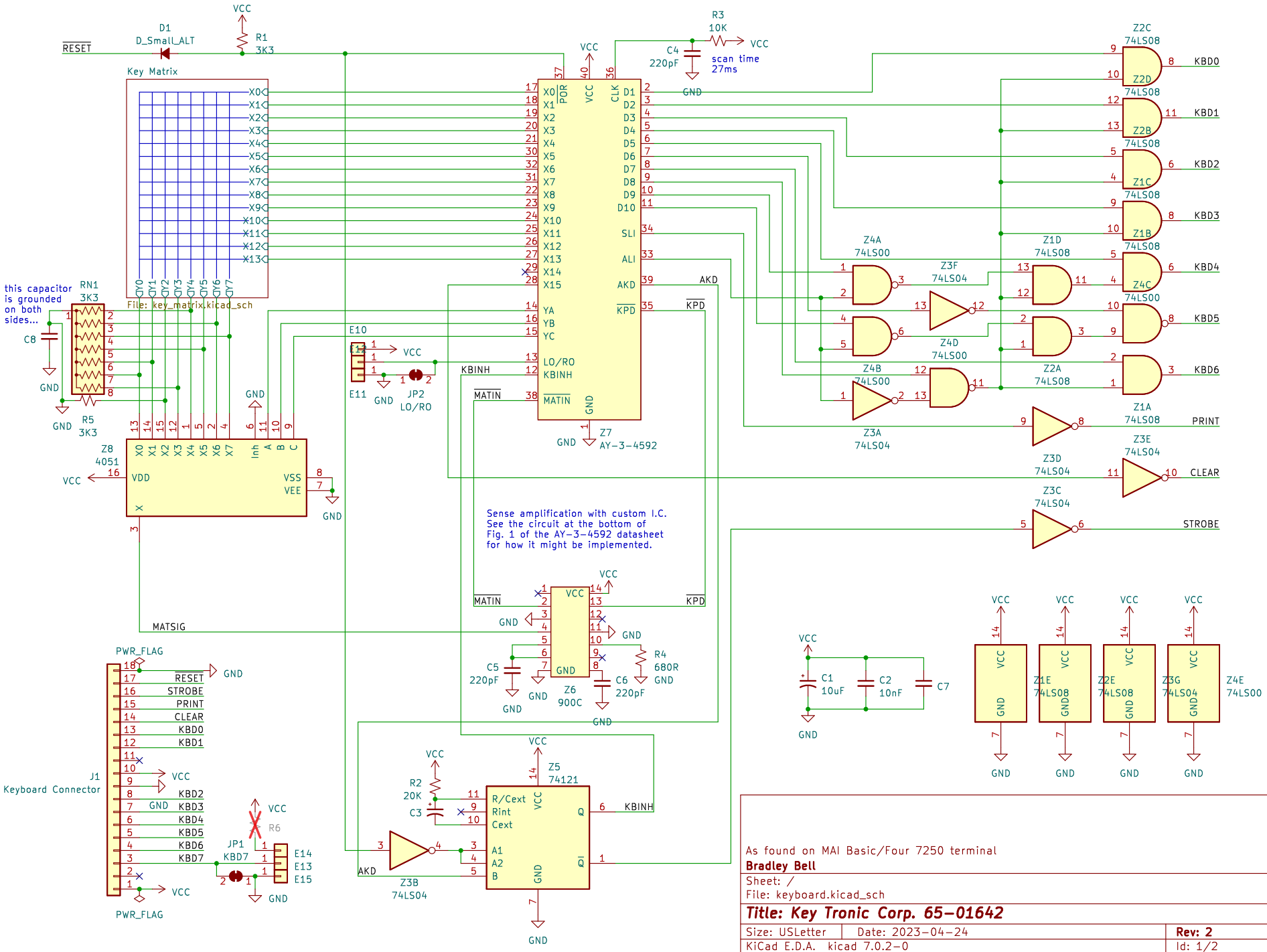

As found on MAI Basic/Four 7250 terminal

Bradley Bell

Sheet: /

File: keyboard.kicad_sch

Title: Key Tronic Corp. 65-01642

Size: USLetter	Date: 2023-04-24	**Rev: 2**
KiCad E.D.A. kicad 7.0.2-0		Id: 1/2

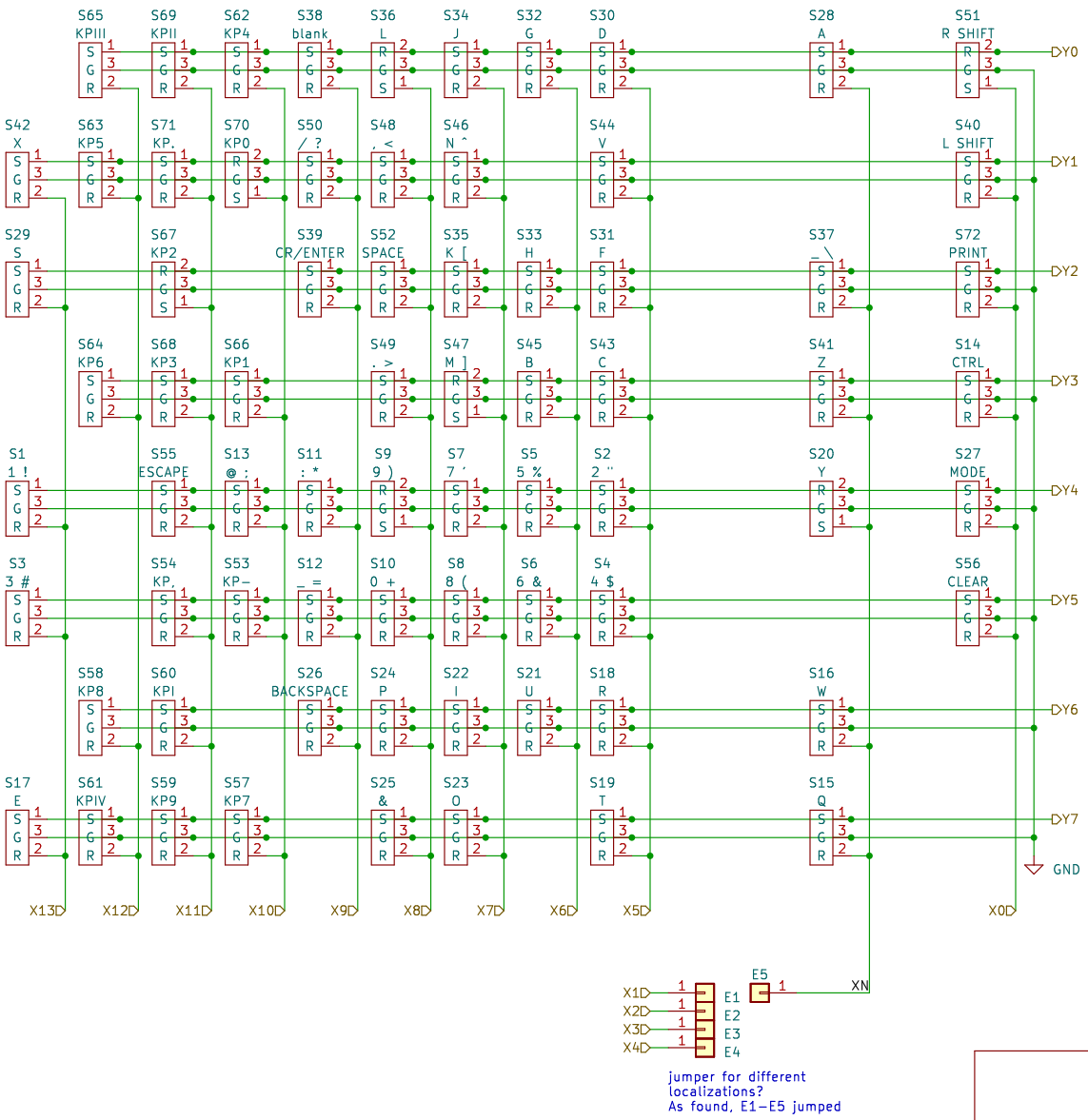

Bradley Bell

Sheet: /Key Matrix/

File: key_matrix.kicad_sch

Title: Key Tronic Corp. 65–01642

Size: USLetter	Date: 2023–04–24	**Rev: 2**
KiCad E.D.A. kicad 7.0.2–0		Id: 2/2