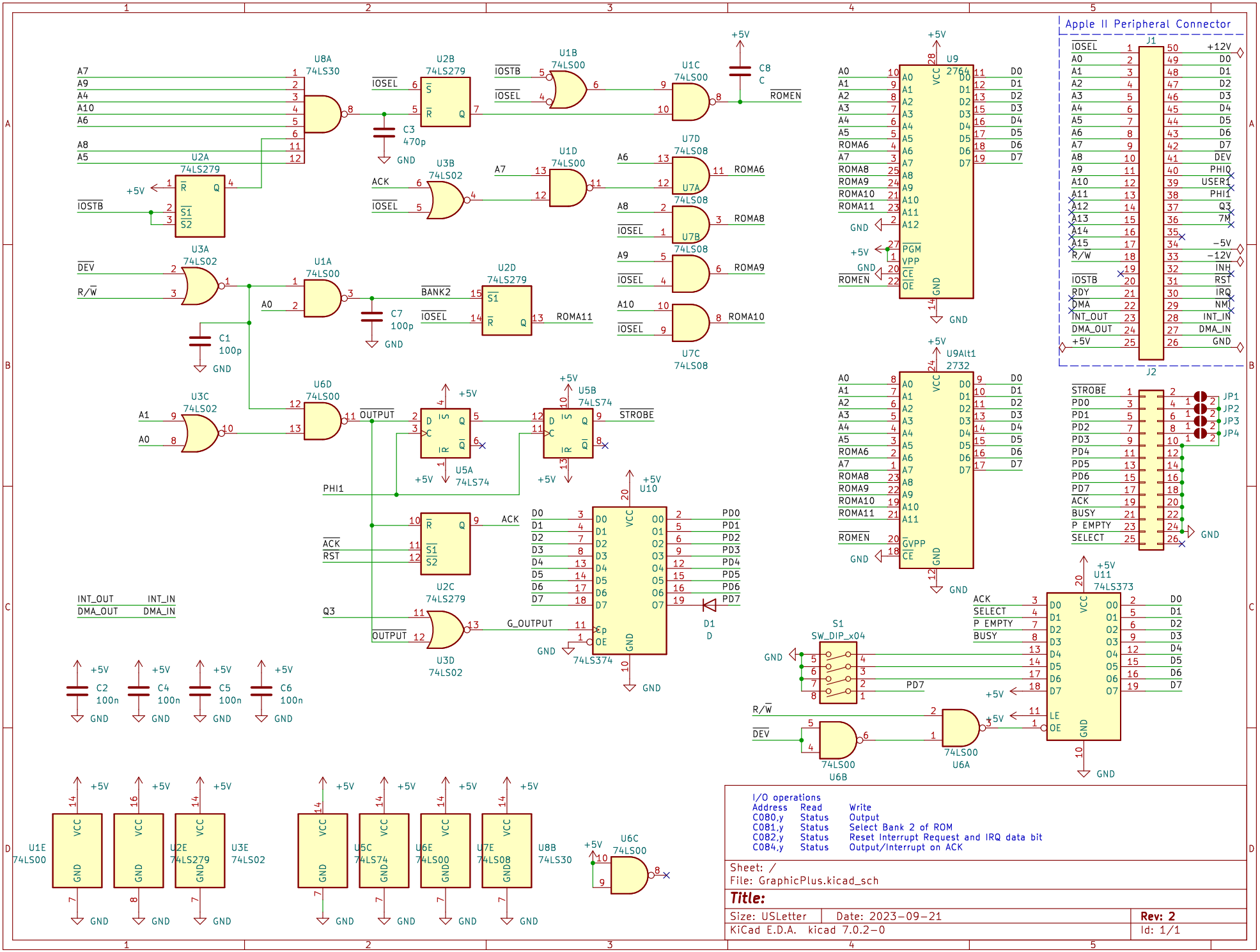
Apple II Peripheral Connector
J1
J2
U8A 74LS30
U2B 74LS279
U1B 74LS00
U1C 74LS00
U2A 74LS279
U3B 74LS02
U1D 74LS00
U7D 74LS08
U7A 74LS08
U7B 74LS08
U7C 74LS08
U3A 74LS02
U1A 74LS00
U2D 74LS279
U3C 74LS02
U6D 74LS00
U5A 74LS74
U5B 74LS74
U2C 74LS279
U3D 74LS02
U10 74LS374
U9 2764
U9Alt1 2732
U11 74LS373
S1 SW_DIP_x04
U6A 74LS00
U6B 74LS00
U6C 74LS00
U1E 74LS00
U2E 74LS279
U3E 74LS02
U5C 74LS74
U6E 74LS00
U7E 74LS08
U8B 74LS30
C1 100p
C2 100n
C3 470p
C4 100n
C5 100n
C6 100n
C7 100p
C8 C
D1 D
JP1
JP2
JP3
JP4
+5V
GND
ROMEN
IOSEL
IOSTB
ACK
RST
DEV
R/W
A0
A1
A2
A3
A4
A5
A6
A7
A8
A9
A10
A11
A12
ROMA6
ROMA8
ROMA9
ROMA10
ROMA11
BANK2
OUTPUT
PHI1
Q3
G_OUTPUT
INT_OUT
DMA_OUT
INT_IN
DMA_IN
STROBE
PD0
PD1
PD2
PD3
PD4
PD5
PD6
PD7
P EMPTY
SELECT
BUSY
+12V
-5V
-12V
INH
RST
IRQ
NMI
7M
Q3
DEV
I/O operations
Address Read Write
C080,y Status Output
C081,y Status Select Bank 2 of ROM
C082,y Status Reset Interrupt Request and IRQ data bit
C084,y Status Output/Interrupt on ACK
Sheet: /
File: GraphicPlus.kicad_sch
Title:
Size: USLetter
Date: 2023-09-21
Rev: 2
KiCad E.D.A. kicad 7.0.2-0
Id: 1/1