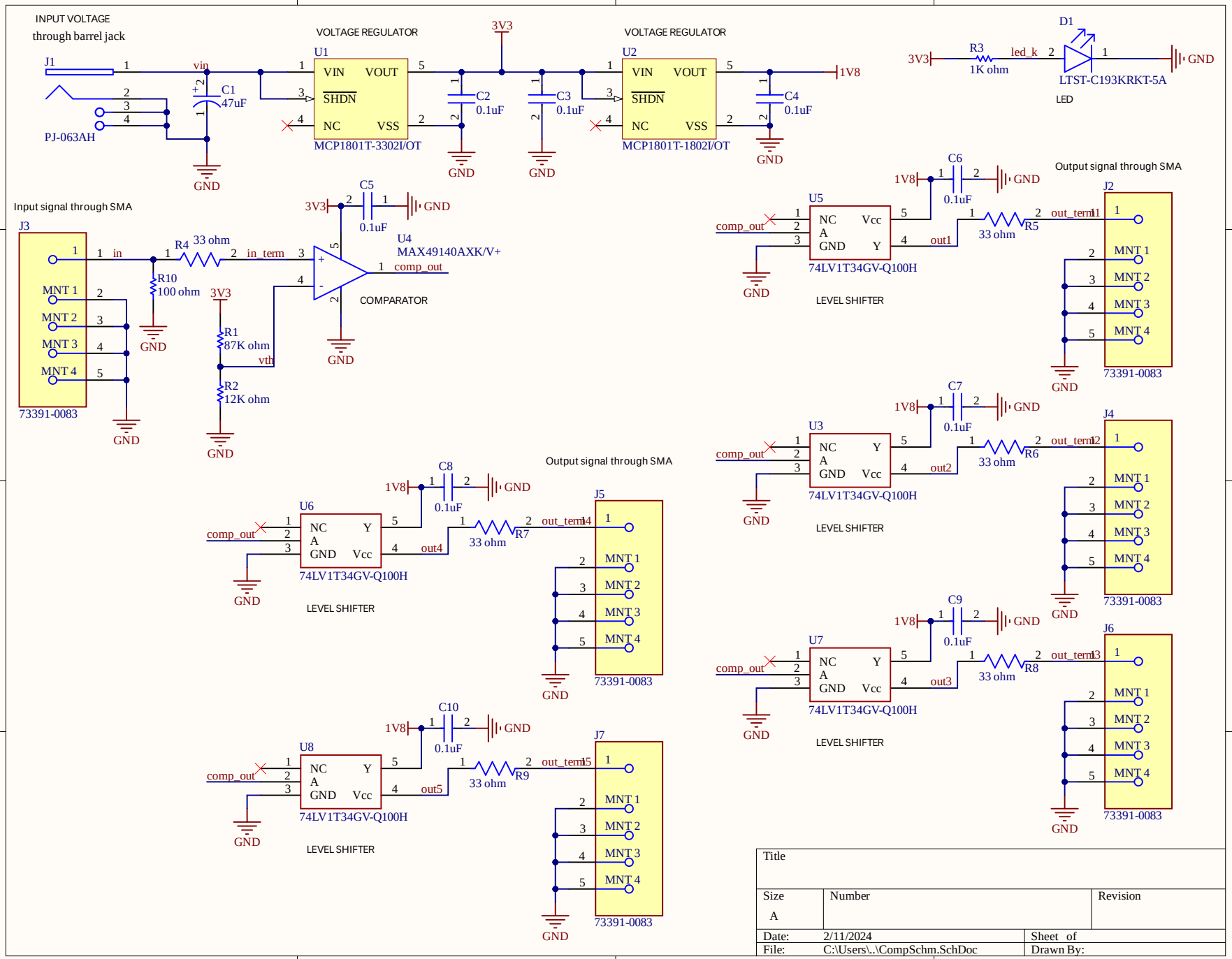

Title		
Size A	Number	Revision
Date: 2/11/2024		Sheet of
File: C:\Users\..\CompSchm.SchDoc		Drawn By: