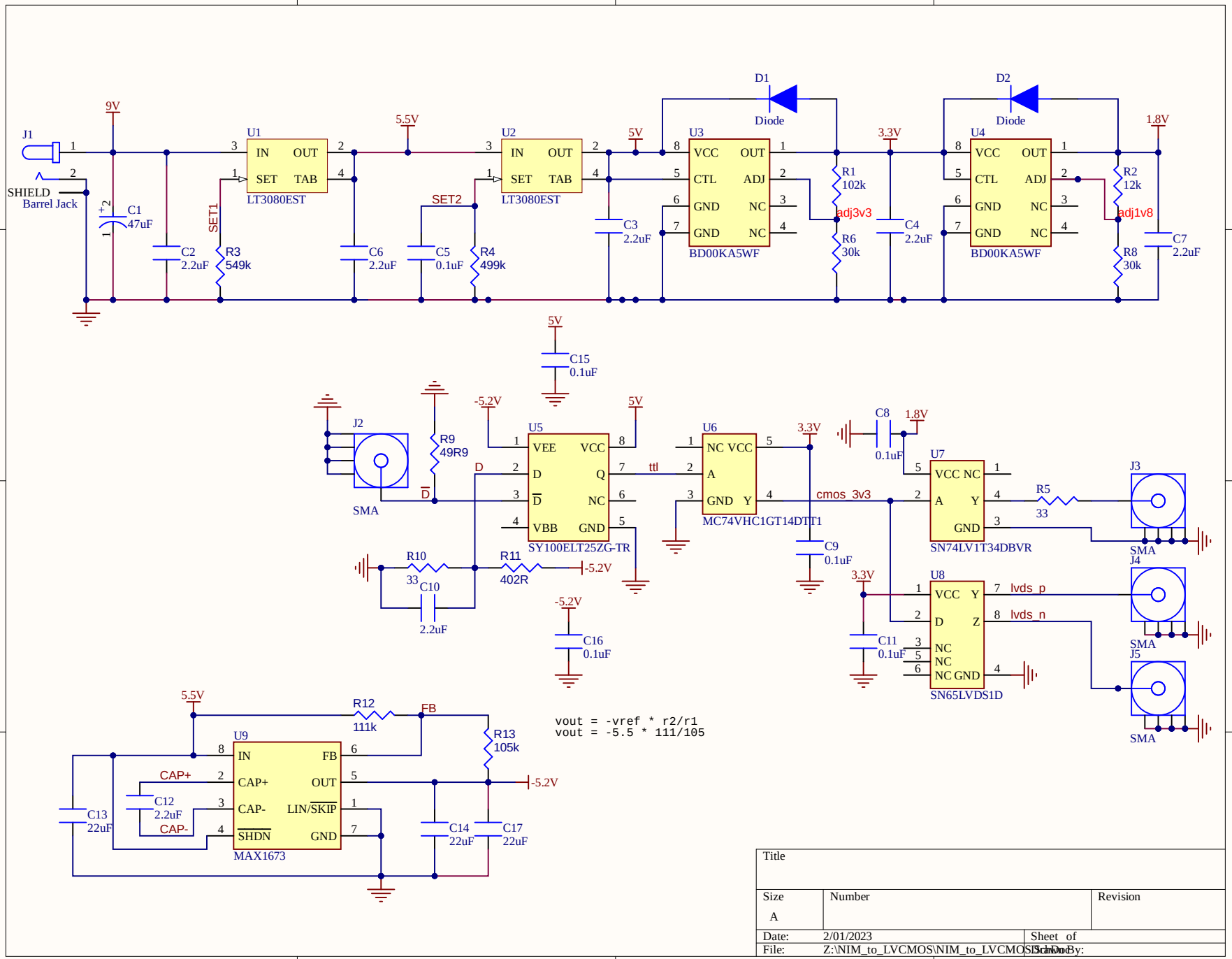

Title		
Size A	Number	Revision
Date: 2/01/2023	Sheet of	
File: Z:\NIM_to_LVCMOS\NIM_to_LVCMOS.SchDoc	Drawn By:	