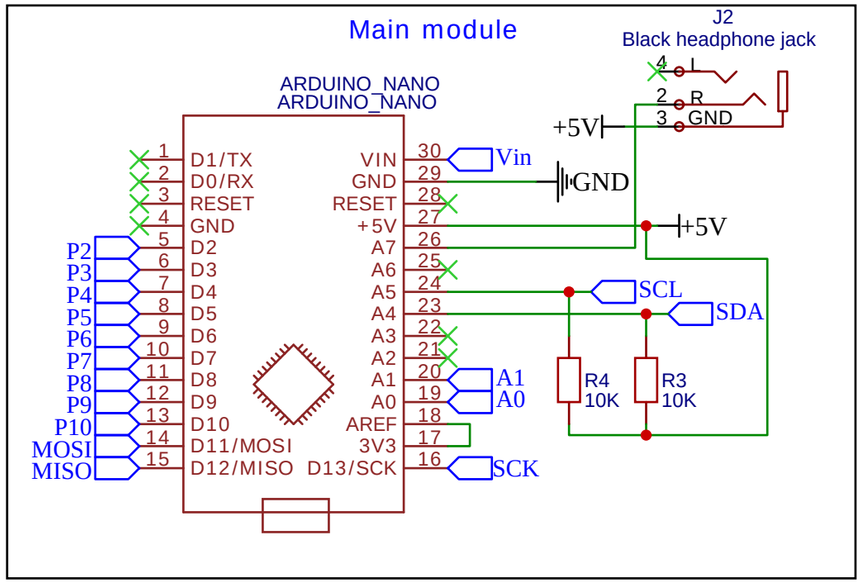

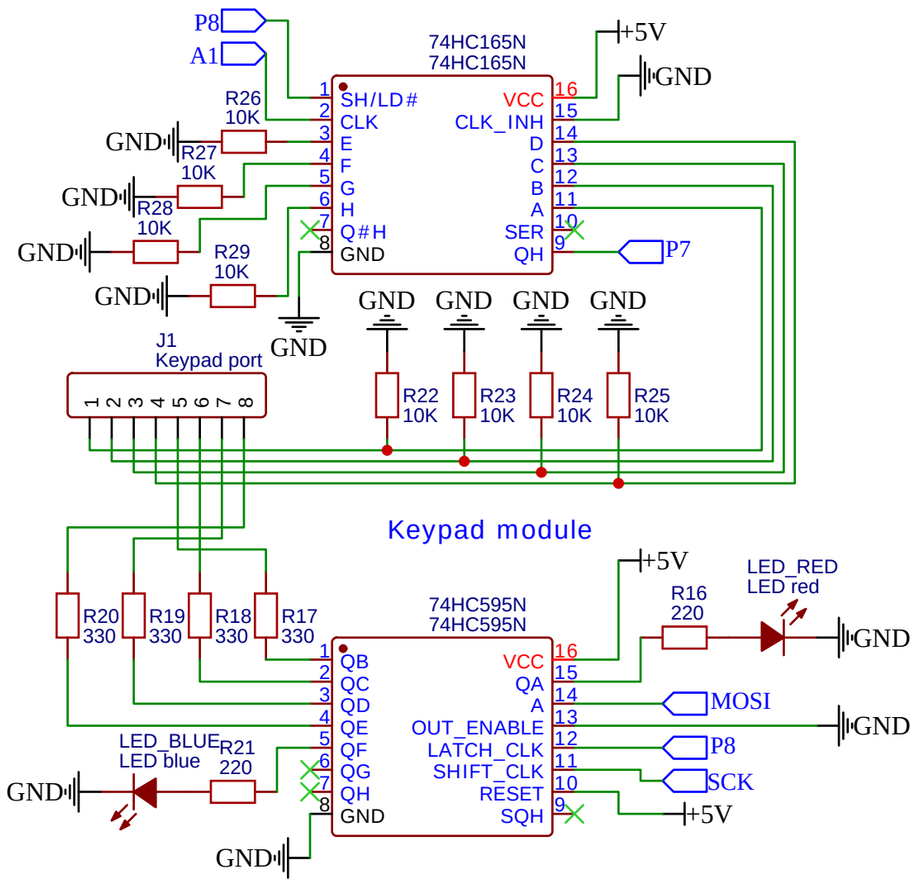

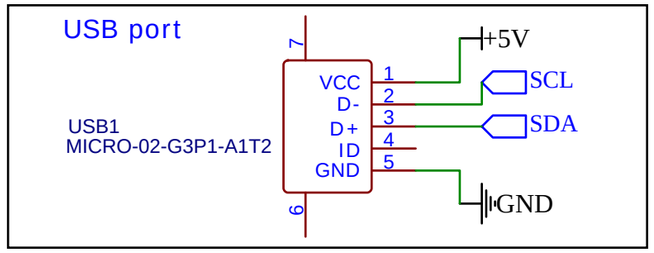

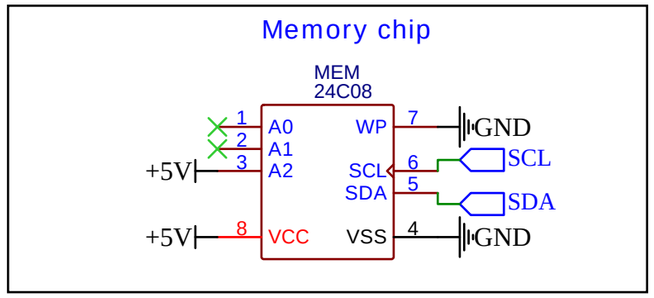

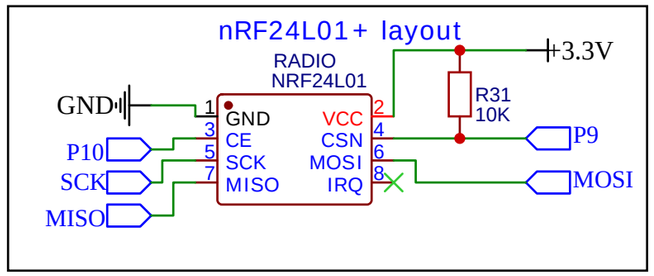

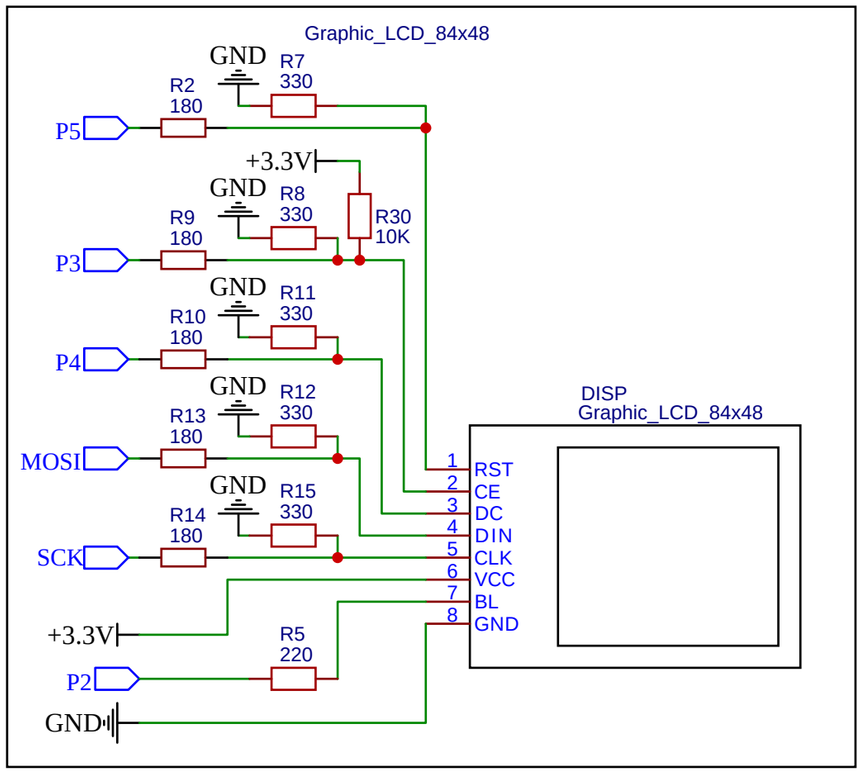

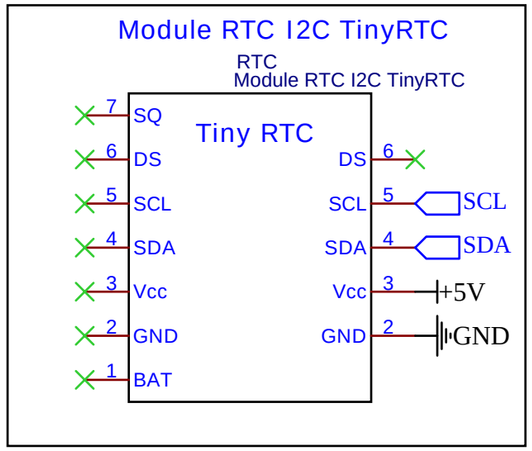

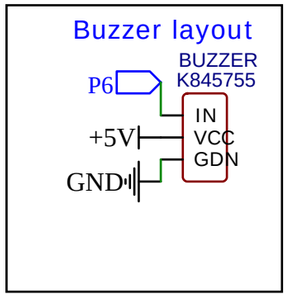

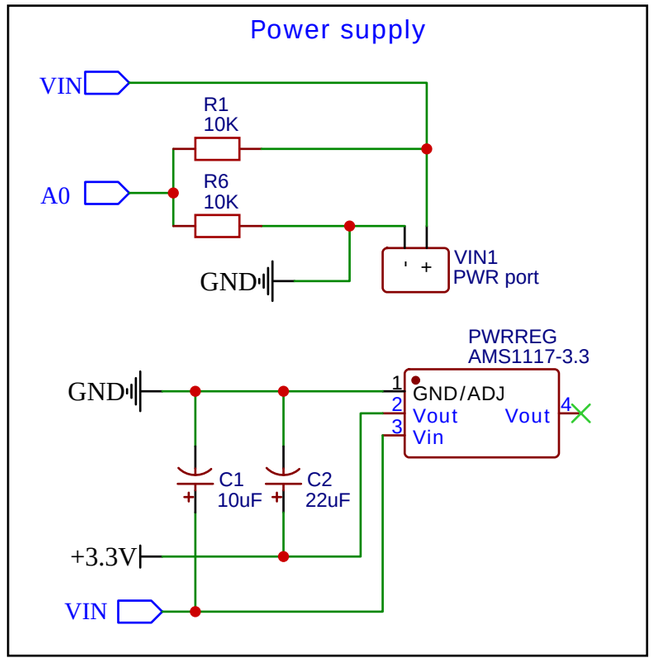

TITLE: https://github.com/bubnov-mikhail/roborally-play-pads

REV: 1.0

Company: Mihail Bubnov

Sheet: 1/1

Date: 2021-01-17

Drawn By: bubnov.mihail