J-Type Range = -180°C to 750°C
K-Type Range = -180°C to 1200°C

With a Single 5V Supply:

0V REF = 0°C to 1000°C
0.9V REF = -180°C to 820°C
1.24V REF = -248°C to 752°C

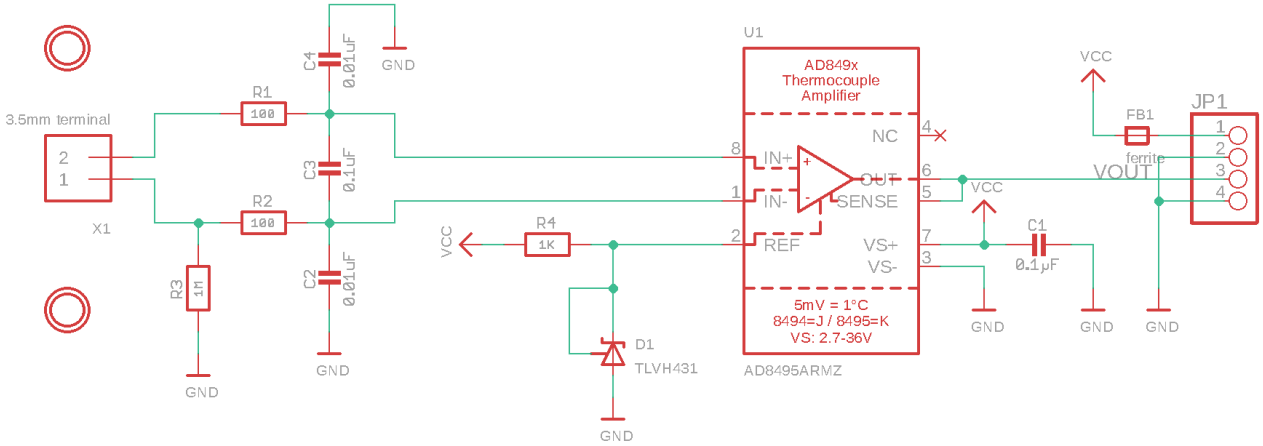

ISSUE	ADAFRUIT INDUSTRIES	© 2013
DRAWN KTOWN	TITLE	REV A
CHECKED >CHECKED	DATE 6/12/14 12:42 PM	DRG Nº >DRGNO
DATE >DATE	FILE: Adafruit AD849x_Thermo	PAGE: 1/1