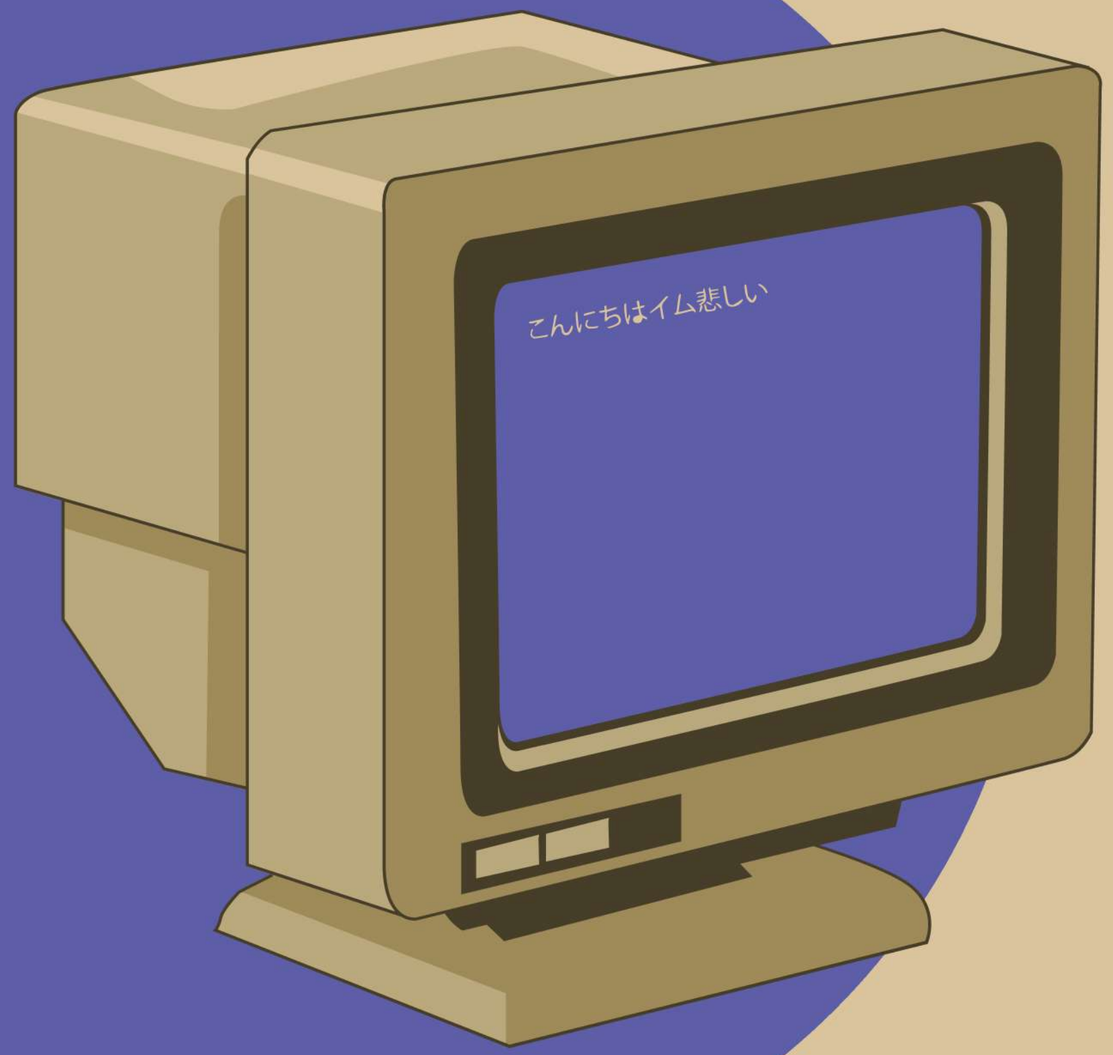

EN2091 - LABORATARY PRACTICES AND ANALOG PROJECT

ANALOG COMPUTER

TEAM NEUTRONIC

KUMARA K.B.R. 230352K

KUMARA P.K.M.P. 230353N

LENMINI B.L.W. 230375H

RANAWAKA R.A.G.K. 230527D

TEAM NEUTRONIC

INTRODUCTION

Our project demonstrates the use of op-amp circuits to perform key analog computations

- Operations:
  - Addition
  - Subtraction
  - Multiplication

- Frequency range: 1Hz – 10kHz
- Dual-channel input with adjustable gain
- Stable power supply module for clean operation

TEAM NEUTRONIC

COMPONENT SELECTION

NE553N

- HIGH SLEW RATE → HANDLES FAST-CHANGING SIGNALS EFFECTIVELY
- LOW NOISE → ENSURES CLEAN AND ACCURATE OUTPUT
- WIDE BANDWIDTH → SUITABLE FOR ANALOG MULTIPLICATION WITHIN OUR FREQUENCY RANGE
- LOW DISTORTION → IMPROVES SIGNAL ACCURACY
- STABLE PERFORMANCE FOR PRECISE ANALOG COMPUTATIONS
- DUAL OPAMP CONFIGURATION - COMPACT,WIDE RANGE OF APPLICATIONS

- HIGH PRECISION → ENSURES ACCURATE GAIN AND OUTPUT VALUES
- MINIMIZES ERRORS IN ANALOG COMPUTATIONS
- IMPROVES CIRCUIT STABILITY

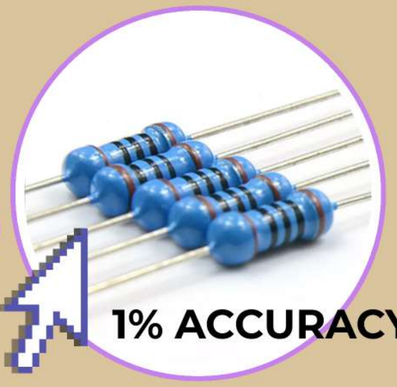

1% ACCURACY RESISTORS

- FAST SWITCHING SPEED → SUITABLE FOR HIGH-FREQUENCY SIGNALS
- LOW FORWARD VOLTAGE DROP → ENSURES ACCURATE LOGARITHMIC RESPONSE
- GOOD TEMPERATURE STABILITY → MAINTAINS CIRCUIT PRECISION
- SMALL SIGNAL DIODE → IDEAL FOR ANALOG COMPUTATION CIRCUITS
- EASILY AVAILABLE AND LOW COST

IN4148

SIMULATION

TEAM NEUTRONIC

ADDER

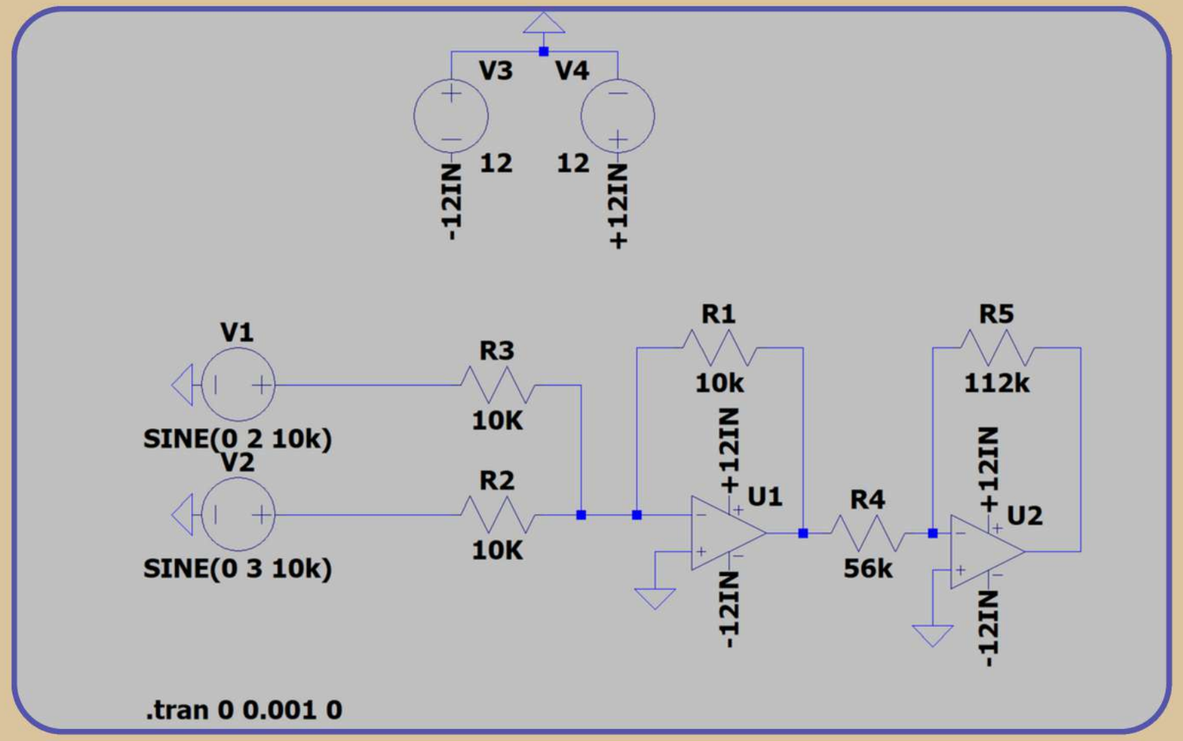

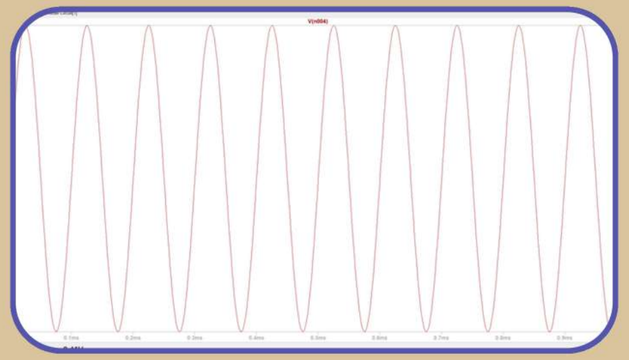

SUBTRACTOR

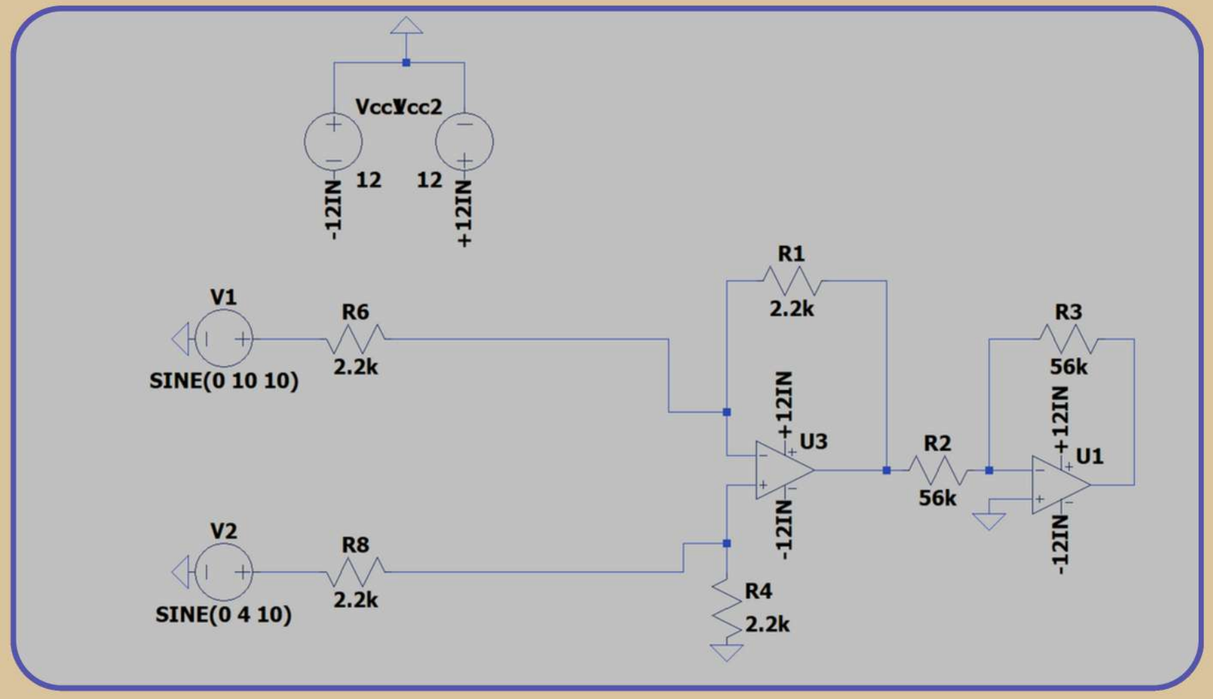

TEAM NEUTRONIC

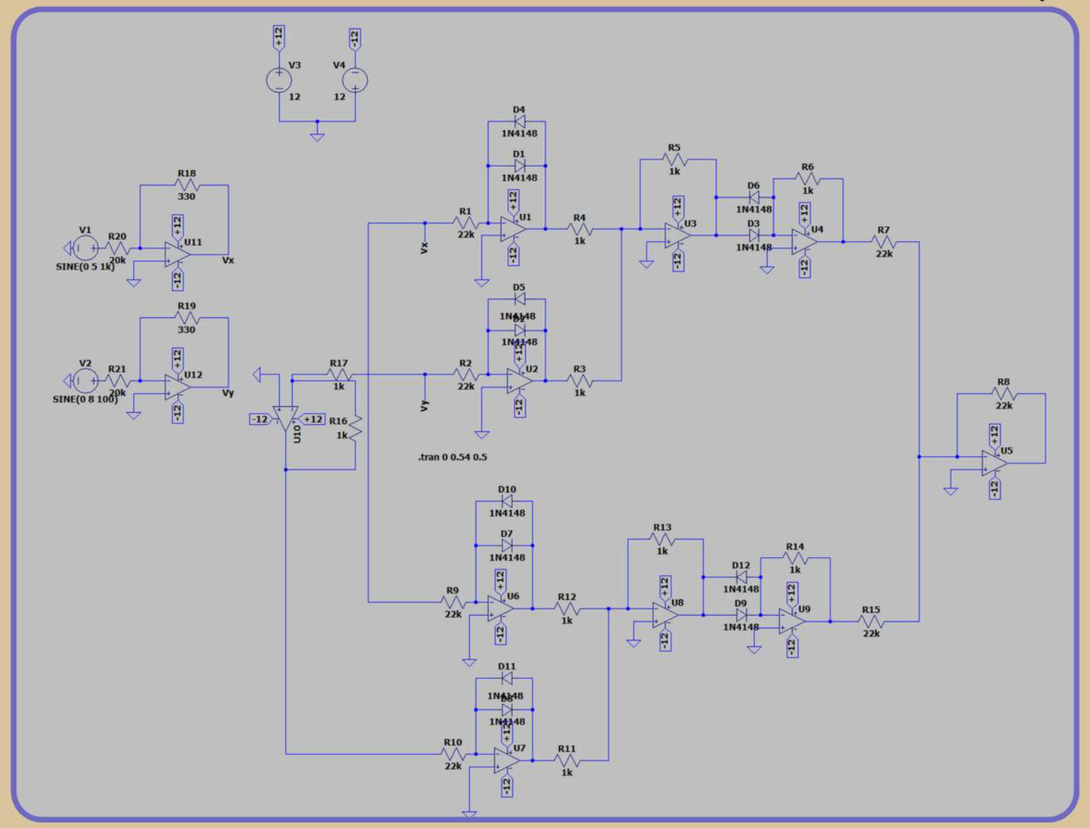

MULTIPLIER

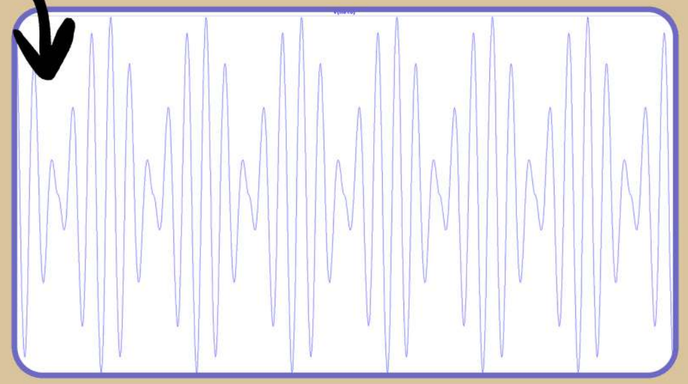

POWER SUPLLY UNIT

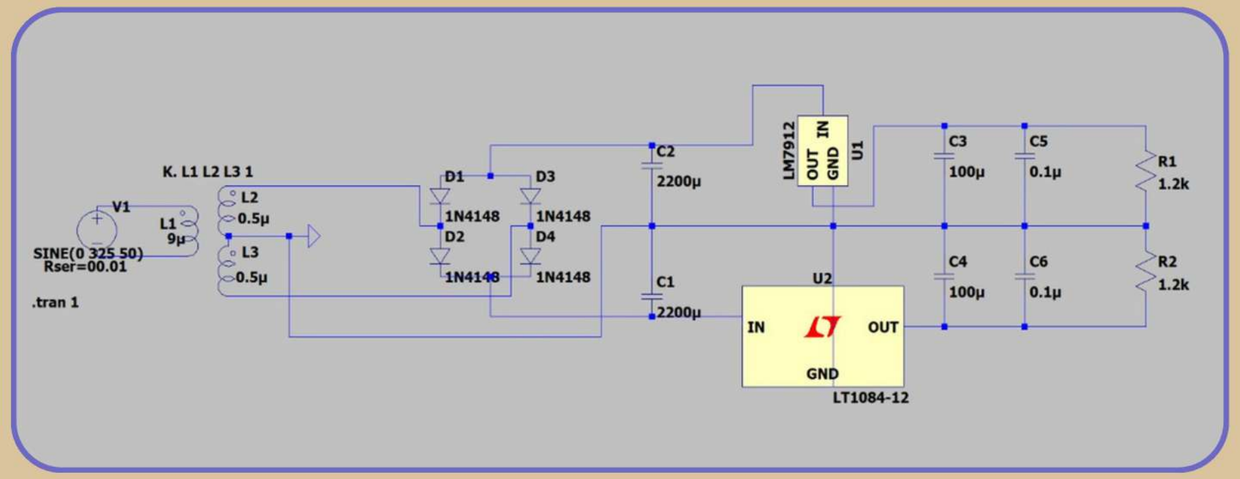

SCHEMATIC DESIGNS

TEAM NEUTRONIC

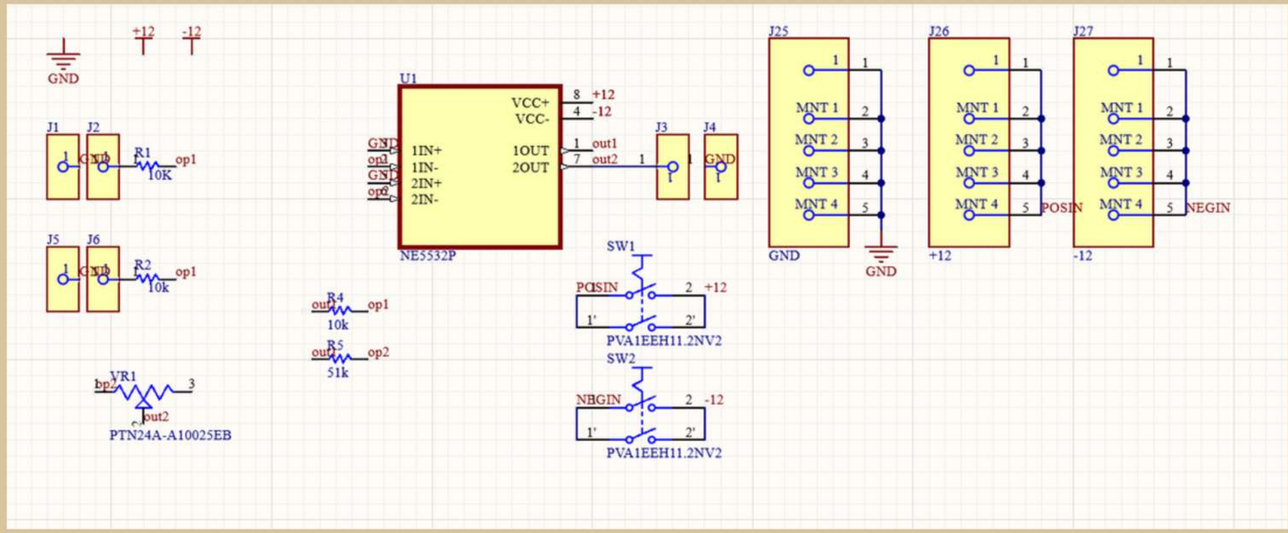

ADDER

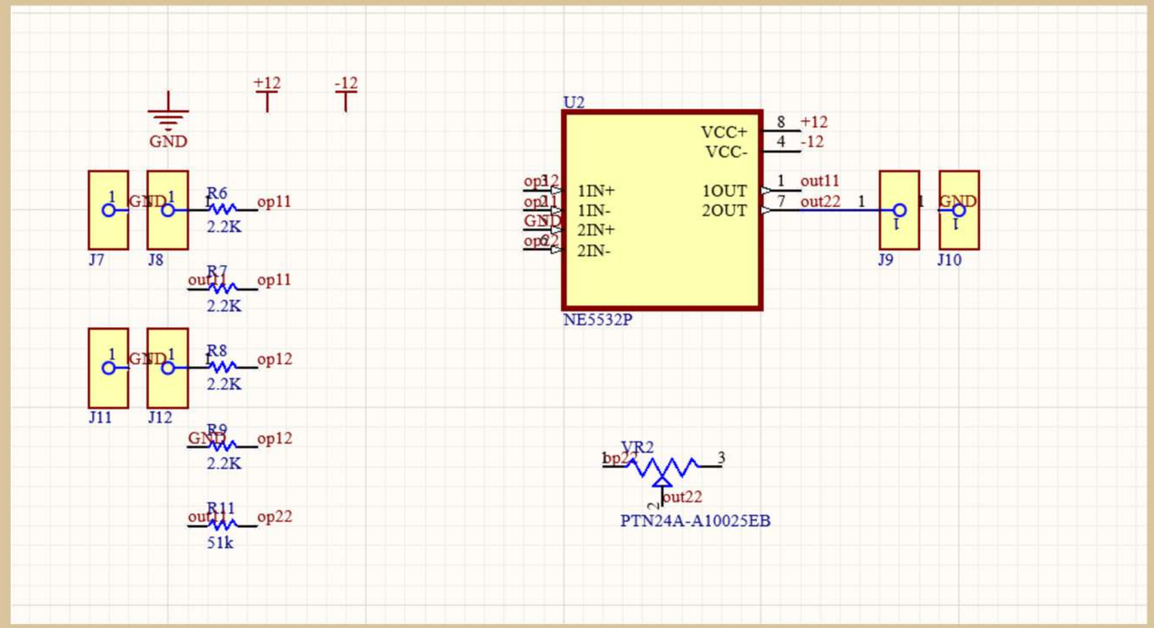

SUBTRACTOR

TEAM NEUTRONIC

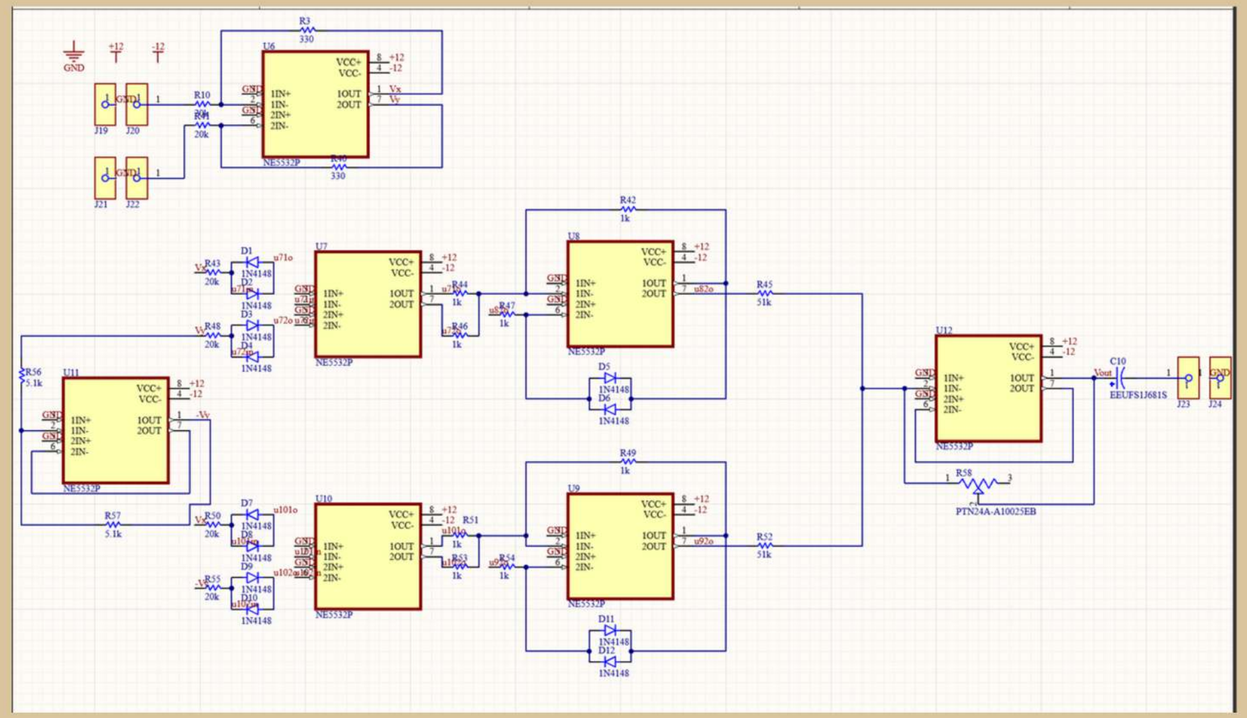

MULTIPLIER

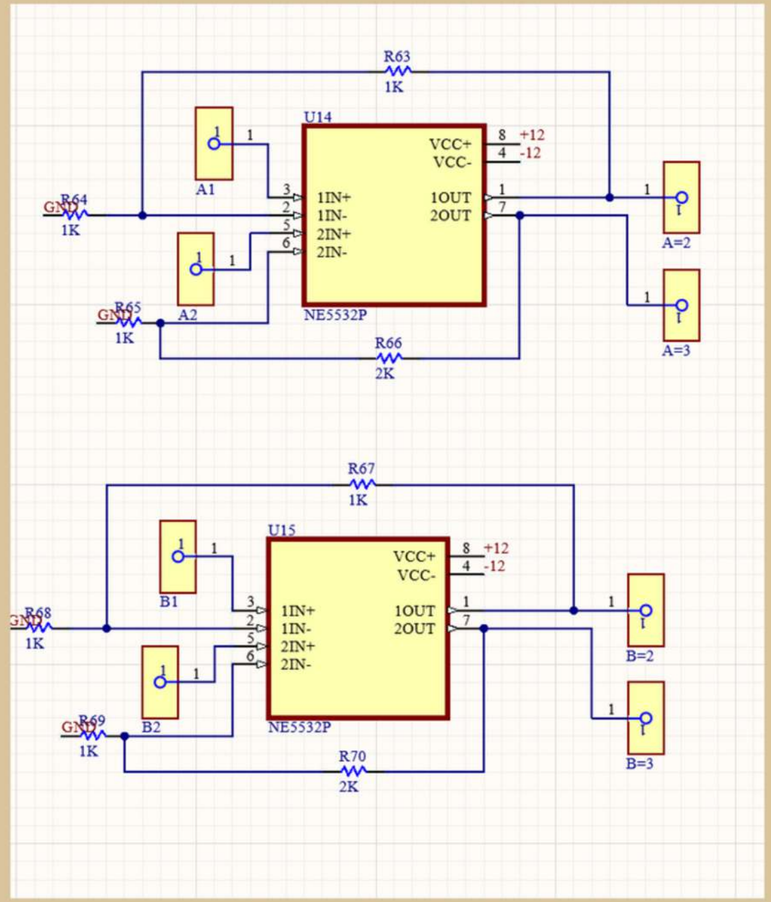

GAIN AMPLIFIERS

INSTRUMENTATION DIFFERENTIATOR

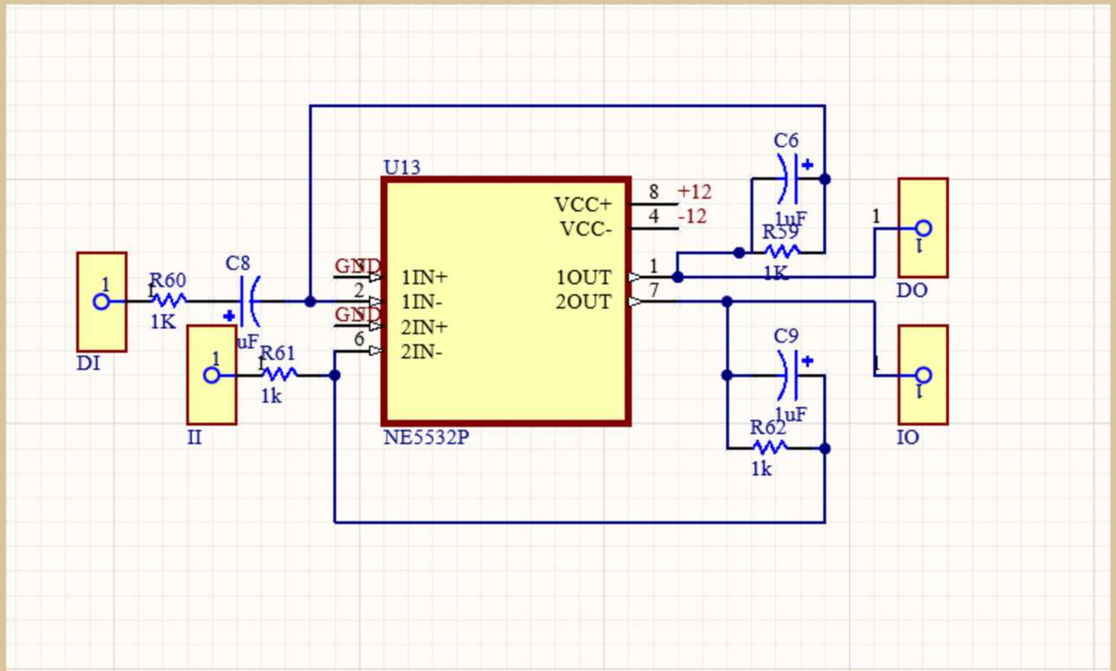

POWER SUPPLY

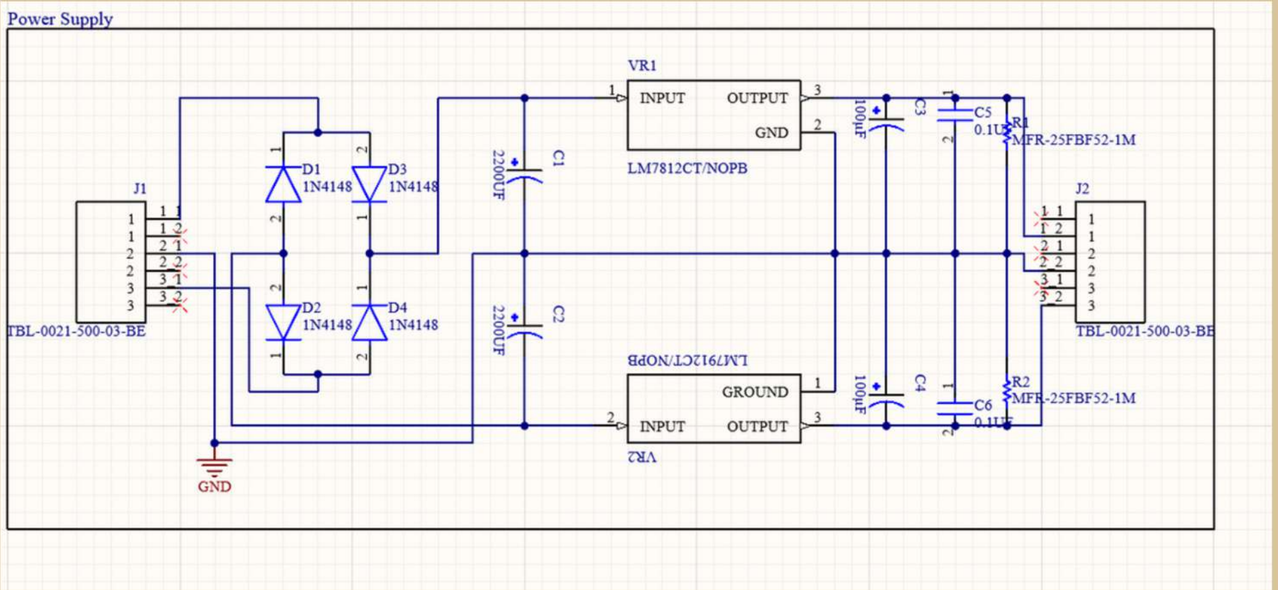

PCB DESIGN

TEAM NEUTRONIC

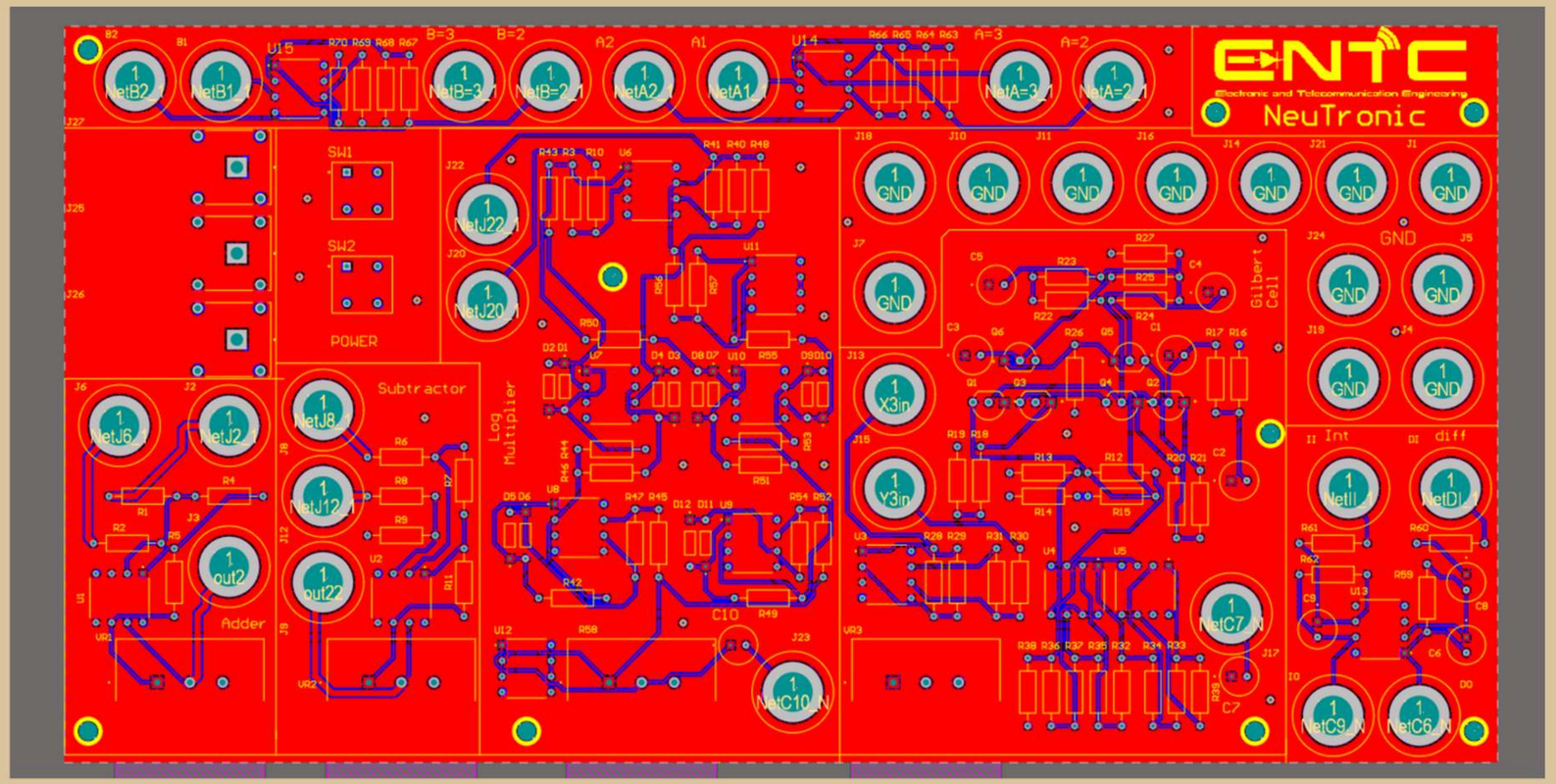

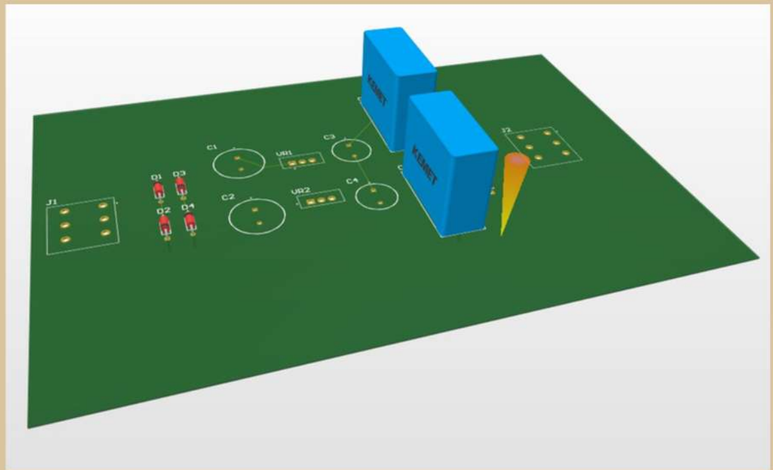

POWER SUPPLY

ENCLOSURE DESIGN

ENCLOSURE OF ANALOG COMPUTER

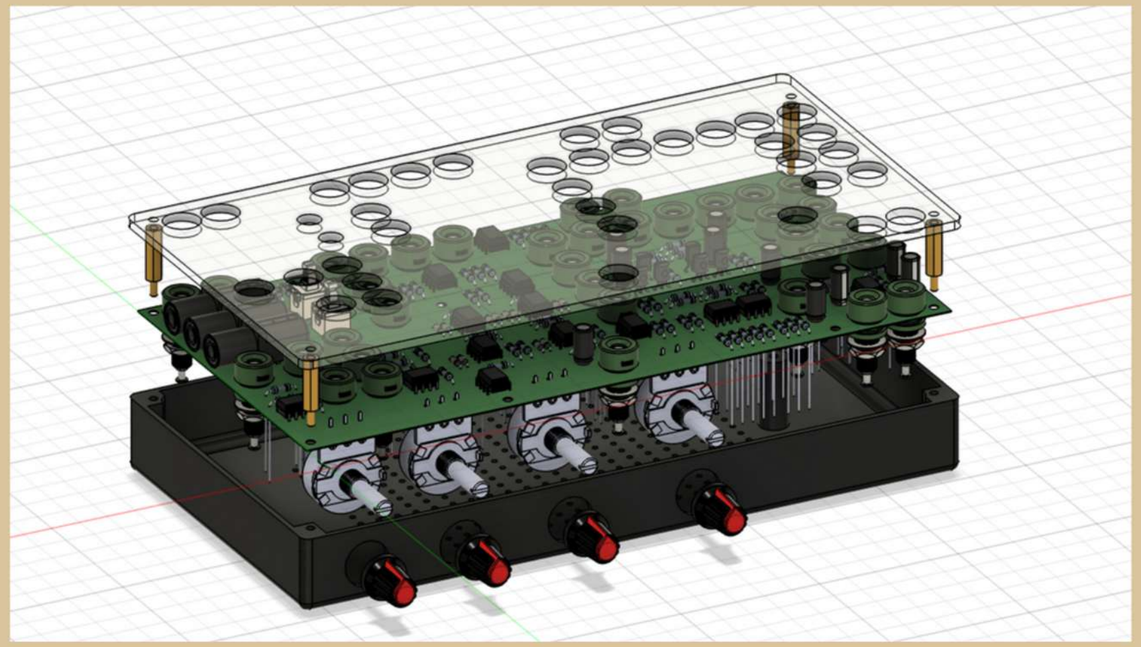

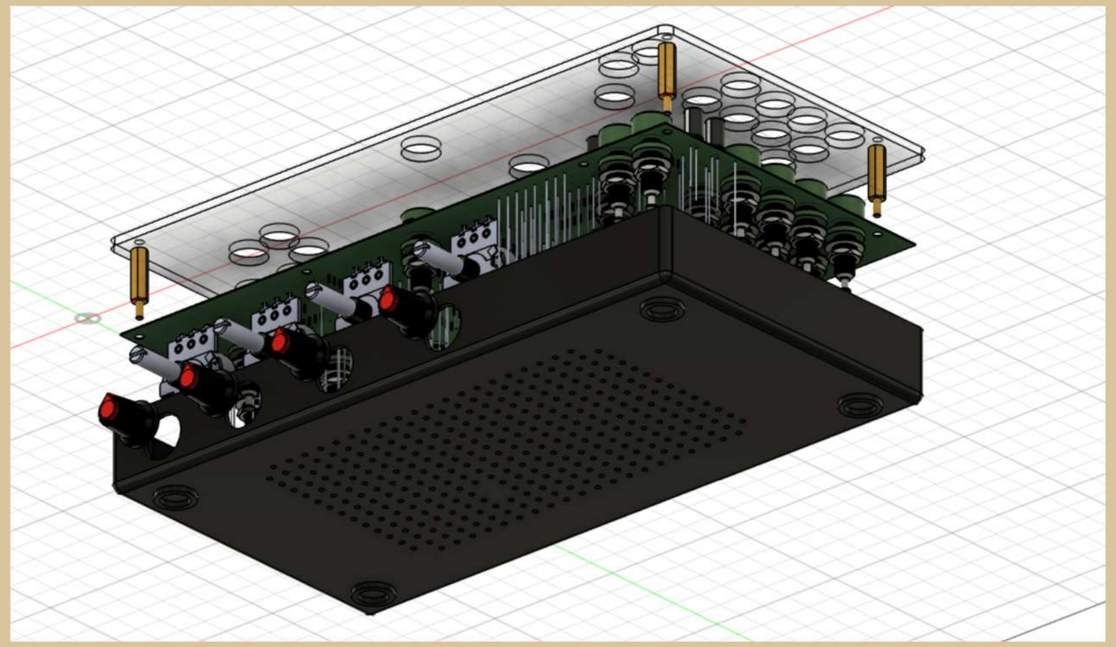

ENCLOSURE OF POWER SUPPLY UNIT

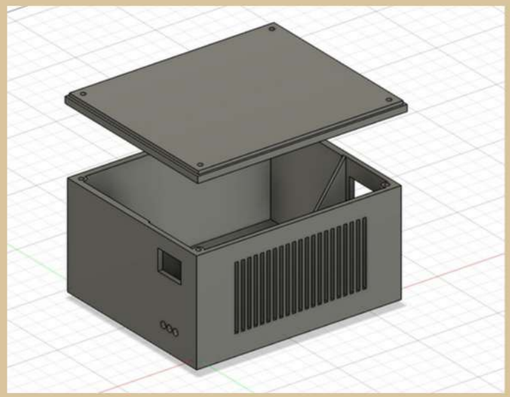

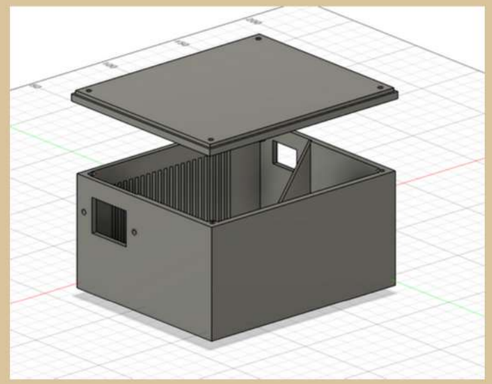

FINAL PRODUCT

TEAM NEUTRONIC

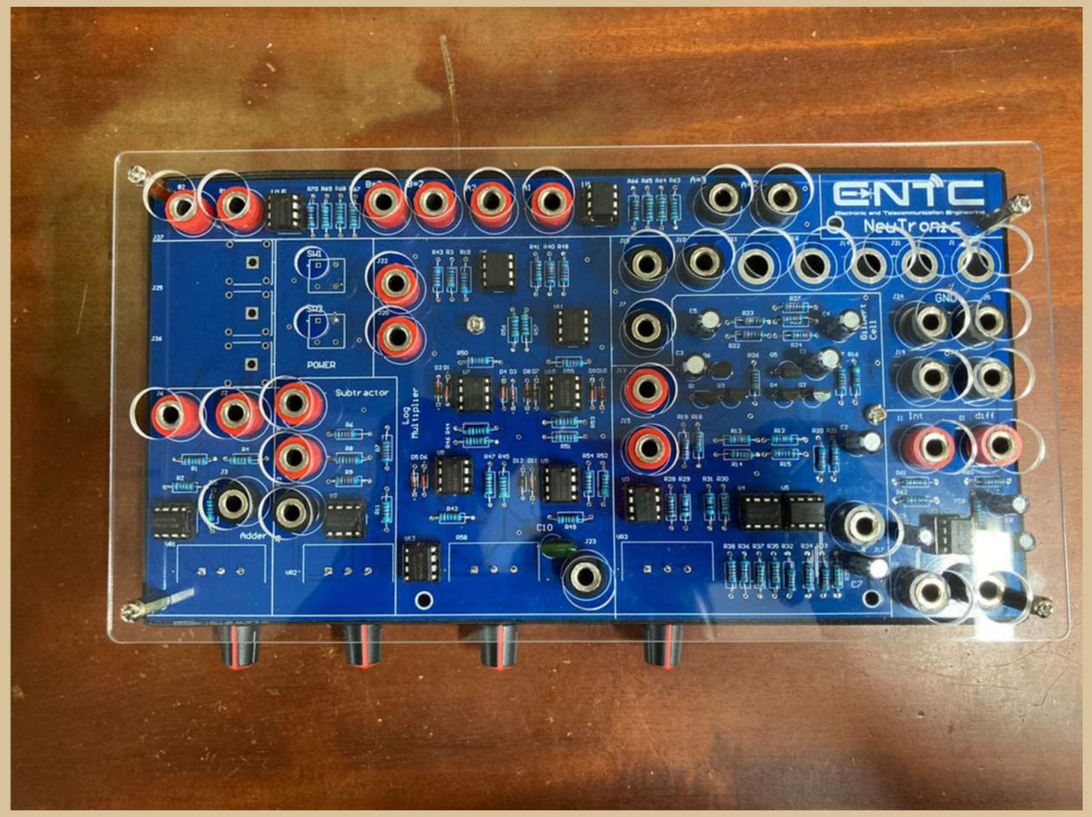

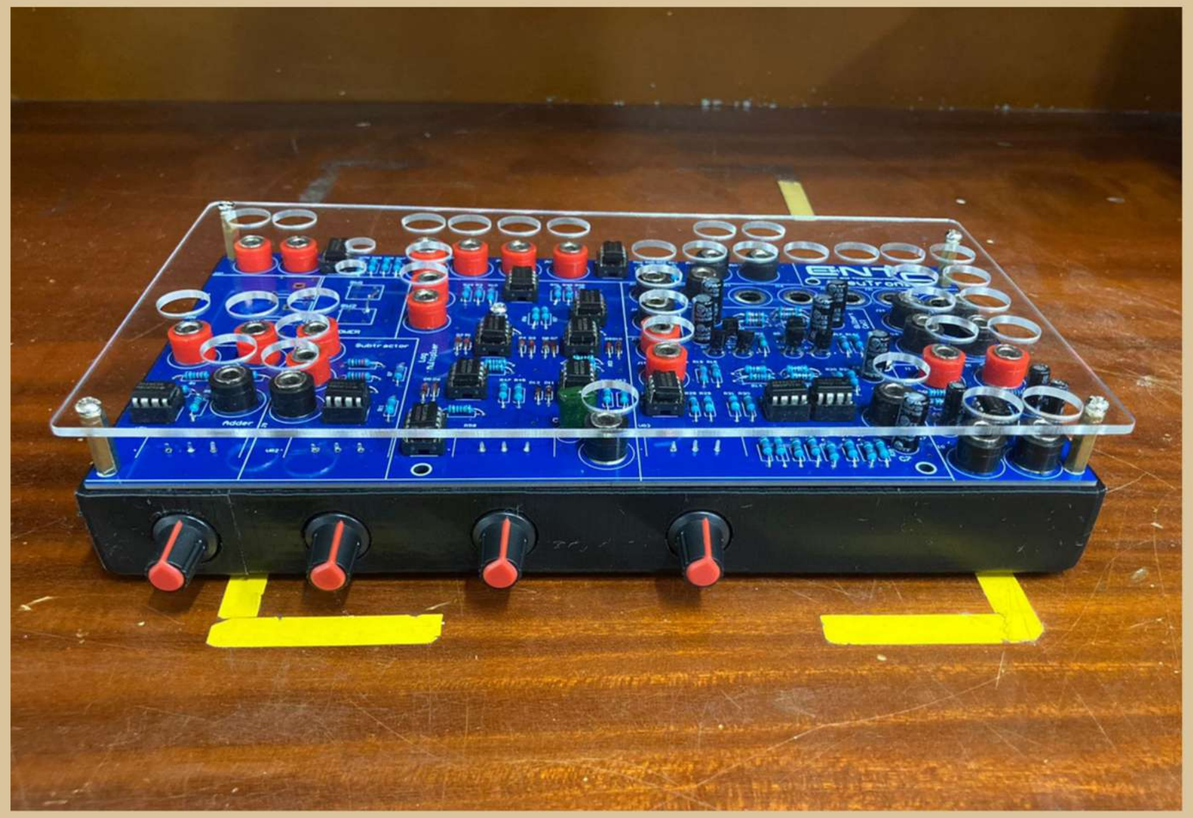

TEAM NEUTRONICS

TASK ALLOCATION

KUMARA K.B.R. 230352K

- PCB DESIGN FOR ADDER, SUBTRACTOR AND MULTIPLIERS
- GILLBERT CELL SIMULATION AND IMPLEMENTATION
- LOGARITHMIC MULTIPLIER TROUBLESHOOTING

KUMARA P.K.M.P. 230353N

- ADDER, SUBTRACTOR SIMULATION
- CIRCUIT IMPLEMENTATION
- LOGARITHMIC MULTIPLIER TROUBLESHOOTING
- ENCLOSURE DESIGN

LENMINI B.L.W. 230375H

- LOGARITHMIC MULTIPLIER SIMULATION
- CIRCUIT IMPLEMENTATION
- ADDER, SUBTRACTOR TROUBLESHOOTING
- DOCUMENTATION

RANAWAKA R.A.G.K. 230527D

- POWER SUPPLY SIMULATION AND IMPLEMENTATION
- PCB DESIGN FOR POWER SUPPLY
- OVERALL TROUBLE SHOOTING

THANK YOU!

TEAM NEUTRONICS