Analog ECG Heart Monitor

Team SocketBurners

Analog Design Project

University of Moratuwa

December 13, 2025

1. Introduction
2. Circuit Stage Design
3. Simulation Results
4. Testing Results
5. PCB
6. Enclosure

1 Introduction

2 Circuit Stage Design

3 Simulation Results

4 Testing Results

5 PCB

6 Enclosure

Project Background

What is an Electrocardiogram?

- An Electrocardiogram (ECG) device is designed to display the electrical signals generated by the human cardiac system in real-time. It is a useful diagnosis tool for many cardiac conditions.
- The device takes inputs via 3 electrodes:
  - Left and Right Arm Electrodes (LA and RA), placed under the Left and Right clavicles
  - Right Leg Electrode (RL), placed on the hip or abdomen
- The differential voltage signal between LA and RA is fed into the Instrumentation Stage.
- The Common Mode signal from the input is inverted and amplified via the Right Leg Drive stage, fed back into the RL electrode.
- The device must cleanly filter out noise and interference, without distorting the biosignal input.

System Architecture

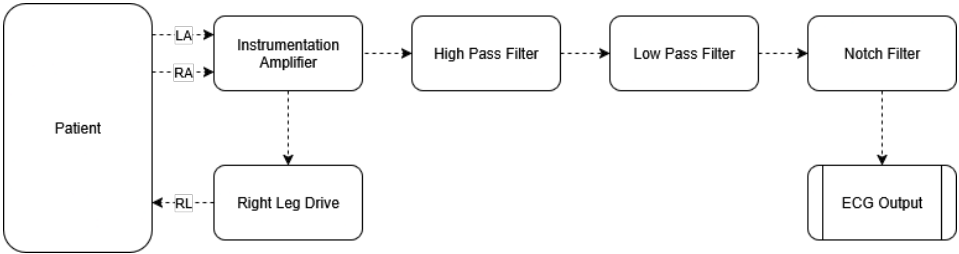

Figure 1: Proposed System Architecture

Overall Circuit Design

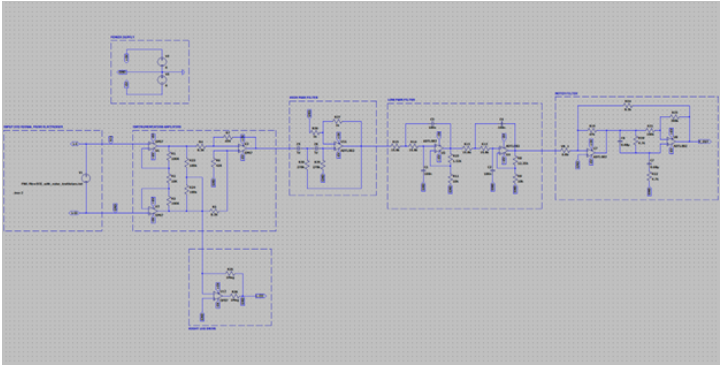

Figure 2: Full Circuit Design (LTSpice Model)

1 Introduction

2 Circuit Stage Design

3 Simulation Results

4 Testing Results

5 PCB

6 Enclosure

Instrumentation Amplifier

The instrumentation amplifier extracts the differential voltage between two electrodes (LA and RA), and rejects any common-mode signals such as noise or interference.

$$A_v = (1 + \frac{2R}{R_{\text{gain}}}) \times \frac{R_9}{R_4}$$

A potentiometer is used at R_2 to allow for adjusting the gain.

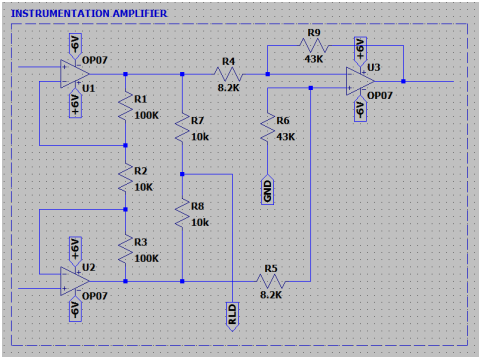

Figure 3: Instrumentation Amplifier LTSpice Model

High Pass Filter

The High Pass Filter is used to remove baseline wander and low-frequency noise from the ECG signal. A 2nd-order Butterworth configuration was used, governed by the following equations:

$$\text{Cutoff Frequency: } f_c = \frac{1}{2\pi\sqrt{R_1 R_2 C_1 C_2}} \tag{1}$$

$$\text{Gain: } A_v = 1 + \frac{R_1}{R_2} \tag{2}$$

These relationships determine the cutoff frequency and voltage gain based on resistor and capacitor values. A cutoff around 0.5 Hz was targeted to minimize baseline drift while preserving ECG signal components.

High Pass Filter Parameters

Using $R_3 = R_2 = 1\,\text{k}\Omega,\ C_1 = C_2 = 1\,\mu\text{F}$

$$f_c = \frac{1}{2\pi\sqrt{R_1 R_2 C_1 C_2}}$$
$$= \frac{1}{2\pi\sqrt{270\,\text{k}\Omega \times 270\,\text{k}\Omega \times 1\,\mu\text{F} \times 1\,\mu\text{F}}}$$
$$= 0.589\,\text{Hz}$$

Using $R_1 = R_2 = 1\,\text{k}\Omega,\ C_1 = C_2 = 1\,\mu\text{F}$

$$A_v = 1 + \frac{R_1}{R_2}$$
$$= 1 + \frac{1\,\text{k}\Omega}{1\,\text{k}\Omega}$$
$$= 2$$

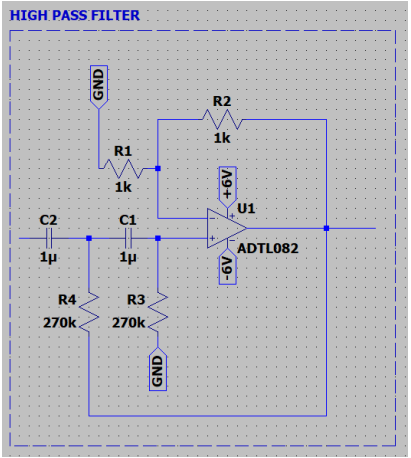

Figure 4: High Pass Filter Simulation

Low Pass Filter

The Low Pass Filter is used to remove unwanted high-frequency components caused by muscle artifacts and interference. A 4th-order Butterworth response was implemented using cascaded SallenKey stages. The governing setup equations are:

$$\text{Cutoff frequency:} \quad f_c = \frac{1}{2\pi RC}$$

$$\text{Closed-loop gain:} \quad A_v = 1 + \frac{R_1}{R_2}$$

$$\text{Q-factor:} \quad Q = \frac{1}{3 - K}$$

Low Pass Filter Parameters

Cutoff Frequency:

$$\text{Using } R = 15.8\,\text{k}\Omega,\ C = 100\,\text{nF};$$
$$f_c = \frac{1}{2\pi RC}$$
$$= \frac{1}{2\pi \times 15.8\,\text{k}\Omega \times 100\,\text{nF}}$$
$$= 100.73\,\text{Hz}\ (\approx 100\,\text{Hz})$$

Gain Constants:

$$\text{Using } R_{\text{ref}} = 10\,\text{k}\Omega;$$
$$K_1 = 1 + \frac{R_2}{R_{\text{ref}}} = 1 + \frac{1.52\,\text{k}\Omega}{10\,\text{k}\Omega} = 1.152$$
$$K_2 = 1 + \frac{R_1}{R_{\text{ref}}} = 1 + \frac{12.35\,\text{k}\Omega}{10\,\text{k}\Omega} = 2.235$$

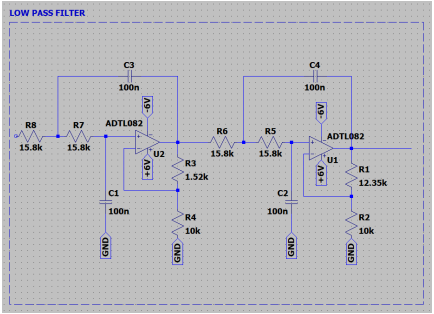

Figure 5: Low-Pass Filter Simulation.

Low Pass Filter Parameters

Using $Q = \frac{1}{3-K}$,

$$Q_1 = \frac{1}{3-1.152} = 0.5411$$

$$Q_2 = \frac{1}{3-2.235} = 1.307$$

Table 1: Standard K-Values for Butterworth Filters

Order	K
2	1.586
4	1.152, 2.235
6	1.068, 1.586, 2.483
8	1.038, 1.337, 1.889, 2.610

Notch Filter

The Notch Filter is used to filter out the 50 Hz (or 60 Hz) mains interference and improve ECG SNR. A WienRobinson topology was chosen. The governing equations are:

$$\text{Cutoff frequency:} \quad f_c = \frac{1}{2\pi RC} \tag{3}$$

$$\text{Q-factor:} \quad Q = \frac{1}{3}\left(1 + \frac{R_1}{R_2}\right) \tag{4}$$

$$\text{Gain:} \quad A_v = -\frac{R_1}{R_2} \cdot \frac{1}{3Q} \tag{5}$$

Notch Filter Parameters

Using $R = 4.7\,\mathrm{k\Omega},\ C = 0.68\,\mu\mathrm{F}$

$$f_c = \frac{1}{2\pi RC} = \frac{1}{2\pi \times 4.7\,\mathrm{k\Omega} \times 0.68\,\mathrm{tF}}$$
$$= 49.8\,\mathrm{Hz}$$

Using $R_1 = 47\,\mathrm{k\Omega},\ R2 = 8.2\,\mathrm{k\Omega}$

$$Q = \frac{1}{3}\left(1 + \frac{R_1}{R_2}\right) = \frac{1}{3}\left(1 + \frac{47\,\mathrm{k\Omega}}{8.2\,\mathrm{k\Omega}}\right)$$
$$= 2.244$$

Notch Filter Parameters

Using $R_1 = 47\,\text{k}\Omega,\ R_2 = 6.8\,\text{k}\Omega,\ Q = \frac{2}{3}$

$$A_v = -\frac{R_1}{R_2} \times \frac{1}{3Q}$$
$$= -\frac{47\,\text{k}\Omega}{6.8\,\text{k}\Omega} \times \frac{1}{3 \times 2.244}$$
$$= -1.02$$

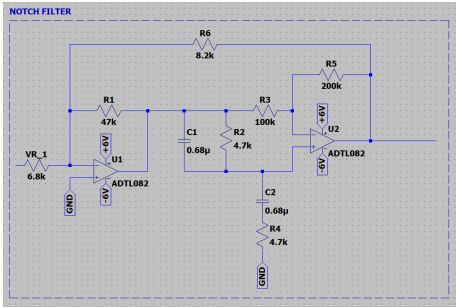

Figure 6: Notch Filter Simulation.

Right Leg Drive

The Right Leg Drive (RLD) circuit senses the common-mode interference on the instrumentation amplifier inputs and inverts it before feeding it back into the body through the right leg electrode.

This feedback process effectively cancels out common-mode noise, thereby improving the Common-Mode Rejection Ratio (CMRR) of the ECG front-end.

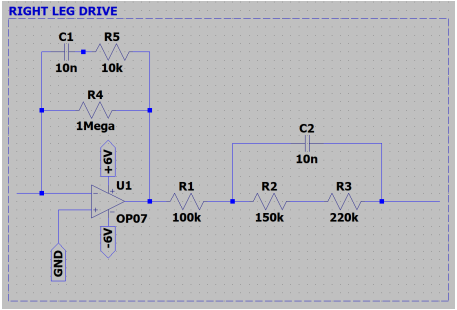

Figure 7: Right Leg Drive Simulation

Power Supply

The operational amplifiers require a split-rail power supply, generated via a simple circuit consisting of two 6 V batteries with a common ground.

Li-Ion batteries were chosen to reduce the impact of 50 Hz powerline noise on the received ECG signal.

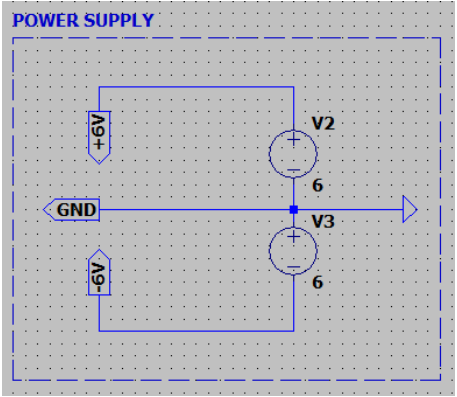

Figure 8: Power Supply Simulation

Power Switch

In order to safely operate the device when turning on the ± Power Rails, a circuit using two MOSFETs and a SPST switch was implemented. This allows for the disconnection of the two centre-tapped cells without risk of unwanted discharging or damage to the device.

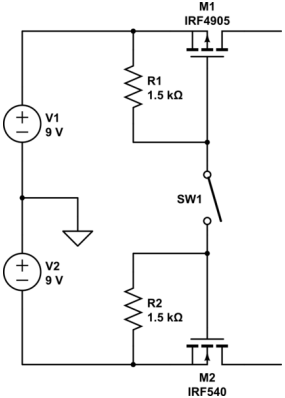

Figure 9: Transistor Switch for Split Rail Power

1 Introduction

2 Circuit Stage Design

3 Simulation Results

4 Testing Results

5 PCB

6 Enclosure

ECG Input vs Output

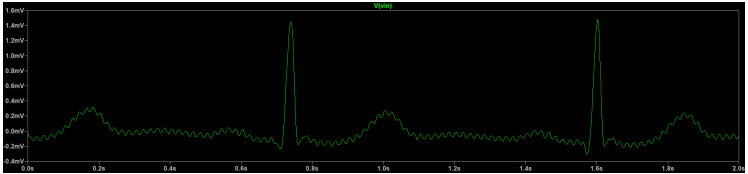

Figure 10: Simulated Input ECG Signal

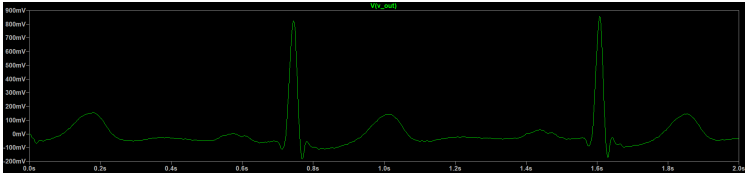

Figure 11: Output ECG Signal

Overall Circuit Frequency Response

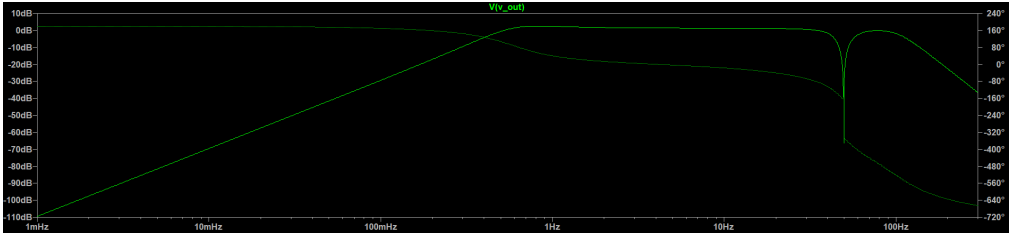

Figure 12: Overall Frequency Response

1 Introduction

2 Circuit Stage Design

3 Simulation Results

4 Testing Results

5 PCB

6 Enclosure

Results with Real ECG Signals

Figure 13: Output Signal for the Real ECG

1 Introduction

2 Circuit Stage Design

3 Simulation Results

4 Testing Results

5 PCB

6 Enclosure

Schematic Diagram

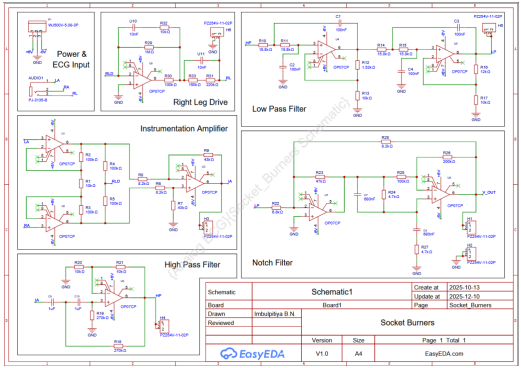

Figure 14: Schematic Layout

PCB Design

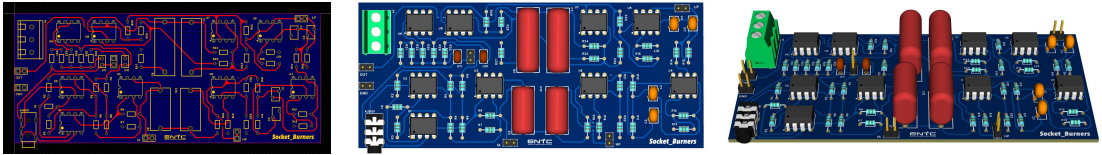

Figure 15: PCB Layout: (a) Side View, (b) Top View, and (c) Angled View

1 Introduction

2 Circuit Stage Design

3 Simulation Results

4 Testing Results

5 PCB

6 Enclosure

Enclosure 3D Model

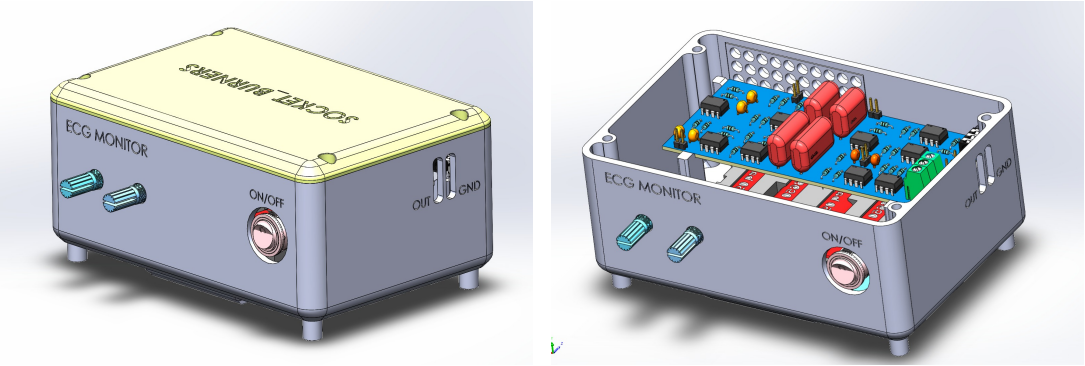

Figure 16: 3D Model of Enclosure: (a) External View; (b) Internal View

Final Assembled Device

Figure 17: Final Assembled Device: (a) External View; (b) Internal View