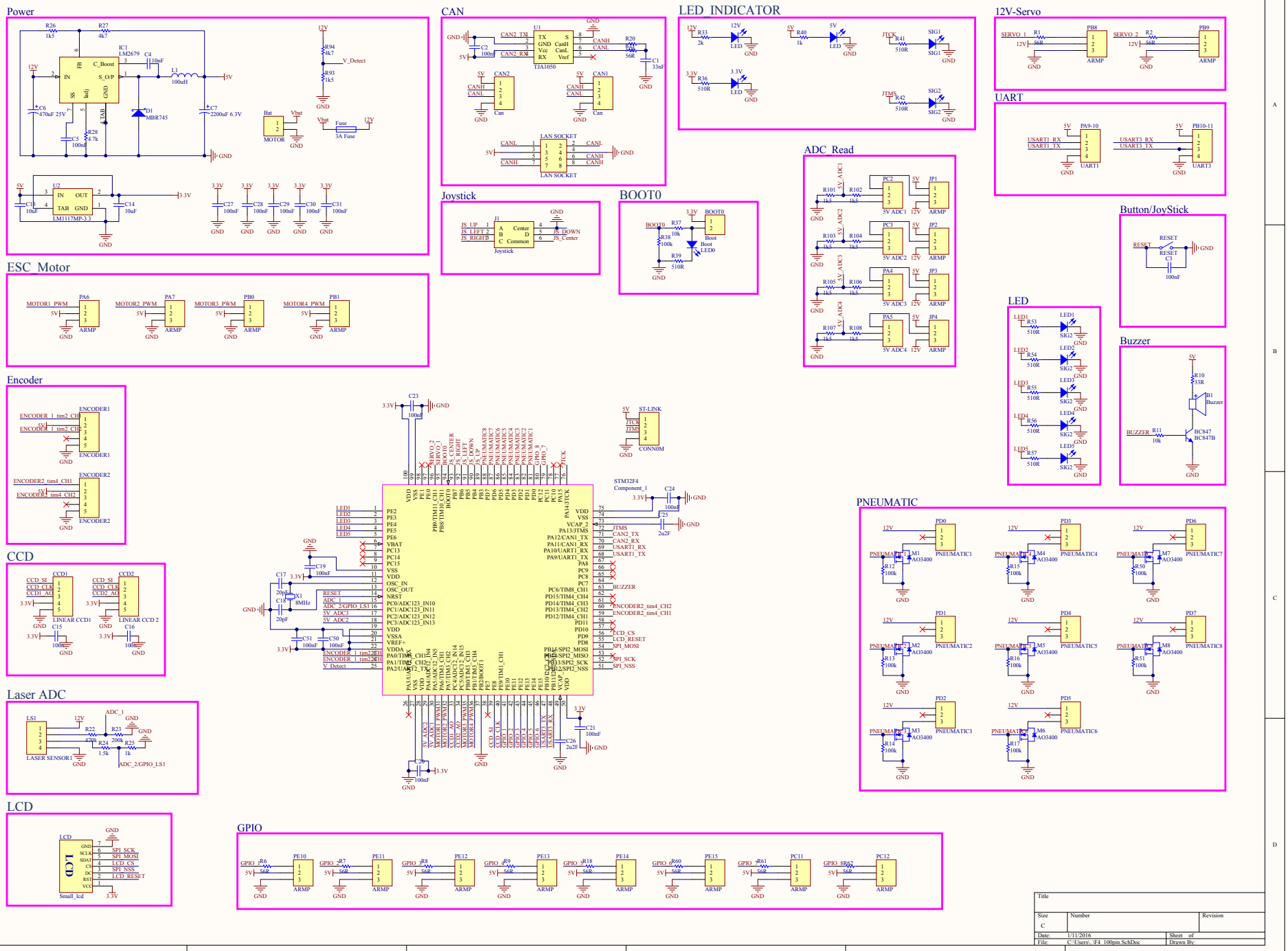
Power
CAN
LED_INDICATOR
12V-Servo
UART
Joystick
BOOT0
ADC_Read
Button/JoyStick
ESC_Motor
LED
Buzzer
Encoder
PNEUMATIC
CCD
Laser ADC
LCD
GPIO
Title
Size
Number
Revision
Date: 1/11/2016
Sheet of
File: C:\Users\..\F4_100pin.SchDoc
Drawn By:

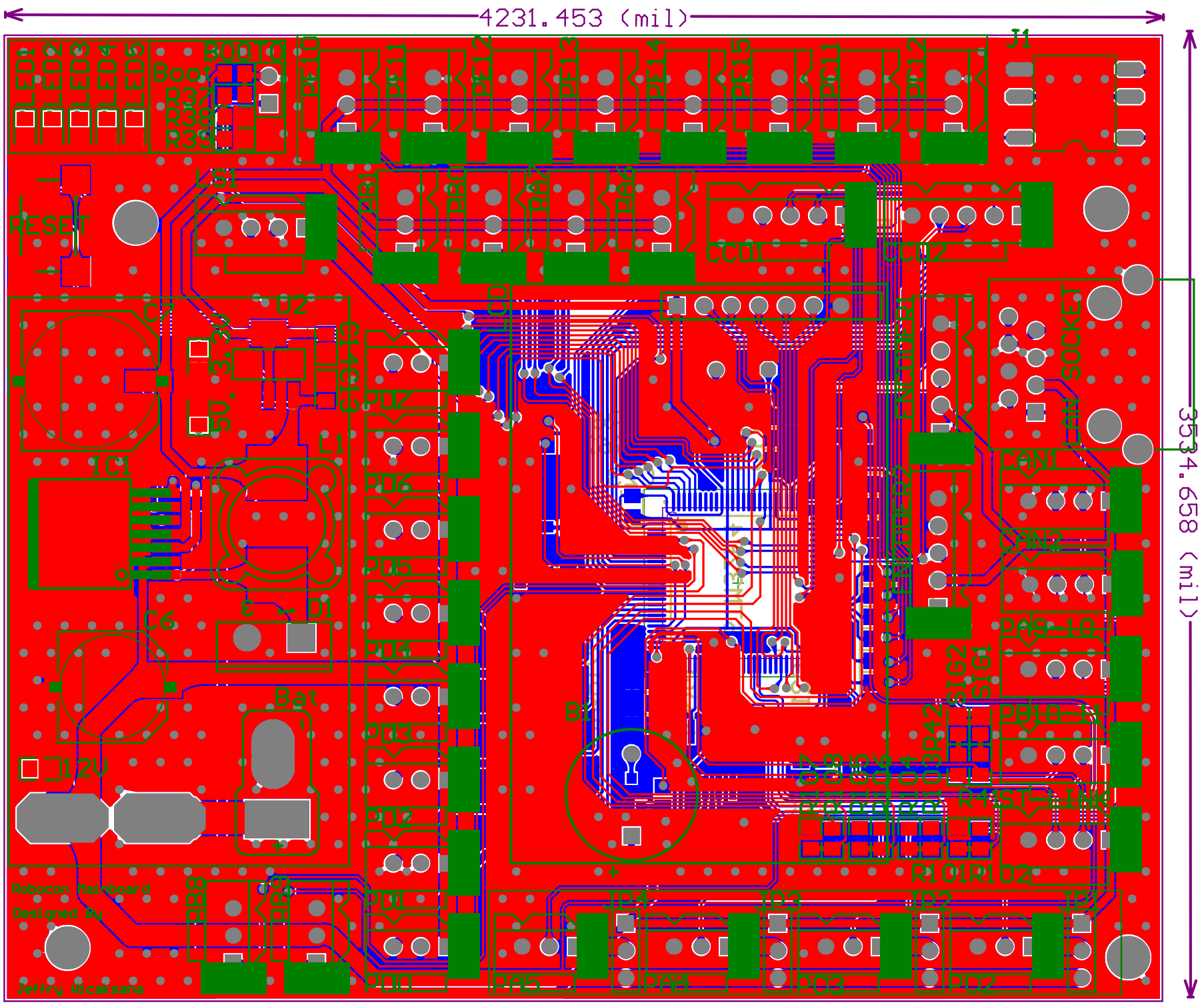
4231.453 (mil)
3534.658 (mil)
RESET
IC1
L1
D1
C6
Bat
12V
J1
CCD1
CCD2
CAN1
CAN2
SOCKET
R101
R102
Robocon Mainboard
Designed by
Jeffry Nicaksana

Comment	Description	Designator	Footprint	LibRef	Quantity
LED	Typical RED GaAs LED	3.3V, 5V	CC2012-0805	LED	2
LED	Typical RED GaAs LED	12V	CR2012-0805	LED	1
Buzzer		B1	POL_BUZZER-12.0	Buzzer	1
MOTOR	Header, 2-Pin	Bat	T-CONNECTOR(M)	Header 2	1
BC847B	NPN	BC847	SOT-23	BC847B	1
LED0	Typical RED GaAs LED	Boot	CC2012-0805	LED	1
Boot	Header, 2-Pin	BOOT0	HDR1X2	Header 2	1
33nF	Capacitor (Semiconductor SIM Model)	C1	CC2012-0805	Cap Semi	1
100nF	Capacitor (Semiconductor SIM Model)	C2, C3, C5, C19, C20, C21, C23, C24, C27, C28, C29, C30, C31, C50, C51	CC2012-0805	Cap Semi	15
10nF	Capacitor (Semiconductor SIM Model)	C4	CC2012-0805	Cap Semi	1
470uF 25V	Polarized Capacitor (Axial)	C6	SV-G	Cap Pol2	1
2200uF 6.3V	Polarized Capacitor (Axial)	C7	SV-H	Cap Pol2	1
10uF	Capacitor (Semiconductor SIM Model)	C13, C14	CC2012-0805	Cap Semi	2
100n	Capacitor (Semiconductor SIM Model)	C15, C16	CC2012-0805	Cap Semi	2
20pF	Capacitor (Semiconductor SIM Model)	C17, C18	CC2012-0805	Cap Semi	2
2u2F	Capacitor (Semiconductor SIM Model)	C25, C26	CC2012-0805	Cap Semi	2
Can	Header, 4-Pin	CAN1, CAN2	LOCKEDHDR-4	Header 4	2
LINEAR CCD1	Header, 5-Pin	CCD1	lockedHDR-5	Header 5	1
LINEAR CCD 2	Header, 5-Pin	CCD2	lockedHDR-5	Header 5	1
MBR745	Schottky Diode	D1	TO-220AC	D Schottky	1
ENCODER1	Header, 5-Pin	ENCODER1	lockedHDR-5	Header 5	1
ENCODER2	Header, 5-Pin	ENCODER2	lockedHDR-5	Header 5	1
3A Fuse	Fuse	Fuse	FUSE SOCKET	Fuse	1
LM2679	5A Step-Down Switching Mode Voltage Regulator	IC1	TO-263(7)	LM2679	1
Joystick		J1	SD_SWITCH	Joystick	1
ARMP	Header, 3-Pin	JP1, JP2, JP3, JP4	HDR1X3	Header 3	4
Inductor	Inductor	L1	MSS1260	Inductor	1
LAN SOCKET		LAN SOCKET	PCBComponent_1	Component_1	1
Small_lcd		LCD	Lcd_red	Small_lcd	1
SIG2	Typical RED GaAs LED	LED1, LED2, LED3, LED4, LED5, SIG2	CC2012-0805	LED	6
LASER SENSOR1	Header, 4-Pin	LS1	LOCKEDHDR-4	Header 4	1
AO3400	N-Channel MOSFET	M1, M2, M3, M4, M5, M6, M7, M8	SO-G3/Z3.3	AO3400	8
5V ADC3	Header, 3-Pin	PA4	LOCKEDHDR-3	Header 3	1
5V ADC4	Header, 3-Pin	PA5	LOCKEDHDR-3	Header 3	1
ARMP	Header, 3-Pin	PA6, PA7, PB0, PB1, PB8, PB9, PC11, PC12, PE10, PE11, PE12, PE13, PE14, PE15	LOCKEDHDR-3	Header 3	14
UART1	Header, 4-Pin	PA9-10	LOCKEDHDR-4	Header 4	1
UART3	Header, 4-Pin	PB10-11	LOCKEDHDR-4	Header 4	1
5V ADC1	Header, 3-Pin	PC2	LOCKEDHDR-3	Header 3	1
5V ADC2	Header, 3-Pin	PC3	LOCKEDHDR-3	Header 3	1
PNEUMATIC1	Header, 3-Pin	PD0	LOCKEDHDR-3	Header 3	1
PNEUMATIC2	Header, 3-Pin	PD1	LOCKEDHDR-3	Header 3	1
PNEUMATIC3	Header, 3-Pin	PD2	LOCKEDHDR-3	Header 3	1
PNEUMATIC4	Header, 3-Pin	PD3	LOCKEDHDR-3	Header 3	1
PNEUMATIC5	Header, 3-Pin	PD4	LOCKEDHDR-3	Header 3	1
PNEUMATIC6	Header, 3-Pin	PD5	LOCKEDHDR-3	Header 3	1
PNEUMATIC7	Header, 3-Pin	PD6	LOCKEDHDR-3	Header 3	1
PNEUMATIC8	Header, 3-Pin	PD7	LOCKEDHDR-3	Header 3	1
56R	Semiconductor Resistor	R1, R2, R6, R7, R8, R9, R18, R20, R21, R60, R61, R62	CR2012-0805	Res Semi	12
33R	Semiconductor Resistor	R10	CR2012-0805	Res Semi	1
10k	Semiconductor Resistor	R11, R37	CR2012-0805	Res Semi	2
100k	Semiconductor Resistor	R12, R13, R14, R15, R16, R17, R38, R50, R51	CR2012-0805	Res Semi	9
470k	Semiconductor Resistor	R22	CR2012-0805	Res Semi	1
200k	Semiconductor Resistor	R23	CR2012-0805	Res Semi	1
1.5k	Semiconductor Resistor	R24	CR2012-0805	Res Semi	1
1k	Semiconductor Resistor	R25, R40	CR2012-0805	Res Semi	2
1k5	Semiconductor Resistor	R26, R93, R101, R102, R103, R104, R105, R106, R107, R108	CR2012-0805	Res Semi	10
4k7	Semiconductor Resistor	R27, R94	CR2012-0805	Res Semi	2
4.7k	Semiconductor Resistor	R28	CR2012-0805	Res Semi	1
2k	Semiconductor Resistor	R33	CR2012-0805	Res Semi	1
510R	Semiconductor Resistor	R36, R39, R41, R42, R53, R54, R55, R56, R57	CR2012-0805	Res Semi	9
RESET	Single-Pole, Single-Throw Switch	RESET	PUSH SWITCH	SW-SPST	1
SIG1	Typical RED GaAs LED	SIG1	CC2012-0805	LED	1
CONN0M	Header, 4-Pin	ST-LINK	LOCKEDHDR-4	Header 4	1
Component_1		STM32F4	LQFP100_N	Component_1	1
TJA1050		U1	SO-8	DJA1050	1
LM1117MP-3.3	800mA Low-Dropout Linear Regulator	U2	MP04A_N	LM1117MP-3.3	1
8MHz	Crystal Oscillator	X1	BCY-W2/E4.7	XTAL	1