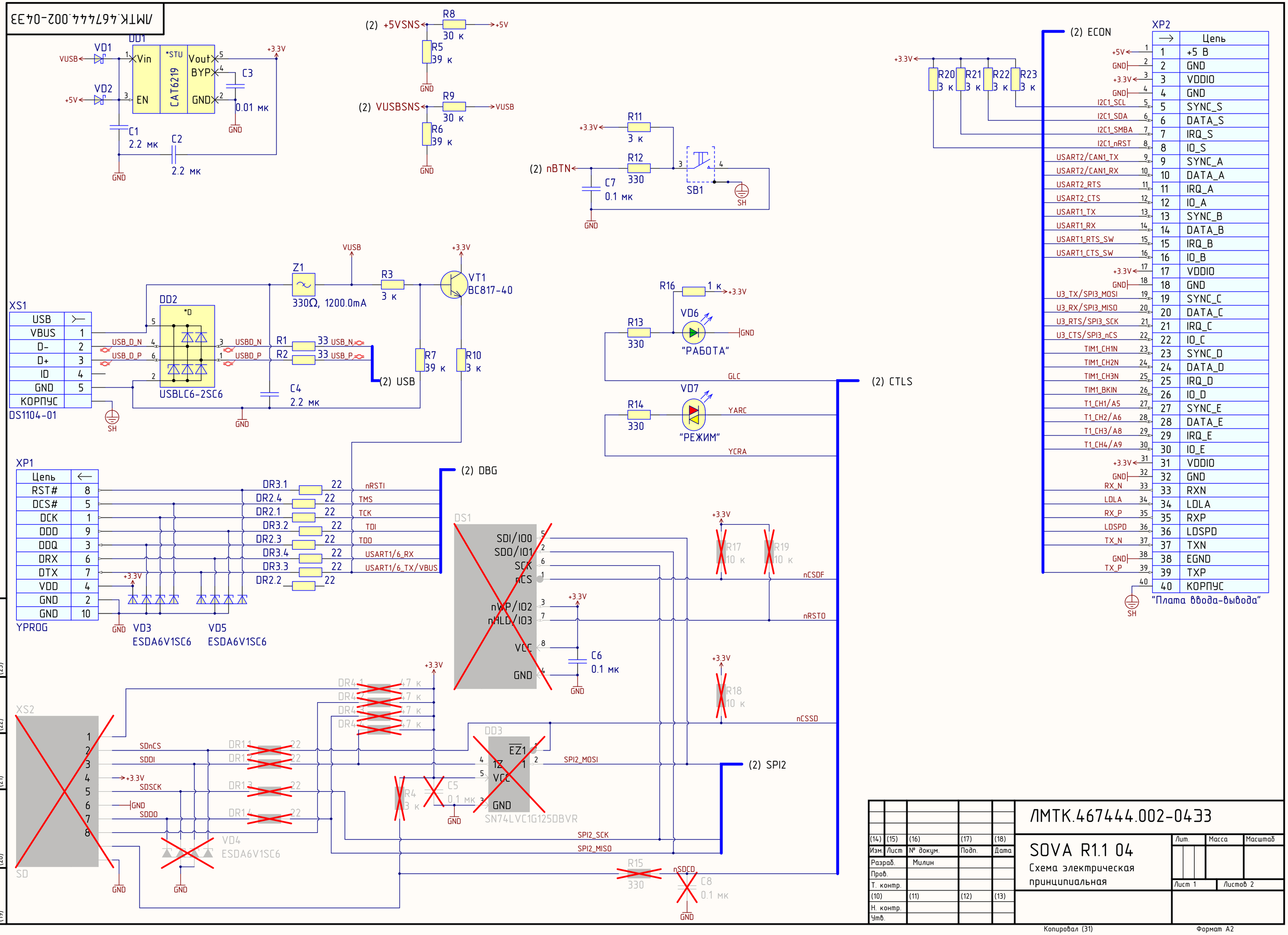
ЛМТК.467444.002-0433
DD1
CAT6219
Vin
EN
Vout
BYP
GND
*STU
VD1
VD2
VUSB
+5V
+3.3V
C1
2.2 мк
C2
2.2 мк
C3
0.01 мк
GND
(2) +5VSNS
R8
30 к
R5
39 к
(2) VUSBSNS
R9
30 к
R6
39 к
R11
3 к
R12
330
(2) nBTN
C7
0.1 мк
SB1
SH
XS1
USB
VBUS
D-
D+
ID
GND
КОРПУС
DS1104-01
DD2
USBLC6-2SC6
USB_D_N
USB_D_P
USBD_N
USBD_P
Z1
330Ω, 1200.0mA
R3
3 к
VT1
BC817-40
R1
R2
33
USB_N
USB_P
(2) USB
C4
2.2 мк
R7
39 к
R10
3 к
R16
1 к
R13
330
VD6
"РАБОТА"
GLC
(2) CTLS
R14
330
VD7
"РЕЖИМ"
YARC
YCRA
XP1
Цепь
RST#
DCS#
DCK
DDD
DDQ
DRX
DTX
VDD
GND
GND
YPROG
DR3.1
DR2.4
DR2.1
DR3.2
DR2.3
DR3.4
DR3.3
DR2.2
22
nRSTI
TMS
TCK
TDI
TDO
USART1/6_RX
USART1/6_TX/VBUS
(2) DBG
VD3
ESDA6V1SC6
VD5
ESDA6V1SC6
DS1
SDI/IO0
SDO/IO1
SCK
nCS
nWP/IO2
nHLD/IO3
VCC
GND
C6
0.1 мк
R17
10 к
R19
10 к
nCSDF
nRSTO
R18
10 к
nCSSD
XS2
SD
SDnCS
SDDI
SDSCK
SDDO
DR4.1
DR4.2
DR4.3
DR4.4
47 к
DR1.1
DR1.2
DR1.3
DR1.4
DD3
SN74LVC1G125DBVR
EZ1
1Z
VCC
GND
SPI2_MOSI
SPI2_SCK
SPI2_MISO
(2) SPI2
R4
3 к
C5
0.1 мк
VD4
ESDA6V1SC6
R15
330
nSDCD
C8
0.1 мк
(2) ECON
XP2
Цепь
+5 В
GND
VDDIO
GND
SYNC_S
DATA_S
IRQ_S
IO_S
SYNC_A
DATA_A
IRQ_A
IO_A
SYNC_B
DATA_B
IRQ_B
IO_B
VDDIO
GND
SYNC_C
DATA_C
IRQ_C
IO_C
SYNC_D
DATA_D
IRQ_D
IO_D
SYNC_E
DATA_E
IRQ_E
IO_E
VDDIO
GND
RXN
LDLA
RXP
LDSPD
TXN
EGND
TXP
КОРПУС
"Плата ввода-вывода"
R20
3 к
R21
3 к
R22
3 к
R23
3 к
I2C1_SCL
I2C1_SDA
I2C1_SMBA
I2C1_nRST
USART2/CAN1_TX
USART2/CAN1_RX
USART2_RTS
USART2_CTS
USART1_TX
USART1_RX
USART1_RTS_SW
USART1_CTS_SW
U3_TX/SPI3_MOSI
U3_RX/SPI3_MISO
U3_RTS/SPI3_SCK
U3_CTS/SPI3_nCS
TIM1_CH1N
TIM1_CH2N
TIM1_CH3N
TIM1_BKIN
T1_CH1/A5
T1_CH2/A6
T1_CH3/A8
T1_CH4/A9
RX_N
LDLA
RX_P
LDSPD
TX_N
TX_P
ЛМТК.467444.002-0433
SOVA R1.1 04
Схема электрическая принципиальная
Лит.
Масса
Масштаб
Лист 1
Листов 2
Разраб.
Милин
Пров.
Т. контр.
Н. контр.
Утв.
Копировал (31)
Формат А2

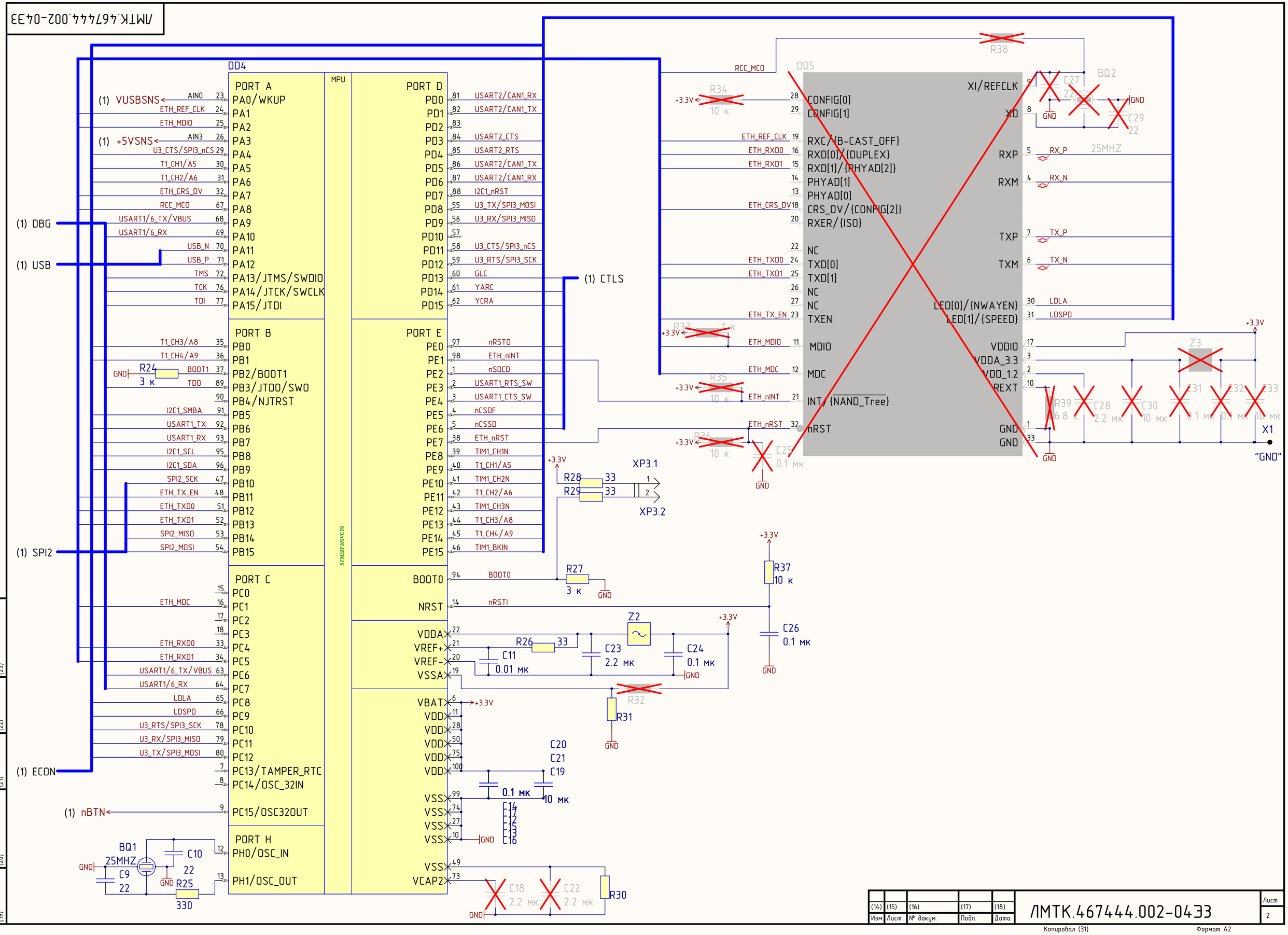
ЛМТК.467444.002-0433
DD4
MPU
PORT A
PA0/WKUP
PA1
PA2
PA3
PA4
PA5
PA6
PA7
PA8
PA9
PA10
PA11
PA12
PA13/JTMS/SWDIO
PA14/JTCK/SWCLK
PA15/JTDI
PORT B
PB0
PB1
PB2/BOOT1
PB3/JTDO/SWO
PB4/NJTRST
PB5
PB6
PB7
PB8
PB9
PB10
PB11
PB12
PB13
PB14
PB15
PORT C
PC0
PC1
PC2
PC3
PC4
PC5
PC6
PC7
PC8
PC9
PC10
PC11
PC12
PC13/TAMPER_RTC
PC14/OSC_32IN
PC15/OSC32OUT
PORT H
PH0/OSC_IN
PH1/OSC_OUT
PORT D
PD0
PD1
PD2
PD3
PD4
PD5
PD6
PD7
PD8
PD9
PD10
PD11
PD12
PD13
PD14
PD15
PORT E
PE0
PE1
PE2
PE3
PE4
PE5
PE6
PE7
PE8
PE9
PE10
PE11
PE12
PE13
PE14
PE15
BOOT0
NRST
VDDA
VREF+
VREF-
VSSA
VBAT
VDD
VSS
VCAP2
STM32F105VCT6
(1) VUSBSNS
(1) +5VSNS
(1) DBG
(1) USB
(1) SPI2
(1) ECON
(1) nBTN
(1) CTLS
AIN0
ETH_REF_CLK
ETH_MDIO
AIN3
U3_CTS/SPI3_nCS
T1_CH1/A5
T1_CH2/A6
ETH_CRS_DV
RCC_MCO
USART1/6_TX/VBUS
USART1/6_RX
USB_N
USB_P
TMS
TCK
TDI
T1_CH3/A8
T1_CH4/A9
BOOT1
TDO
I2C1_SMBA
USART1_TX
USART1_RX
I2C1_SCL
I2C1_SDA
SPI2_SCK
ETH_TX_EN
ETH_TXD0
ETH_TXD1
SPI2_MISO
SPI2_MOSI
ETH_MDC
ETH_RXD0
ETH_RXD1
USART1/6_TX/VBUS
USART1/6_RX
LDLA
LDSPD
U3_RTS/SPI3_SCK
U3_RX/SPI3_MISO
U3_TX/SPI3_MOSI
USART2/CAN1_RX
USART2/CAN1_TX
USART2_CTS
USART2_RTS
USART2/CAN1_TX
USART2/CAN1_RX
I2C1_nRST
U3_TX/SPI3_MOSI
U3_RX/SPI3_MISO
U3_CTS/SPI3_nCS
U3_RTS/SPI3_SCK
GLC
YARC
YCRA
nRSTO
ETH_nINT
nSDCD
USART1_RTS_SW
USART1_CTS_SW
nCSDF
nCSSD
ETH_nRST
TIM1_CH1N
T1_CH1/A5
TIM1_CH2N
T1_CH2/A6
TIM1_CH3N
T1_CH3/A8
T1_CH4/A9
TIM1_BKIN
BOOT0
nRSTI
R24 3 к
R28 33
R29 33
XP3.1
XP3.2
R27 3 к
R37 10 к
C26 0.1 мк
Z2
R26 33
C11 0.01 мк
C23 2.2 мк
C24 0.1 мк
R32
R31
C20
C21
C19
0.1 мк
10 мк
C14
C17
C12
C15
C13
C16
C18 2.2 мк
C22 2.2 мк
R30
BQ1 25MHZ
C9 22
C10 22
R25 330
DD5
CONFIG[0]
CONFIG[1]
RXC/{B-CAST_OFF}
RXD[0]/{DUPLEX}
RXD[1]/{PHYAD[2]}
PHYAD[1]
PHYAD[0]
CRS_DV/{CONFIG[2]}
RXER/{ISO}
NC
TXD[0]
TXD[1]
NC
NC
TXEN
MDIO
MDC
INT/{NAND_Tree}
nRST
XI/REFCLK
XO
RXP
RXM
TXP
TXM
LED[0]/{NWAYEN}
LED[1]/{SPEED}
VDDIO
VDDA_3.3
VDD_1.2
REXT
GND
GND
R38
BQ2
C27 22
C29 22
25MHZ
RX_P
RX_N
TX_P
TX_N
LDLA
LDSPD
R34 10 к
R33 1 к
R35 10 к
R36 10 к
C25 0.1 мк
Z3
R39 6.8 к
C28 2.2 мк
C30 10 мк
C31 0.1 мк
C32 0.1 мк
C33 10 мк
X1
"GND"
+3.3V
GND
Подп. дата (23)
Инв. № дубл. (22)
Взам. инв. № (21)
Подп. и дата (20)
Инв. № подл. (19)
(14) Изм.
(15) Лист
(16) № докум.
(17) Подп.
(18) Дата
ЛМТК.467444.002-0433
Лист 2
Копировал (31)
Формат А2

Order Code	Part Number	Comment	Package	Quantity	Description	Designator	Manufacturer
KX-7T 25.0 MHz	KX-7T 25.0 MHz	25MHZ	SMD3225	1	SMD Quartz Crystal	BQ1	Geyer
CC0603KRX5R6BB225	CC0603KRX5R6BB22	2.2 мк	0603	4	2.2uFx10 V, ±10%, X5R, Case 06	C1, C2, C4, C23	Yageo
CC0402KRX7R8BB103	CC0402KRX7R8BB10	0.01 мк	0402	2	10nFx25 V, ±10%, X7R, Case 04	C3, C11	Yageo
CC0402KRX7R6BB104	CC0402KRX7R6BB10	0.1 мк	0402	10	0.1uFx10 V, ±10%, X7R, Case 04	C6, C7, C12, C13, C	Yageo
CC0402JRNPO9BN220	CC0402JRNPO9BN22	22	0402	2	22pFx50 V, ±5%, NP0, Case 040	C9, C10	Yageo
CC0805KKX5R6BB106	CC0805KKX5R6BB10	10 мк	0805	3	10uFx10 V, ±10%, X5R, Case 08	C19, C20, C21	Yageo
CAT6219-330TDGT3	CAT6219-330TDGT3	CAT6219	SOT23-5	1	500 mA CMOS LDO Regulator	DD1	ON Semiconductor
USBLC6-2SC6	USBLC6-2SC6	USBLC6-2SC6	SOT23-6	1	Very low capacitance ESD protecti	DD2	STMicroelectronics
STM32F105VCT6	STM32F105VCT6	STM32F105VCT6	LQFP100	1	Connectivity line, ARM®-based	DD4	STMicroelectronics
YC164-JR-0722RL	YC164-JR-0722RL	22	0603x4	2	22Ohm R-Array /R-Network (con	DR2, DR3	Yageo
RC0402JR-0733RL	RC0402JR-0733RL	33	0402	5	33Ohm General Purpose Chip Re	R1, R2, R26, R28, R2	Yageo
RC0402JR-073KL	RC0402JR-073KL	3 к	0402	9	3kOhm General Purpose Chip Re	R3, R10, R11, R20, R	Yageo
RC0402JR-0739KL	RC0402JR-0739KL	39 к	0402	3	39kOhm General Purpose Chip R	R5, R6, R7	Yageo
RC0402JR-0730KL	RC0402JR-0730KL	30 к	0402	2	30kOhm General Purpose Chip R	R8, R9	Yageo
RC0402JR-07330RL	RC0402JR-07330RL	330	0402	4	330Ohm General Purpose Chip R	R12, R13, R14, R25	Yageo
RC0402JR-071KL	RC0402JR-071KL	1 к	0402	1	1kOhm General Purpose Chip Re	R16	Yageo
RC0402JR-070RL	RC0402JR-070RL	0	0402	2	0Ohm General Purpose Chip Resi	R30, R31	Yageo
RC0402JR-0710KL	RC0402JR-0710KL	10 к	0402	1	10kOhm General Purpose Chip R	R37	Yageo
IT-1188-160G-G	IT-1188-160G-G	SB-SSCNor		1	Side pushing SMT Type tact switch	SB1	Switronic
MBR0540T1G	MBR0540	MBR0540	SOD123	2	Surface Mount Schottky Power Re	VD1, VD2	ON Semiconductor
ESDA6V1SC6	ESDA6V1SC6	ESDA6V1SC6	SOT23-6	2	Quad Transil array for ESD protecti	VD3, VD5	STMicroelectronics
КИПД66Л8-Л	КИПД66Л8-Л	"РАБОТА"		1	Светодиод 3 мм	VD6	Планета СИД
КИПД45В8-М	КИПД45В8-М	"РЕЖИМ"	3 мм	1	Светодиод 3 мм двухцветный к	VD7	Планета СИД
BC817-40	BC817-40	BC817-40	SOT23	1	NPN general-purpose transistors	VT1	NXP
	TPR300_200i20	"GND"		1	Печатный контакт 3х2 мм	X1	
DS1014-10SF1B	YPROG_2mm_DCH_	YPROG		1	YPROG Connector (PLD2-10)	XP1	Connfly
DS1025-05-2*20P8BV	B2BMCU_8_6x4_E_T	"Плата ввода-вывода"		1	Соединитель для подключения	XP2	Connfly
DS1025-01-1*2P8BV1	PLS2-2	PLS2-2		1	DS1025-01 Series 2mm PIN HEAD	XP3	Connfly
DS1104-01-BN0R-ELC	DS1104-01-BN0R-EL	DS1104-01	USB micro B	1	Micro USB Female 5P	XS1	Connfly
BLM18PG331SN1#	BLM18PG331SN1#	330Ω, 1200.0mA	0603	2	330Ω@100MHz 1200.0mA 1608	Z1, Z2	Murata

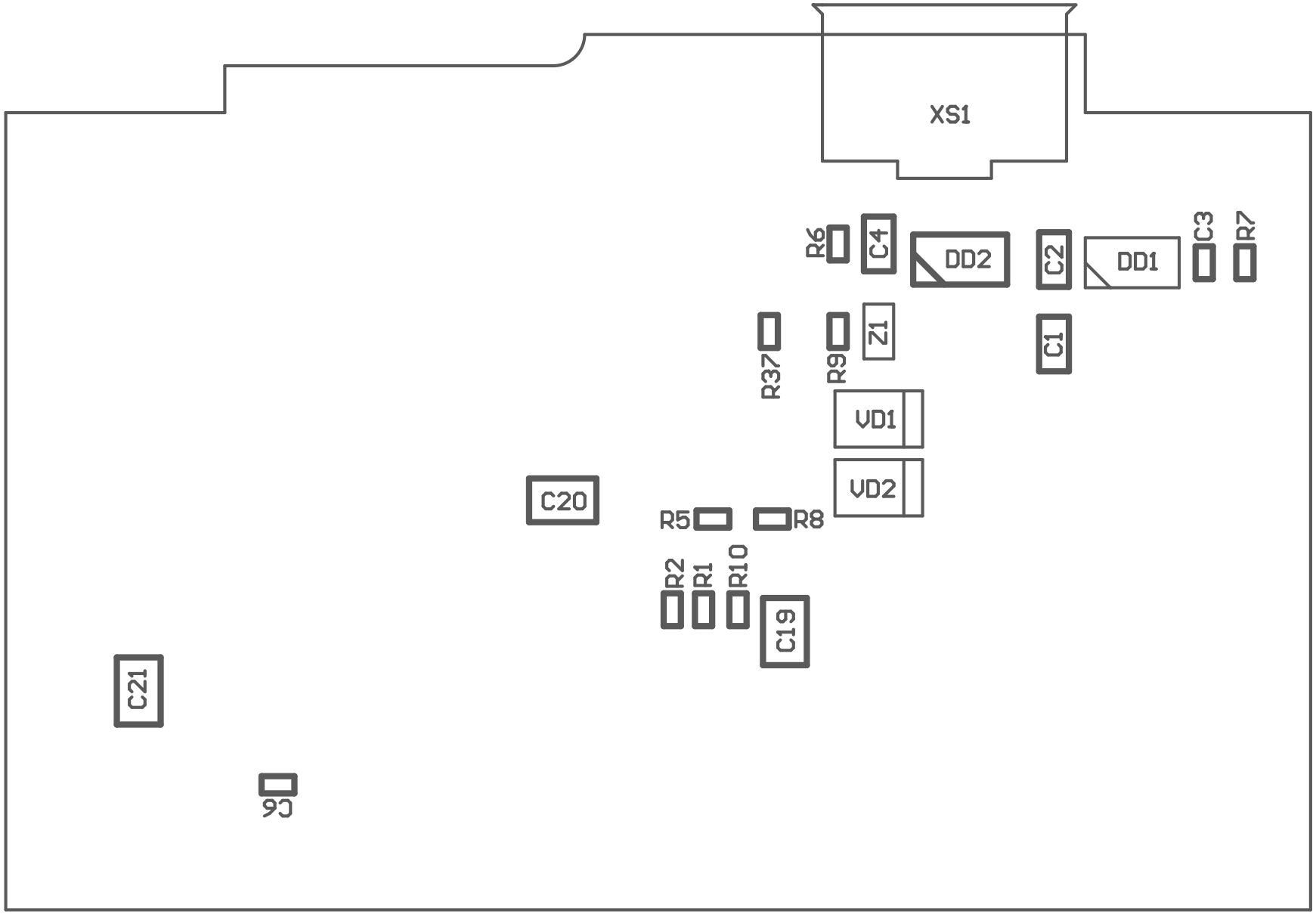
XS1
R6
C4
DD2
C2
DD1
C3
R7
R37
R9
Z1
C1
VD1
VD2
C20
R5
R8
R2
R1
R10
C19
C21
G5

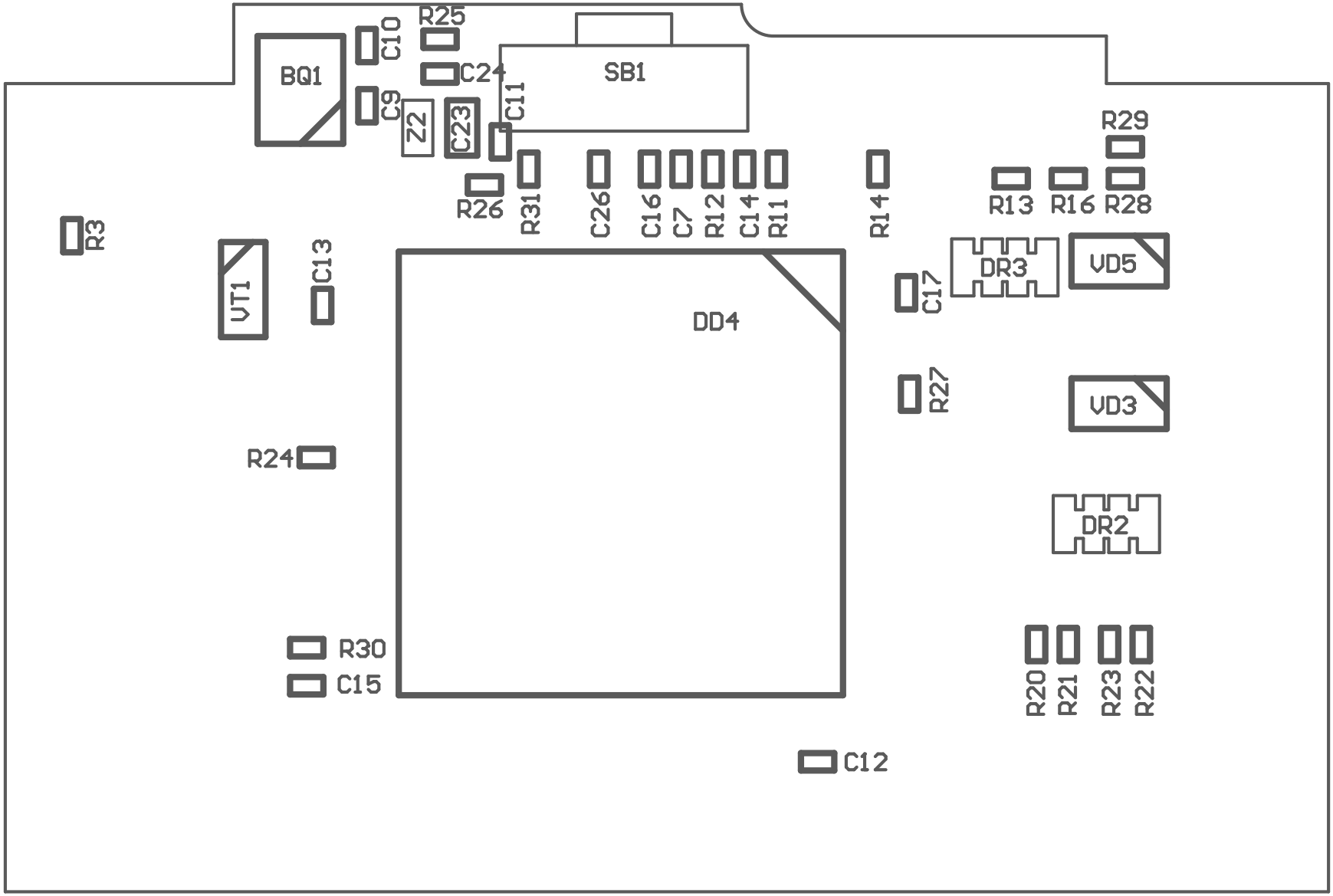
BQ1
C10
R25
C24
C9
Z2
C23
C11
SB1
R29
R3
R26
R31
C26
C16
C7
R12
C14
R11
R14
R13
R16
R28
VT1
C13
DD4
C17
DR3
VD5
R27
VD3
R24
DR2
R30
C15
R20
R21
R23
R22
C12

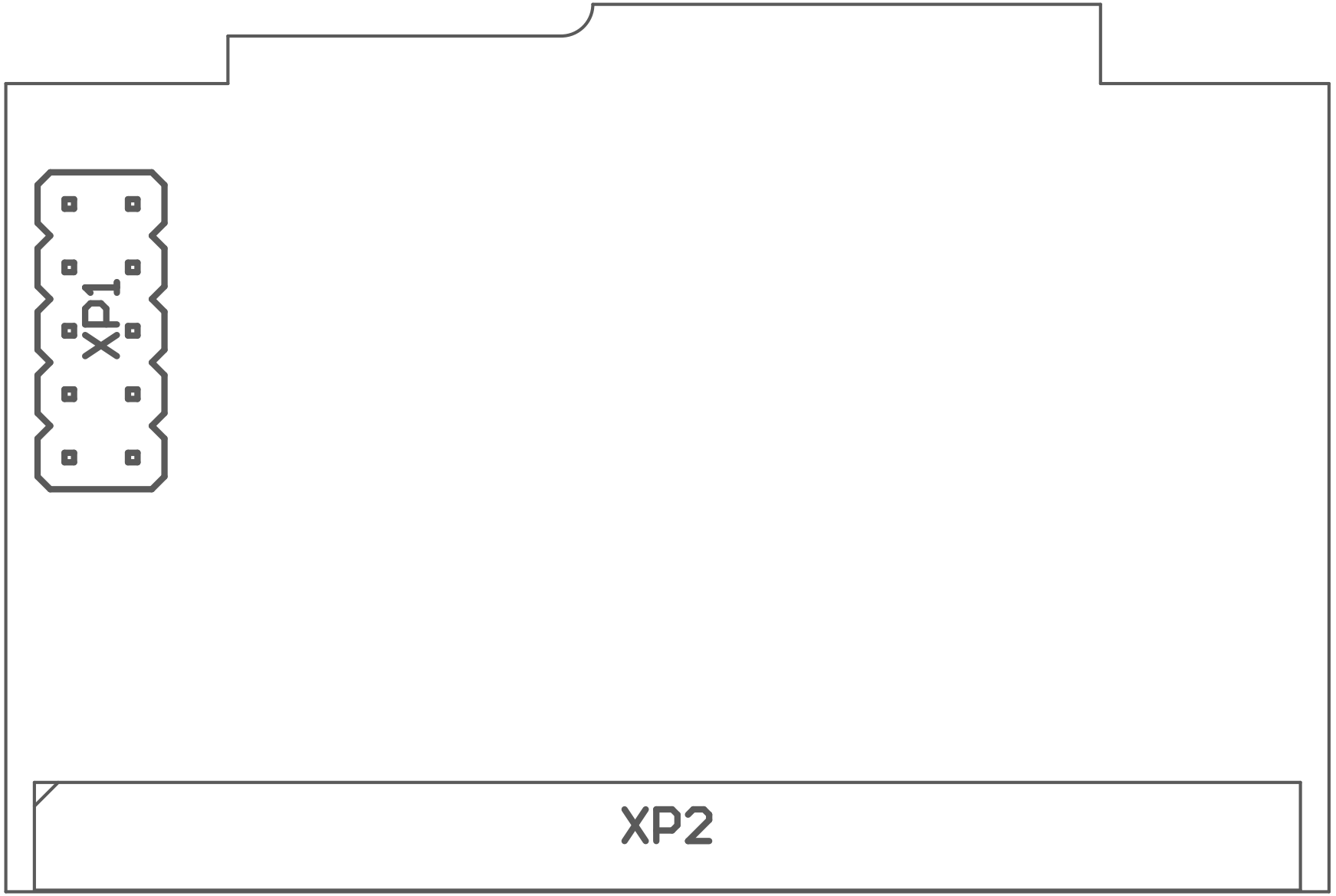
XP1
XP2

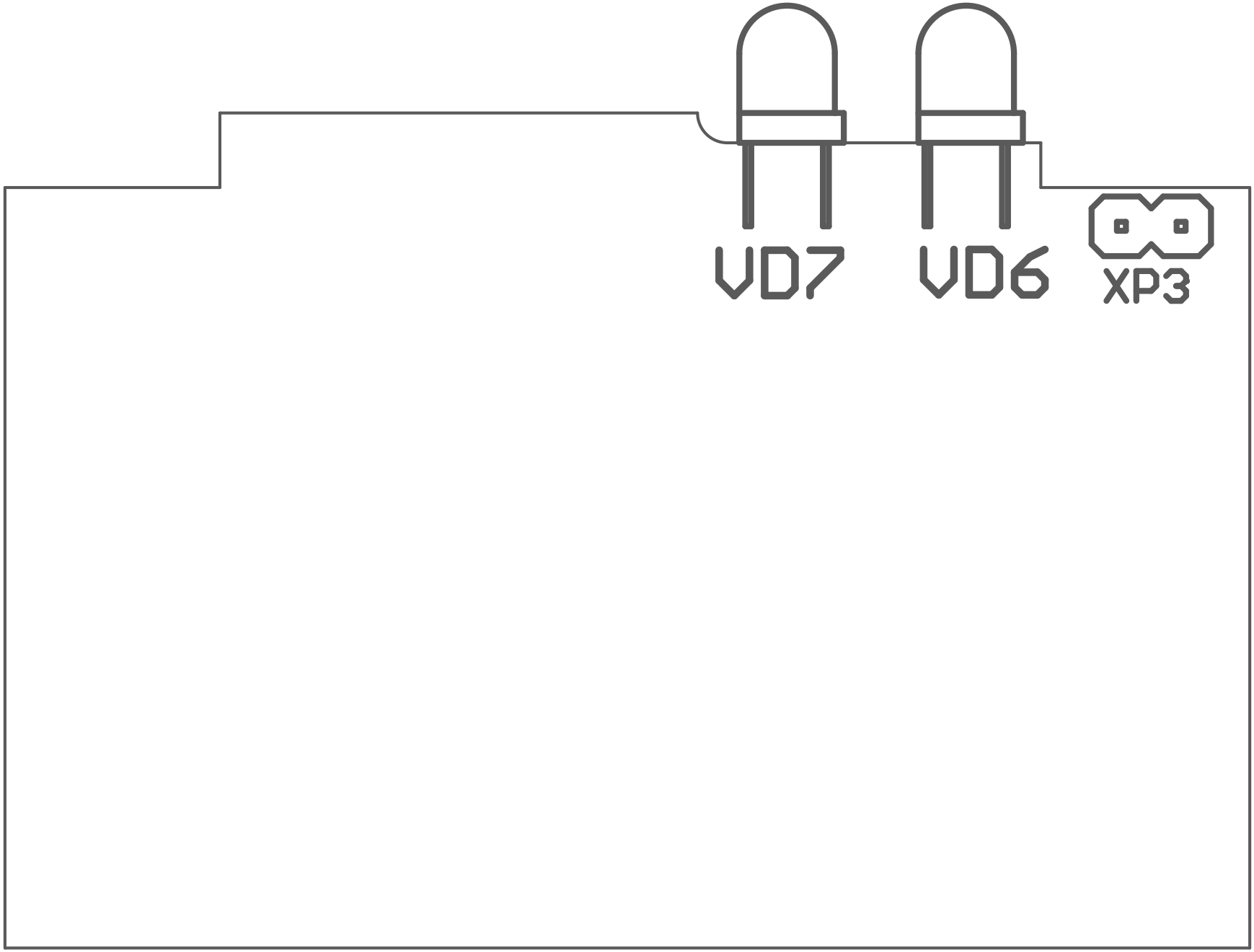
VD7
VD6
XP3

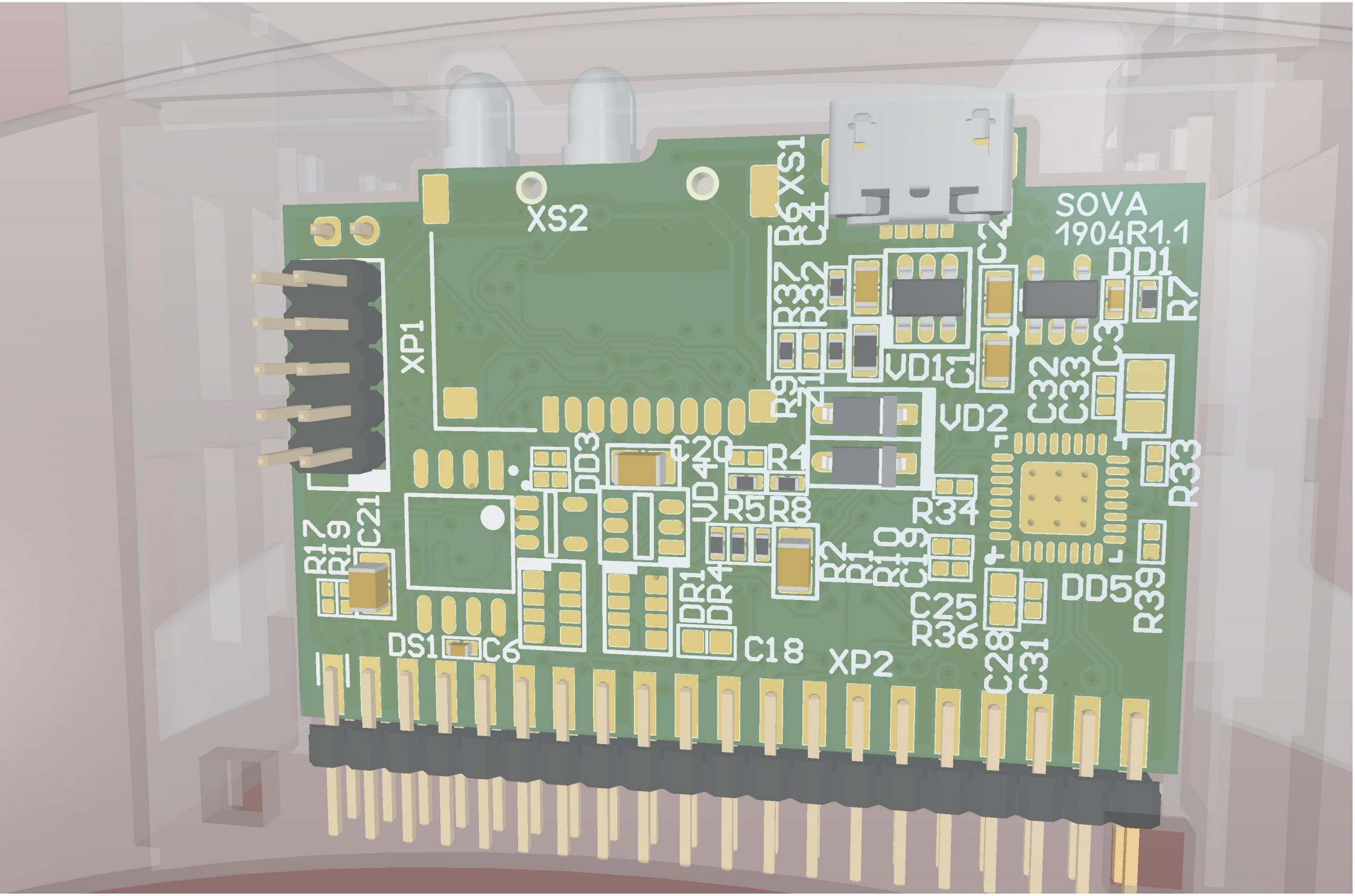
XS2
XS1
SOVA
1904R1.1
XP1
XP2
DD1
DD3
DD4
DD5
VD1
VD2
DS1
C6
C18
C20
C21
C25
C28
C31
C32
C33
R4
R5
R8
R17
R19
R33
R34
R36
R39

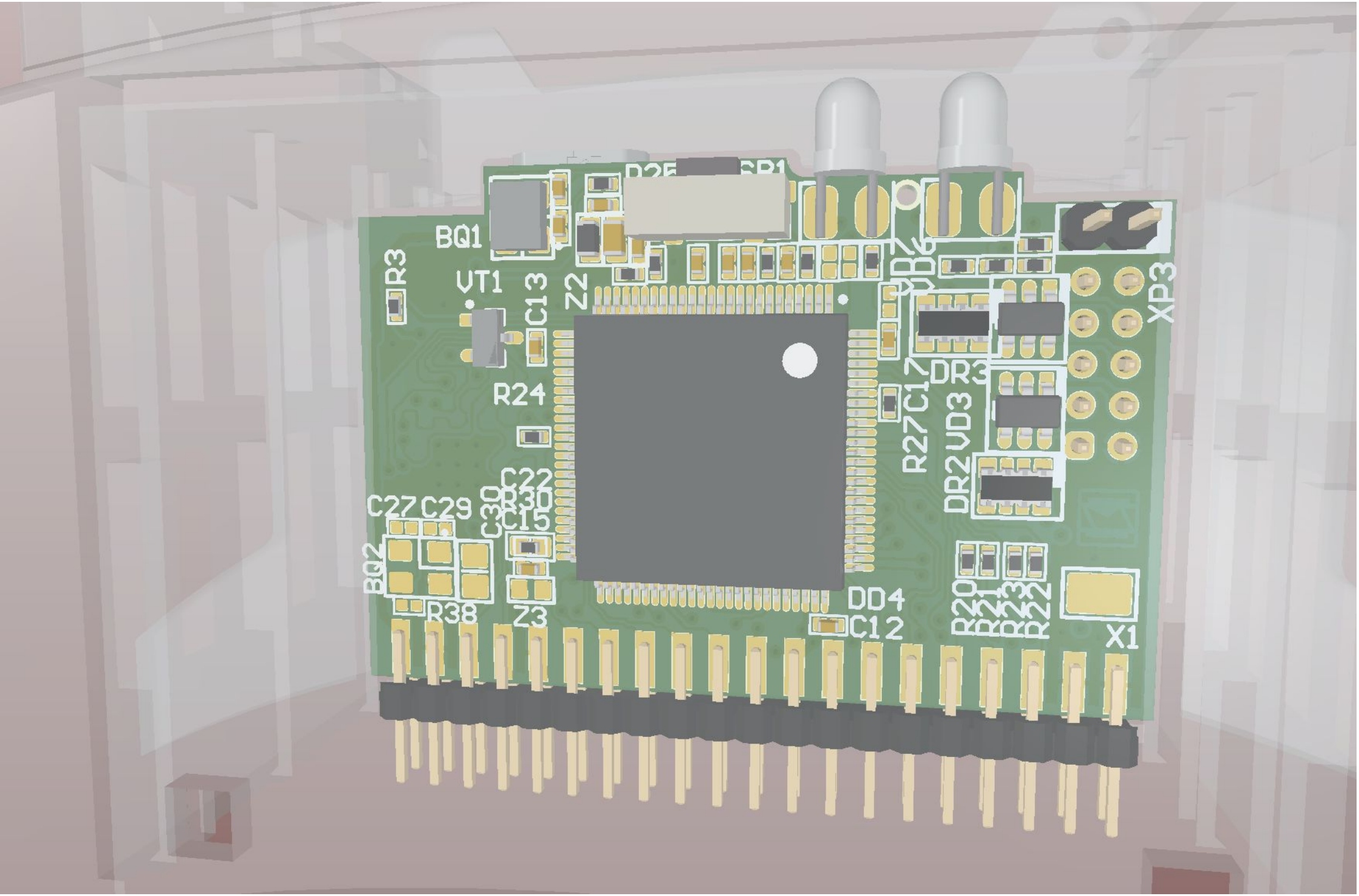
BQ1
R3
VT1
C13
Z2
R24
C22
C27
C29
C30
R30
C15
BQ2
R38
Z3
DD4
C12
R20
R21
R23
R22
X1
R27
C17
DR3
VD3
DR2
XP3