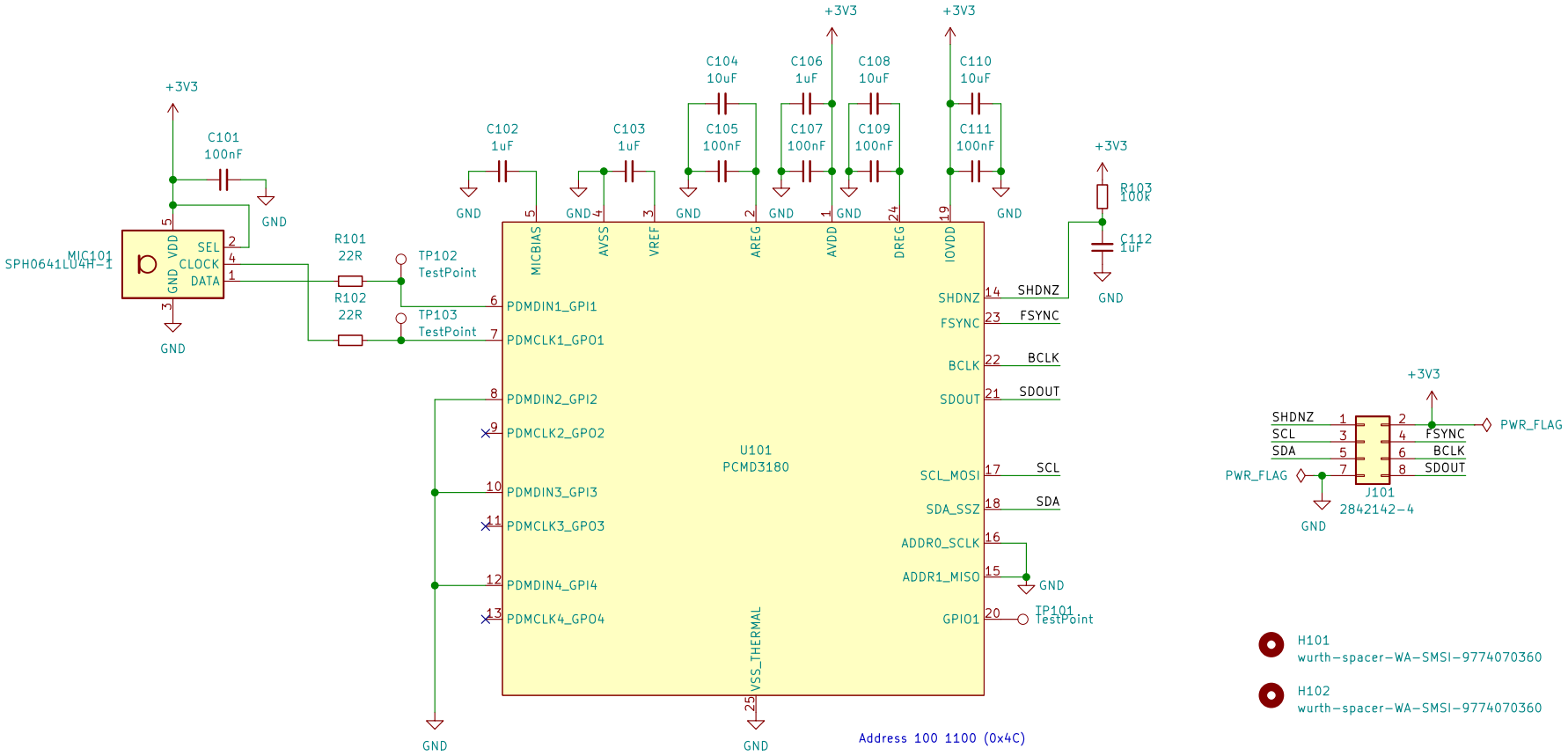

Sheet: /
File: safeproject-mic-r2.kicad_sch

Title:

Size: A4	Date:	Rev:
KiCad E.D.A. kicad 5.99.0-1.20210329git38c849b.fc33		Id: 1/1