ARNING

brother

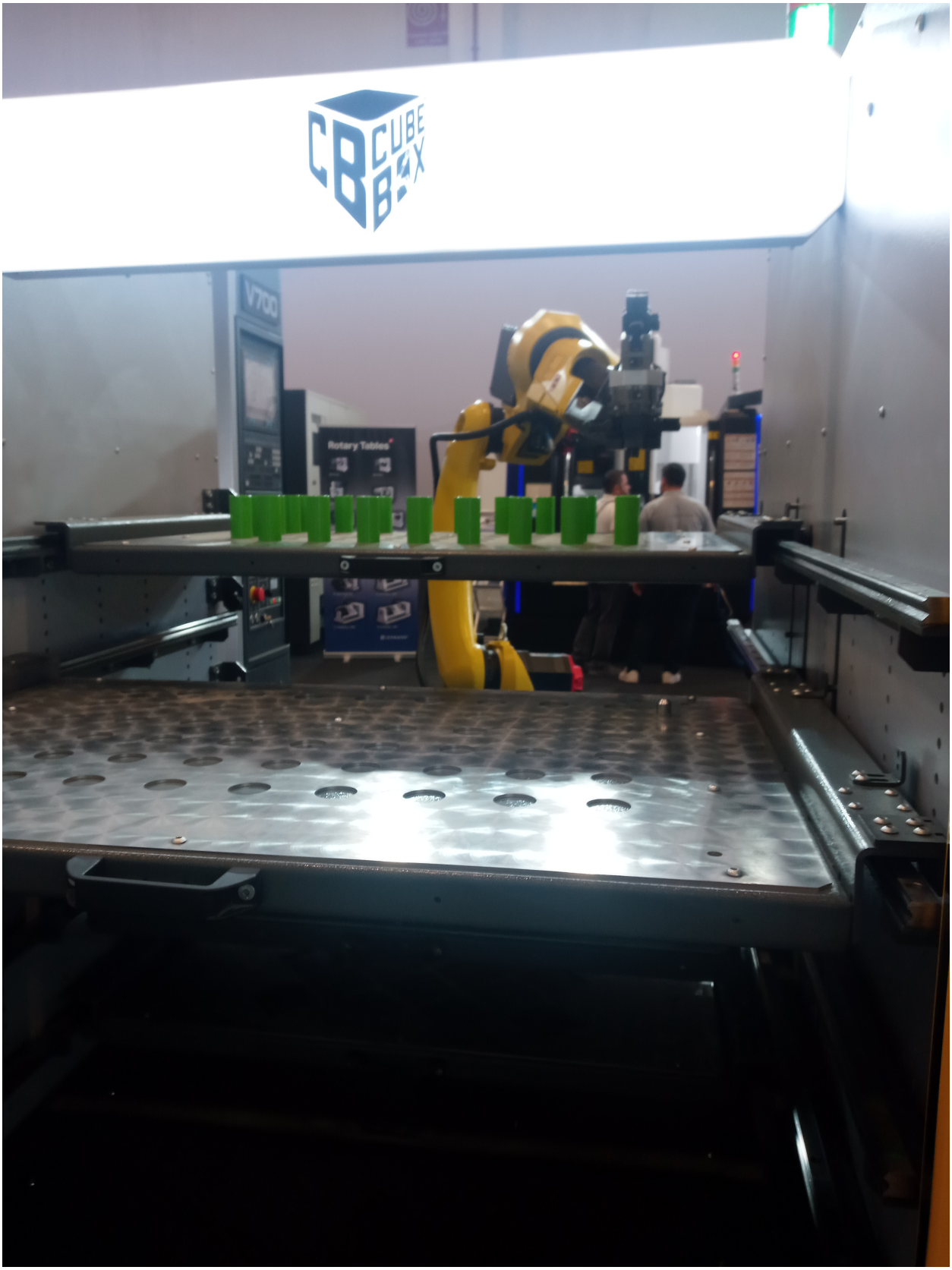
CUBE BOX
V700
Rotary Tables

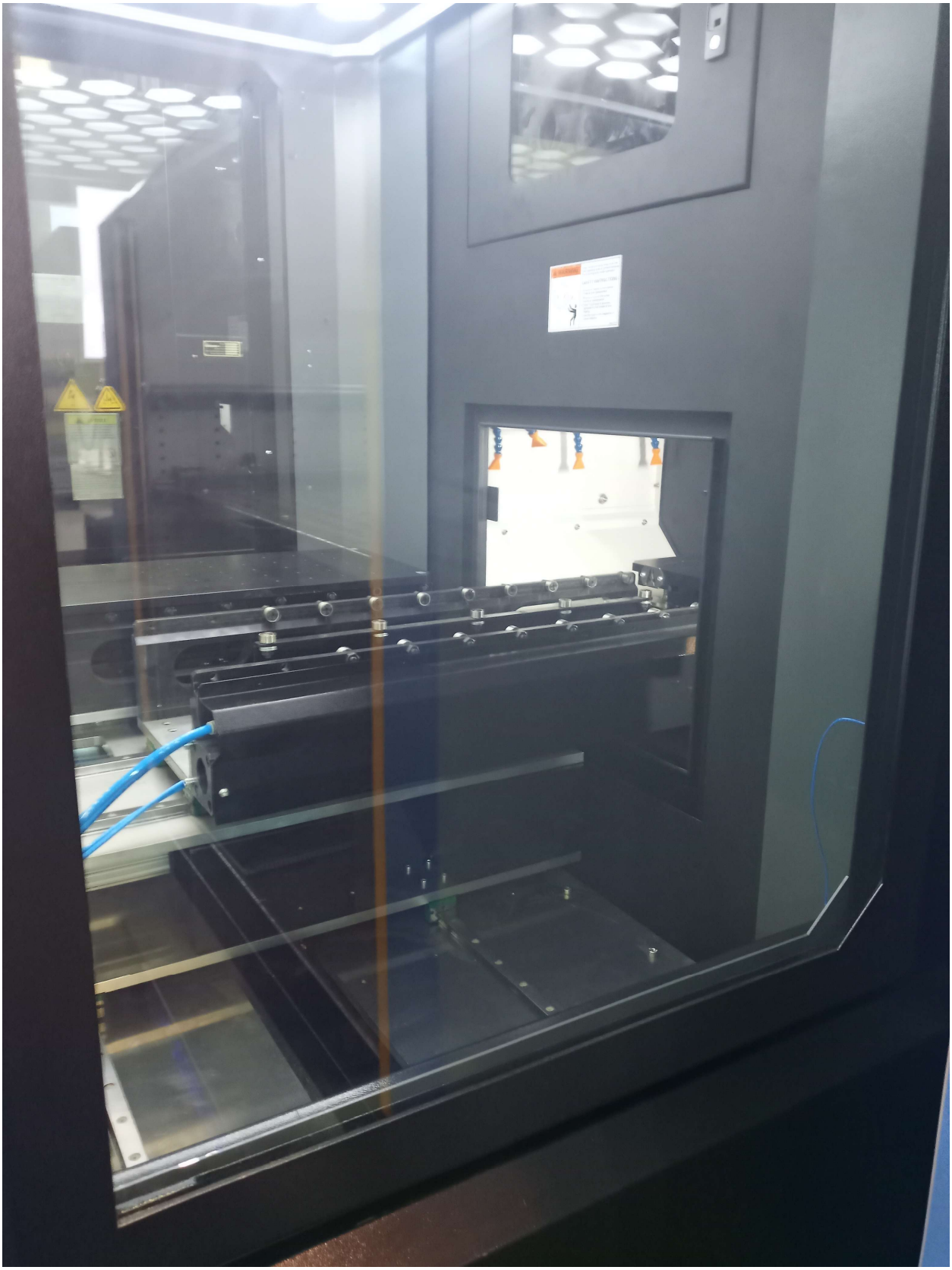

TMV-720A
MODE SELECT
FEEDRATE OVERRIDE
RAPID OVERRIDE
CYCLE START
FEED HOLD

DANGER
TEZMAKSAN
www.tezmaksan.com.tr
RENISHAW
ÇALIŞIYOR

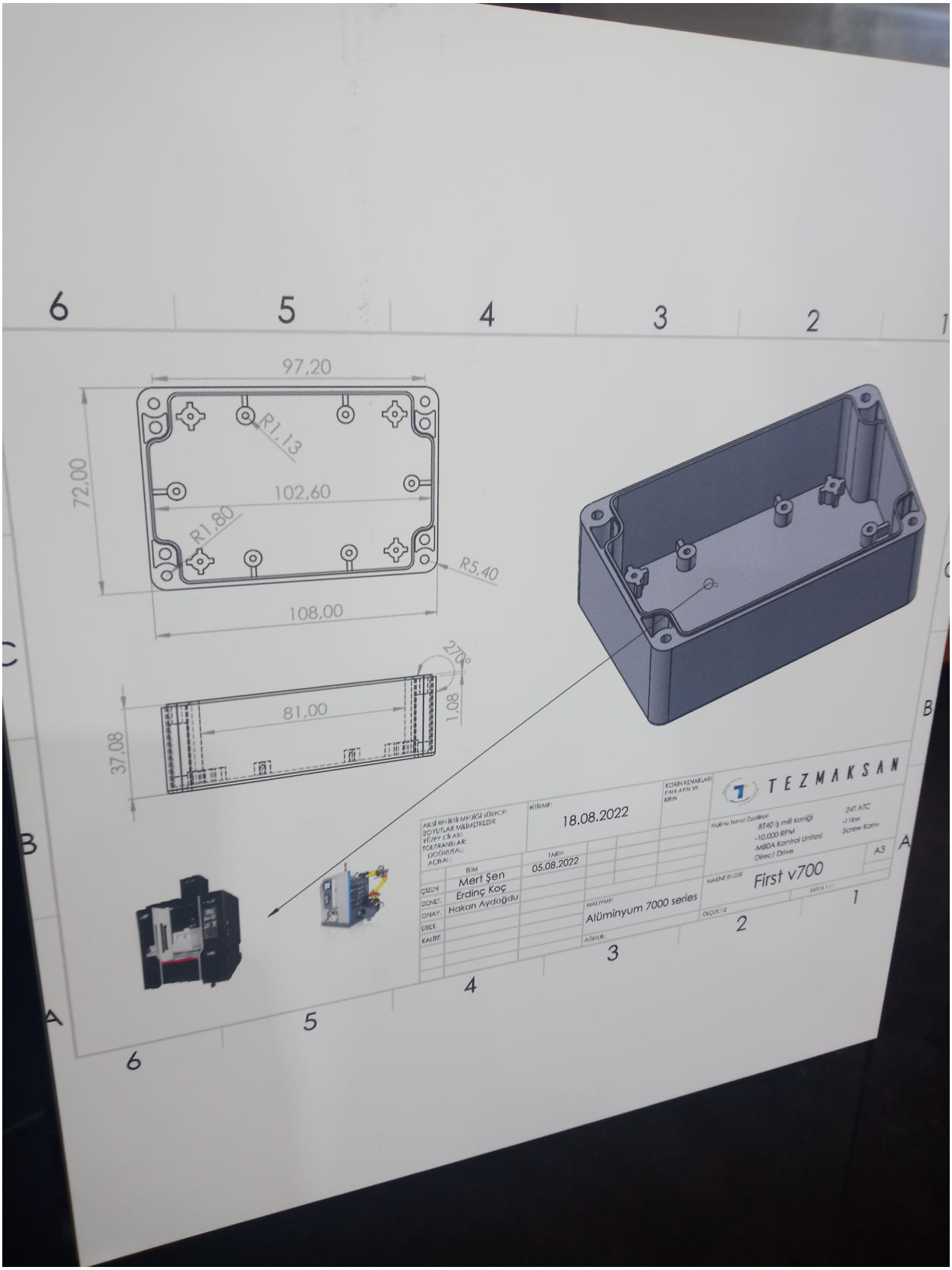
97,20
72,00
R1,13
102,60
R1,80
R5,40
108,00
270°
81,00
1,08
37,08
TEZMAKSAN
18.08.2022
05.08.2022
Mert Şen
Erdinç Koç
Hakan Aydoğdu
Alüminyum 7000 series
First v700
A3

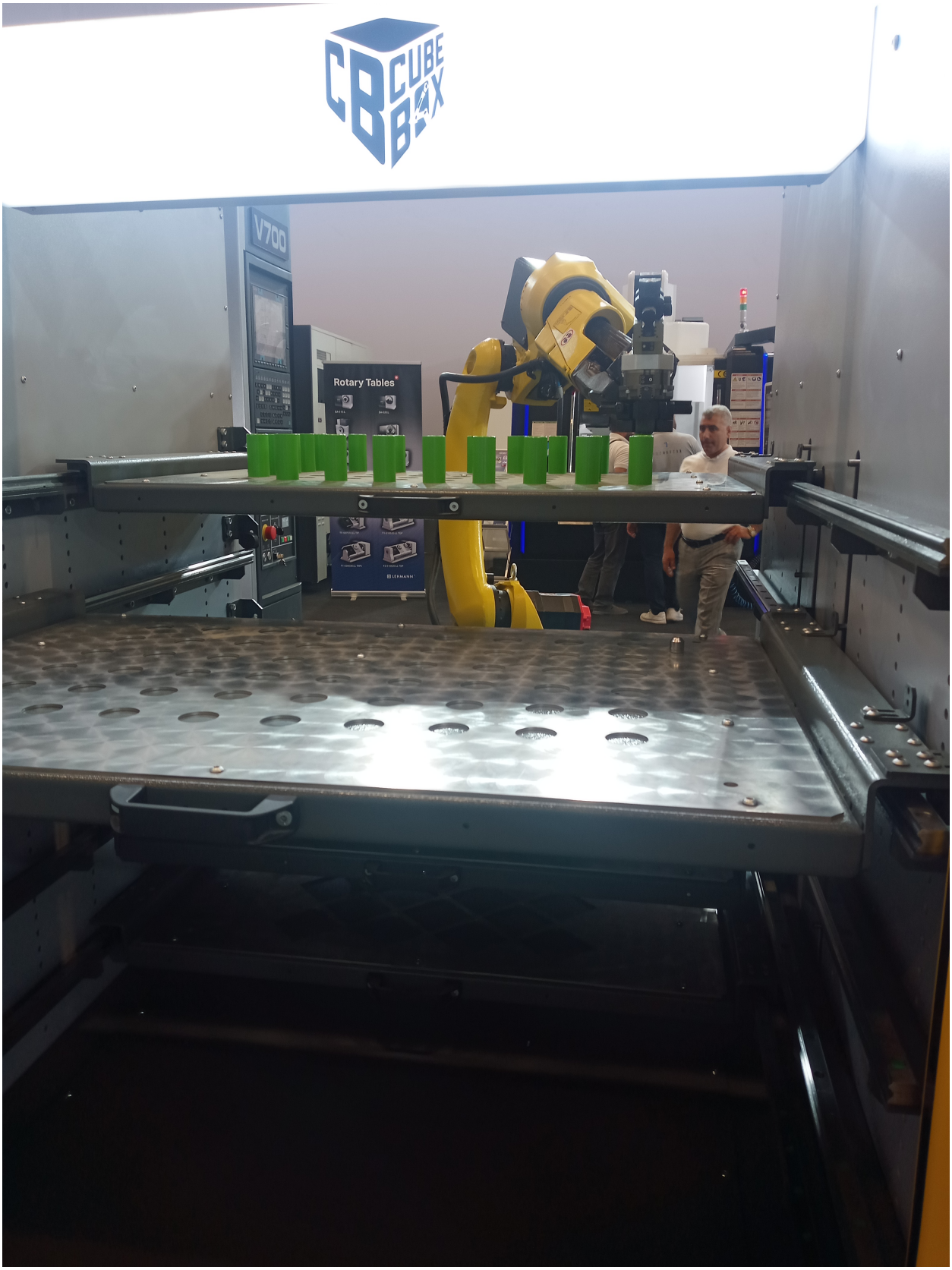
CUBE BOX
V700
Rotary Tables
LEHMANN

TEZMAKSAN
AIR-2
AIR-1
P-1
0-1 MPa
CAUTION
J2

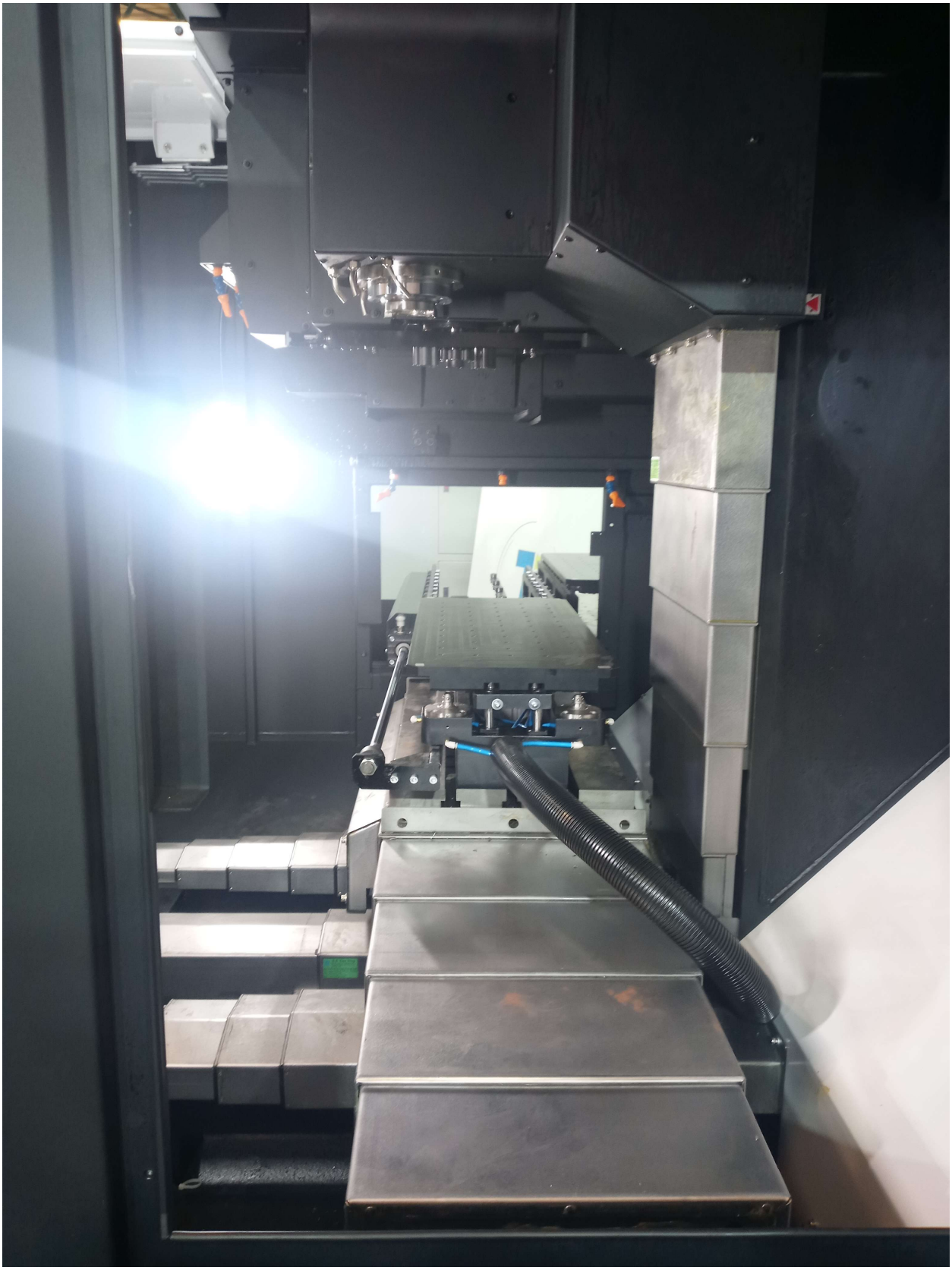

TEZMAKSAN
AIR-2
AIR-1
P-1
0-1 MPa
CAUTION
J2