REVISIONS			
REV.	DESCRIPTION	DATE	APPROVED
A	ADDED DISCHARGE RAMPS	3/6/2017	FBW

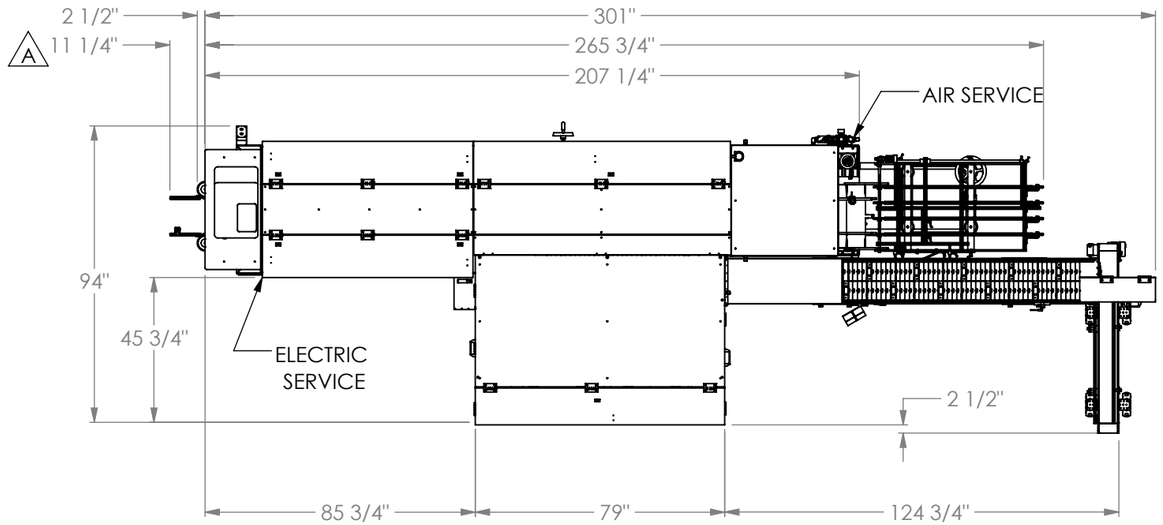

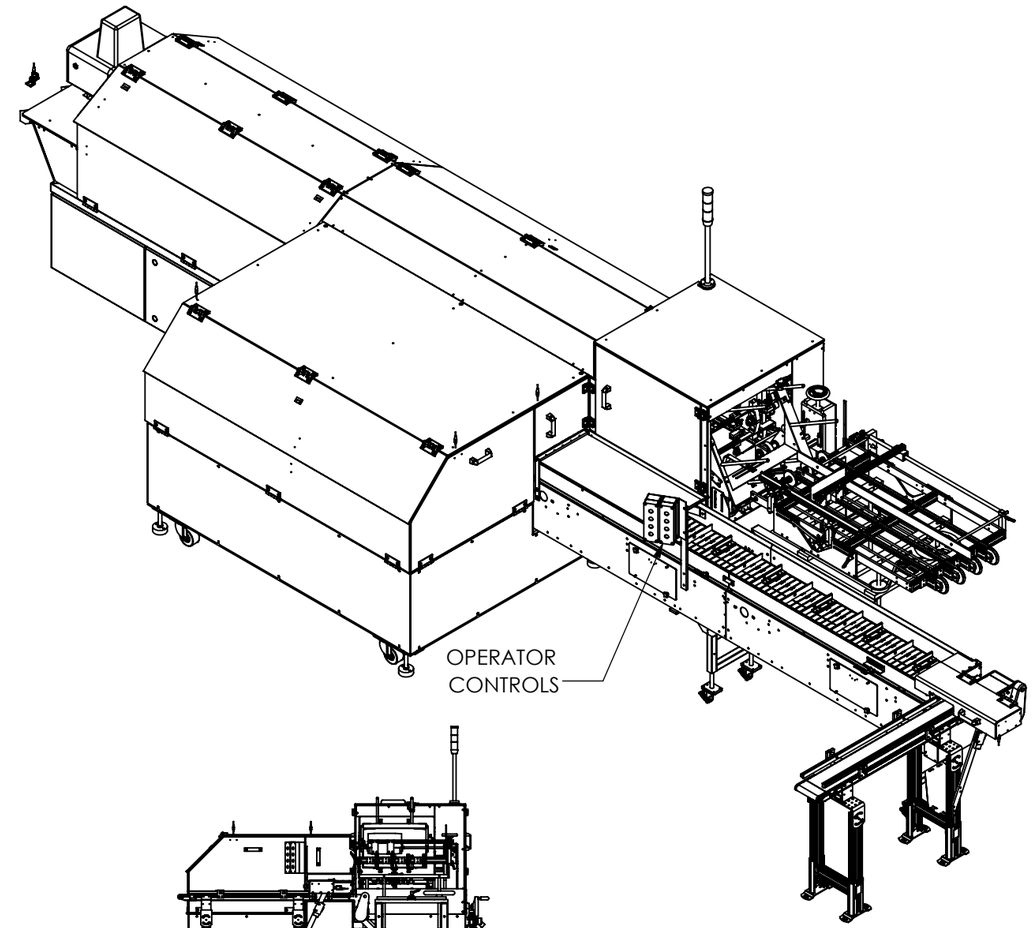

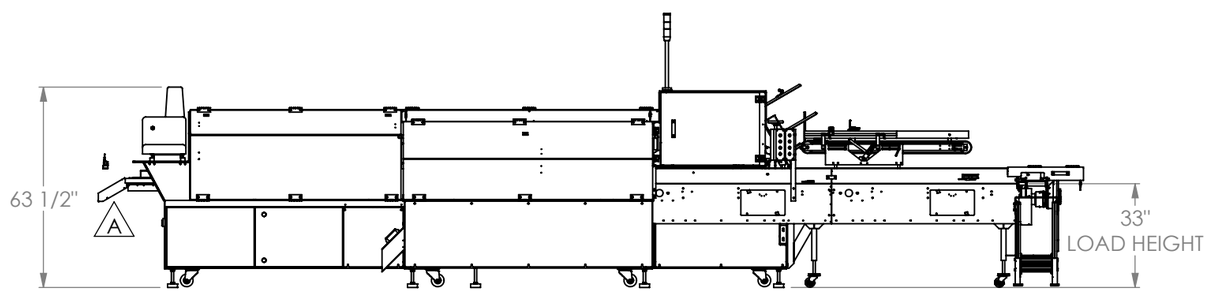

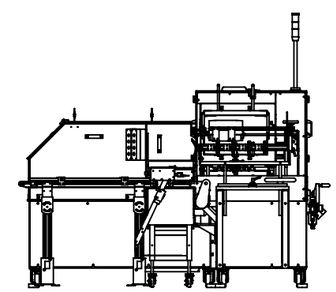

APPROVAL SPECIFICATIONS

Customer: SEMPER
Voltage: 220 Phase: 1 Amps: 10
Air: 80 psi 15 scfm
Speed:

Non-Standard Carton and Product Sizes / Restrictions:

Single Size Feeder at Conveyor End

PRELIMINARY
CAUTION: DRAWNG REFLECTS
INCOMPLETE DESIGN
AND IS SUBJECT TO MINOR CHANGES.
DIMENSIONS ARE APPROXIMATE.

APPROVED BY: _____ **DATE:** _____

JOB NUMBER	
JOB NAME	
ENG	

MANUFACTURING NOTES:
REMOVE BURRS AND SHARP EDGES

THIRD ANGLE PROJECTION

PROPRIETARY AND CONFIDENTIAL
THE INFORMATION CONTAINED IN THIS DRAWING IS THE SOLE PROPERTY OF ECONOCORP INC. ANY REPRODUCTION IN PART OR AS A WHOLE WITHOUT THE WRITTEN PERMISSION OF ECONOCORP INC. IS PROHIBITED.

DIMENSIONS ARE IN INCHES
TOLERANCES:
FRACTIONAL ± 1/64
ANGULAR: MACH ± 0.5°
TWO PLACE DECIMAL ± 0.01
THREE PLACE DECIMAL ± 0.005

FINISH: NONE
QTY:

ECONOCORP INC.

TITLE
PEGASUS WITH INFEED AND FEEDER

DRAWN BY	DATE DRAWN	SIZE	DWG. NO.	REV.
FBW	2/2/17	B	10617-500-APPR	A

SIMILAR TO: 10601-500 | USED ON: | SCALE: 1:48 | SHEET 1 OF 1

\\Econoserver\SolidWorks\10600\10617 SEMPER\
LAST SAVED: 3/6/2017 8:59:19 AM