REVISIONS			
REV.	DESCRIPTION	DATE	APPROVED

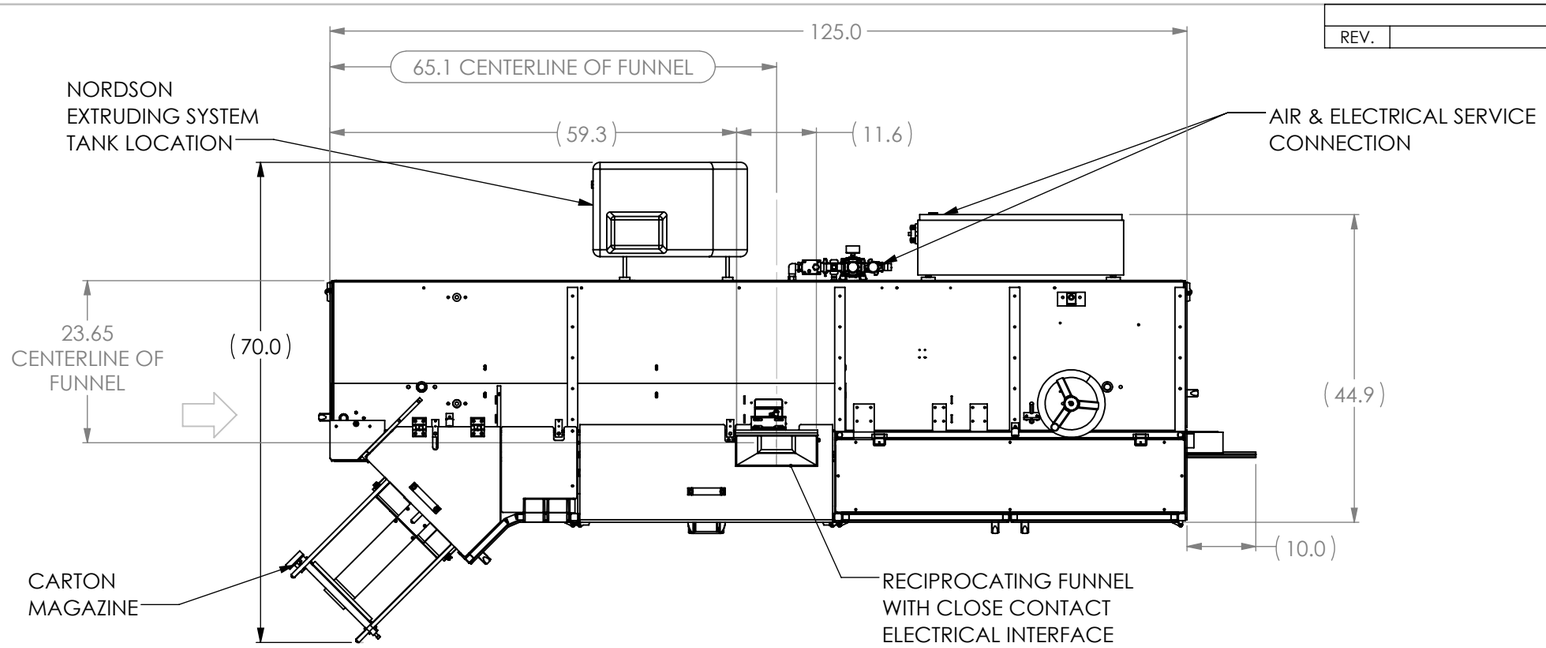

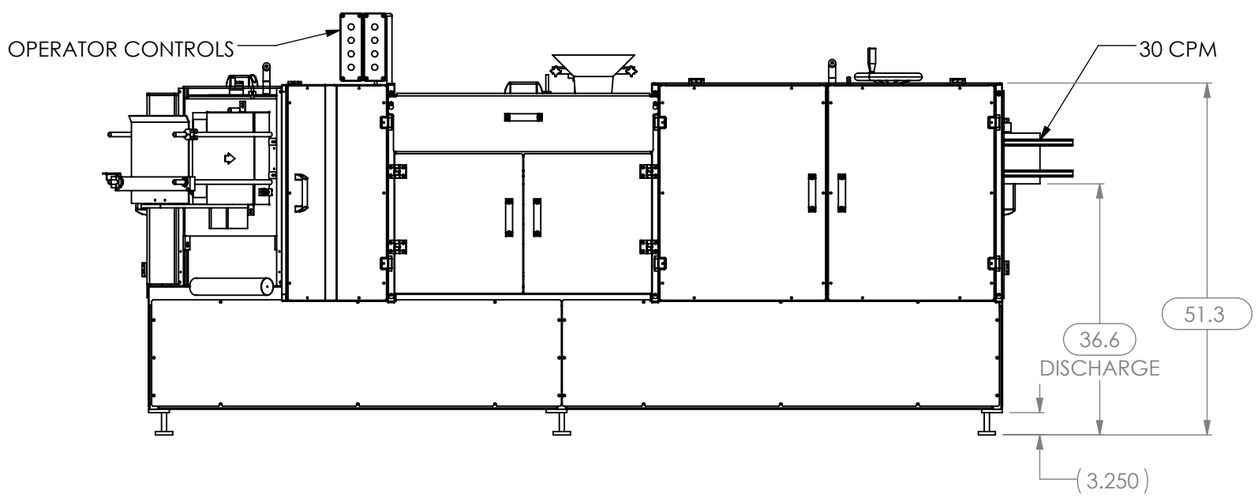

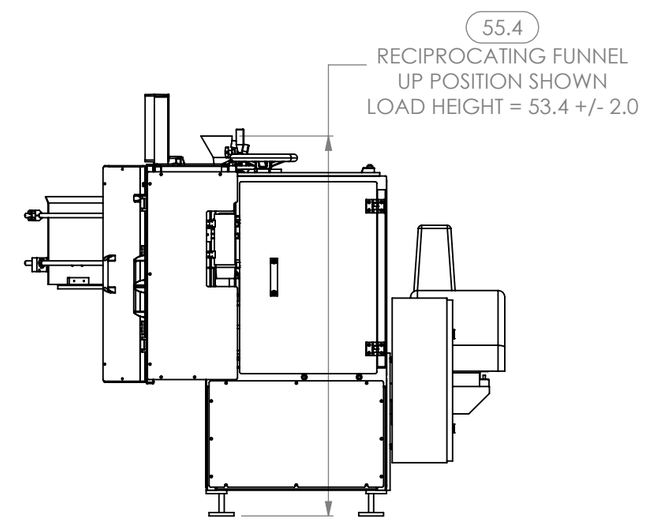

APPROVAL SPECIFICATIONS

Customer:	Veritiv Seneca				
Voltage:	220	Phase:	1	Amps:	25
Air:	80	psi	10	scfm	
Speed:	30 CPM				

Non-Standard Carton and Product Sizes / Restrictions:

9.75 X 3.0 X 7.38

PRELIMINARY
CAUTION: DRAWNG REFLECTS
INCOMPLETE DESIGN
AND IS SUBJECT TO CHANGES.
DIMENSIONS ARE APPROXIMATE.

APPROVED BY: _____ **DATE:** _____

JOB NUMBER	
JOB NAME	
ENG	

MANUFACTURING NOTES:
REMOVE BURRS AND SHARP EDGES

THIRD ANGLE PROJECTION

PROPRIETARY AND CONFIDENTIAL
THE INFORMATION CONTAINED IN THIS DRAWING IS THE SOLE PROPERTY OF ECONOCORP INC. ANY REPRODUCTION IN PART OR AS A WHOLE WITHOUT THE WRITTEN PERMISSION OF ECONOCORP INC. IS PROHIBITED.

DIMENSIONS ARE IN INCHES
TOLERANCES:
FRACTIONAL ± 1/64
ANGULAR: MACH ± 0.5°
TWO PLACE DECIMAL ± 0.01
THREE PLACE DECIMAL ± 0.005

FINISH: NONE | QTY: 1

ECONOCORP INC.

TITLE
V-SYSTEM 16 INCH PITCH RH

APPROVAL DRAWING

DRAWN BY	DATE DRAWN	SIZE	DWG. NO.	REV.
DJC	09/11/18	B	10892-600	

SIMILAR TO: 7551 / 9756 | USED ON: | SCALE: 1:48 | SHEET 1 OF 1

\\ECONOSERVER\SolidWorks\10800\10892 VERITIV SENECA\
LAST SAVED: 10/18/2018 11:42:58 AM