REVISIONS			
REV.	DESCRIPTION	DATE	APPROVED

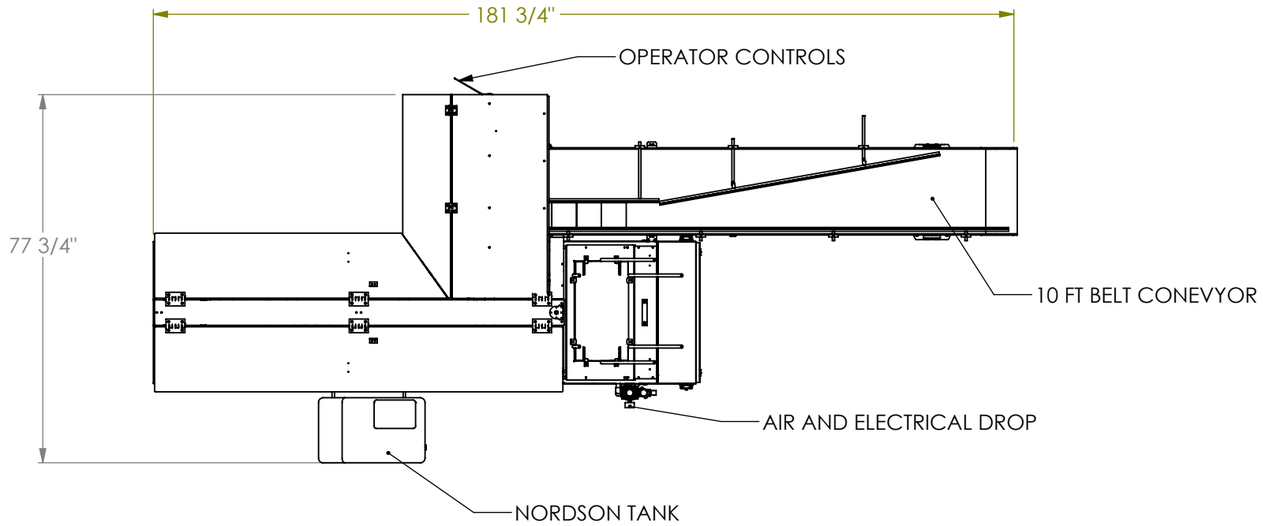

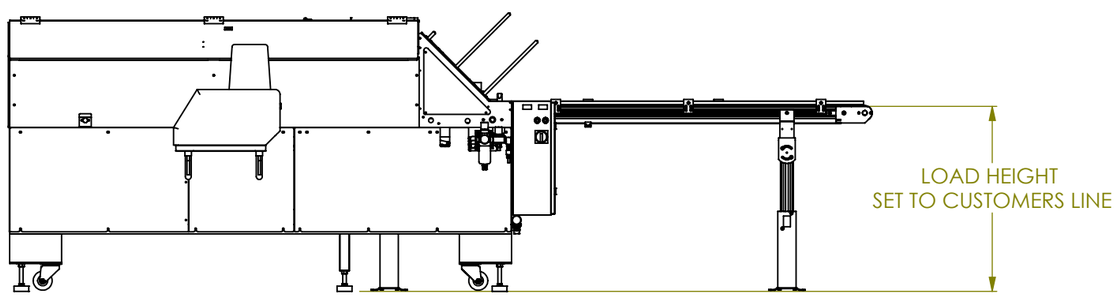

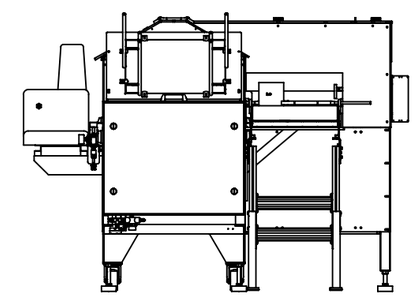

PRELIMINARY
CAUTION: DRAWNG REFLECTS
INCOMPLETE DESIGN
AND IS SUBJECT TO CHANGES.
DIMENSIONS ARE APPROXIMATE.

APPROVED BY: _____ **DATE:** _____

JOB NUMBER	
JOB NAME	
ENG	

MANUFACTURING NOTES:
REMOVE BURRS AND SHARP EDGES

THIRD ANGLE PROJECTION

PROPRIETARY AND CONFIDENTIAL
THE INFORMATION CONTAINED IN THIS DRAWING IS THE SOLE PROPERTY OF ECONOCORP INC. ANY REPRODUCTION IN PART OR AS A WHOLE WITHOUT THE WRITTEN PERMISSION OF ECONOCORP INC. IS PROHIBITED.

DIMENSIONS ARE IN INCHES
TOLERANCES:
FRACTIONAL ± 1/64
ANGULAR: MACH ± 0.5°
TWO PLACE DECIMAL ± 0.01
THREE PLACE DECIMAL ± 0.005

FINISH: NONE
QTY:

ECONOCORP INC.

TITLE
RH LOAD SPARTAN BEER TRAY PACKER

DRAWN BY	DATE DRAWN	SIZE	DWG. NO.	REV.
LG	11/25/20	B	11199-500	

SIMILAR TO: - | USED ON: | SCALE: 1:32 | SHEET 1 OF 1

\\Econoserver\solidworks\11100\11199 K3\
LAST SAVED: 3/16/2021 2:36:41 PM