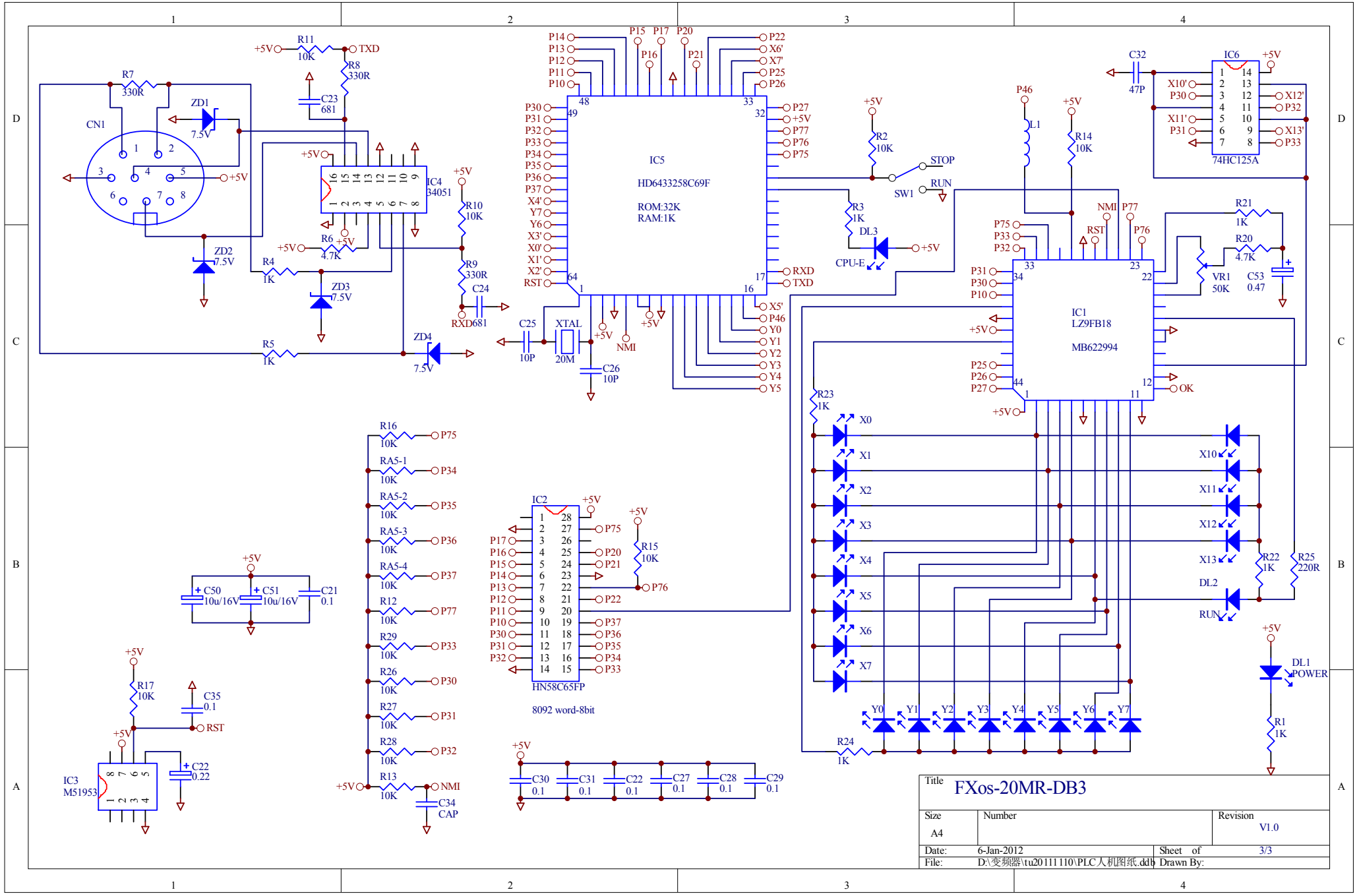
IC5
HD6433258C69F
ROM:32K
RAM:1K
IC1
LZ9FB18
MB622994
IC2
HN58C65FP
8092 word-8bit
IC3
M51953
IC4
34051
IC6
74HC125A
CN1
XTAL
20M
STOP
RUN
SW1
CPU-E
DL1
POWER
DL2
RUN
Title
FXos-20MR-DB3
Size
A4
Number
Revision
V1.0
Date:
6-Jan-2012
Sheet of
3/3
File:
D:\变频器\tu20111110\PLC人机图纸.ddb
Drawn By: