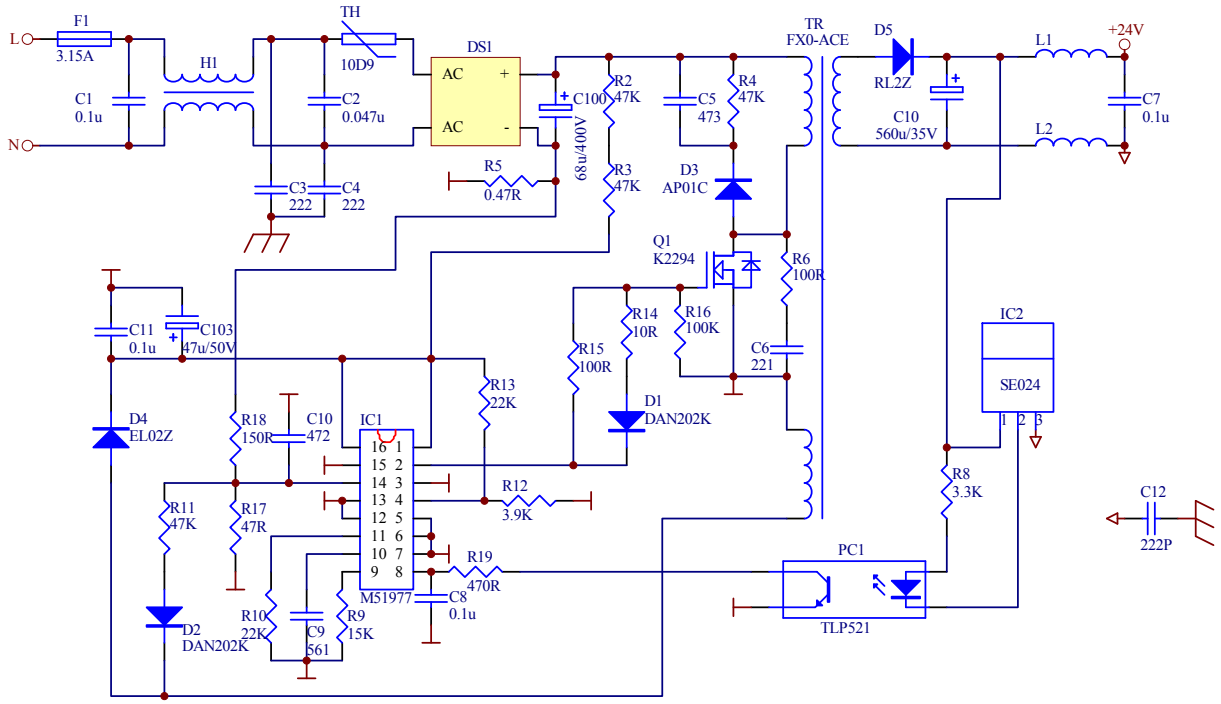

Title	FXos-20MR-DB1		
Size A4	Number		Revision V1.0
Date:	6-Jan-2012	Sheet of	1/3
File:	D:\变频器\tu20111110\PLC人机图纸.ddb	Drawn By:	