Multiplexer

- There is a neat trick to obtain a more efficient method for implementing a Boolean function of *n* variables with a multiplexer that has *n* - 1 selection inputs
- The first *n* - 1 variables of the function are connected to the selection inputs of the multiplexer
- The remaining single variable of the function is used for the data inputs
- Say we have a three variable function F(x,y,z)
- We take a 4to1 MUX (with two input select lines) and each data input of the multiplexer will be *z*, *z'*, 1, or 0

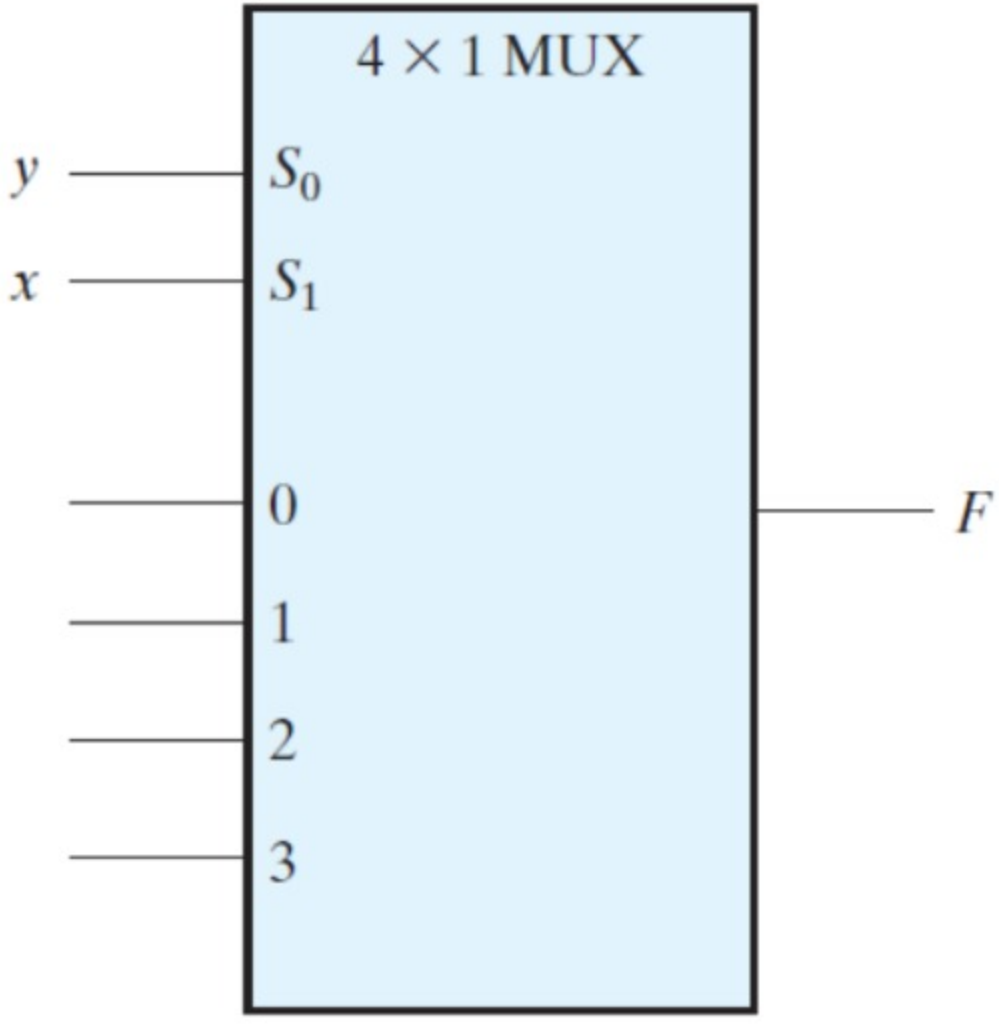

Multiplexer

- Consider the function:

$$F(x,y,z) = \sum(1,4,5,6)$$

- This function of three variables can be implemented with a four-to-one-line multiplexer
- The two variables *x* and *y* are applied to the selection lines in that order; *x* is connected to the S_1 input and *y* to the S_0 input
- The values for the data input lines are determined from the truth table of the function
- When *xy* = 00, output *F* is equal to *z* because *F* = 0 when *z* = 0 and *F* = 1 when *z* = 1
- This requires that variable *z* be applied to data input 0
- In a similar fashion, we can determine the required input to data lines 1, 2, and 3 from the value of *F* when *xy* = 01, 10, and 11, respectively

X	Y	Z	F
0	0	0	0
0	0	1	1
0	1	0	0
0	1	1	0
1	0	0	1
1	0	1	1
1	1	0	1
1	1	1	0

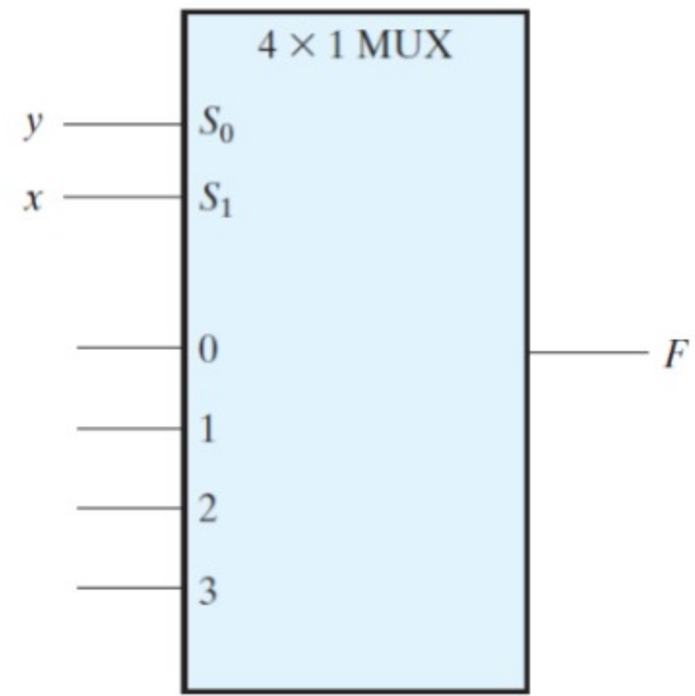

Multiplexer

- The general procedure for implementing any Boolean function of *n* variables with a multiplexer with *n* - 1 selection inputs and 2^{n-1} data inputs follows from the previous example

1. To begin with, Boolean function is listed in a truth table
2. Then the most significant *n* - 1 variables in the table are applied to the selection inputs of the multiplexer
3. For each combination of the selection variables, we evaluate the output as a function of the last variable
4. This function can be 0, 1, the variable, or the complement of the variable
5. These values are then applied to the data inputs in the proper order

$$F(A,B,C,D) = \sum(1, 3, 4, 11, 12, 13, 14, 15)$$

Multiplexer

- The general procedure for implementing any Boolean function of *n* variables with a multiplexer with *n* - 1 selection inputs and 2^{n-1} data inputs follows from the previous example

$$F(A,B,C,D) = \sum(1, 3, 4, 11, 12, 13, 14, 15)$$

1. To begin with, Boolean function is listed in a truth table
2. Then the most significant *n* - 1 variables in the table are applied to the selection inputs of the multiplexer
3. For each combination of the selection variables, we evaluate the output as a function of the last variable
4. This function can be 0, 1, the variable, or the complement of the variable
5. These values are then applied to the data inputs in the proper order
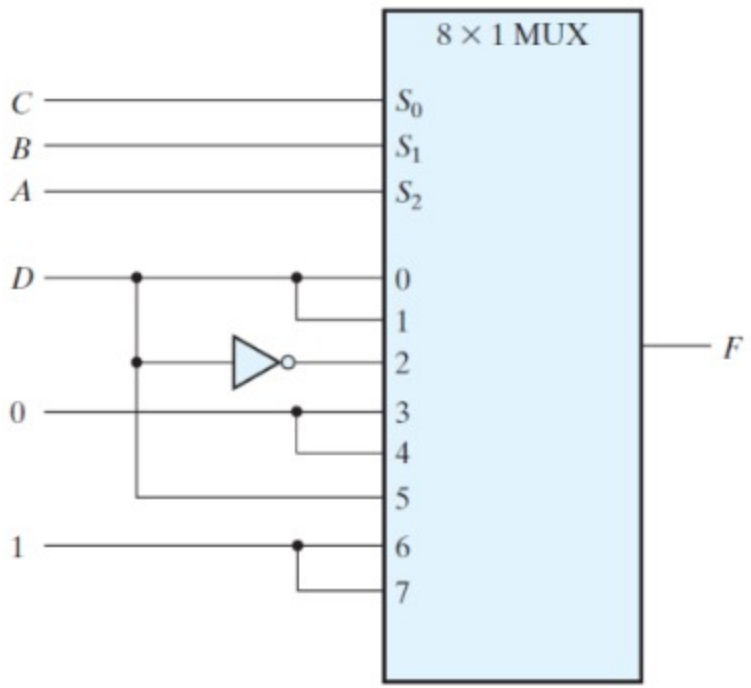
A	B	C	D	F	
0	0	0	0	0	$F = D$
0	0	0	1	1	
0	0	1	0	0	$F = D$
0	0	1	1	1	
0	1	0	0	1	$F = D'$
0	1	0	1	0	
0	1	1	0	0	$F = 0$
0	1	1	1	0	
1	0	0	0	0	$F = 0$
1	0	0	1	0	
1	0	1	0	0	$F = D$
1	0	1	1	1	
1	1	0	0	1	$F = 1$
1	1	0	1	1	
1	1	1	0	1	$F = 1$
1	1	1	1	1