DSM Lab 5 Report

> - Name: Vedant Rahul Kulkarni
> - Roll Number: 2024101140
> - Group Number: 6

Experiment 1

Objective

To design, assemble and test an Arithmetic and Logic Unit (ALU) using an two 8:1 multiplexers (`74151`), one quadruple 2:1 multiplexer (`74157`), and one quad-input XOR gate (`7486`).

The ALU's function table is as follows:

$F_2F_1F_0$	Function	Y_1	Y_0
000	zero	X	0
001	A or B	X	$A + B$
010	A and B	X	$A \cdot B$
011	A xor B	X	$A \oplus B$
100	A plus B	$A \cdot B$	$A \oplus B$
101	A minus B	$A' \cdot B$	$A \oplus B$
110	A plus B plus C	$(C \cdot (A + B)) + (C' \cdot (A \cdot B))$	$A \oplus B \oplus C$
111	A minus B minus C	$(C \cdot (A' + B)) + (C' \cdot (A' \cdot B))$	$A \oplus B \oplus C$

Electronic Components

- Digital Test Kit
- Wires
- 2 IC74151 (8:1 MUX)
- 1 IC74157 (2:1 MUX)
- 1 IC7486 (XOR)

Reference Circuit

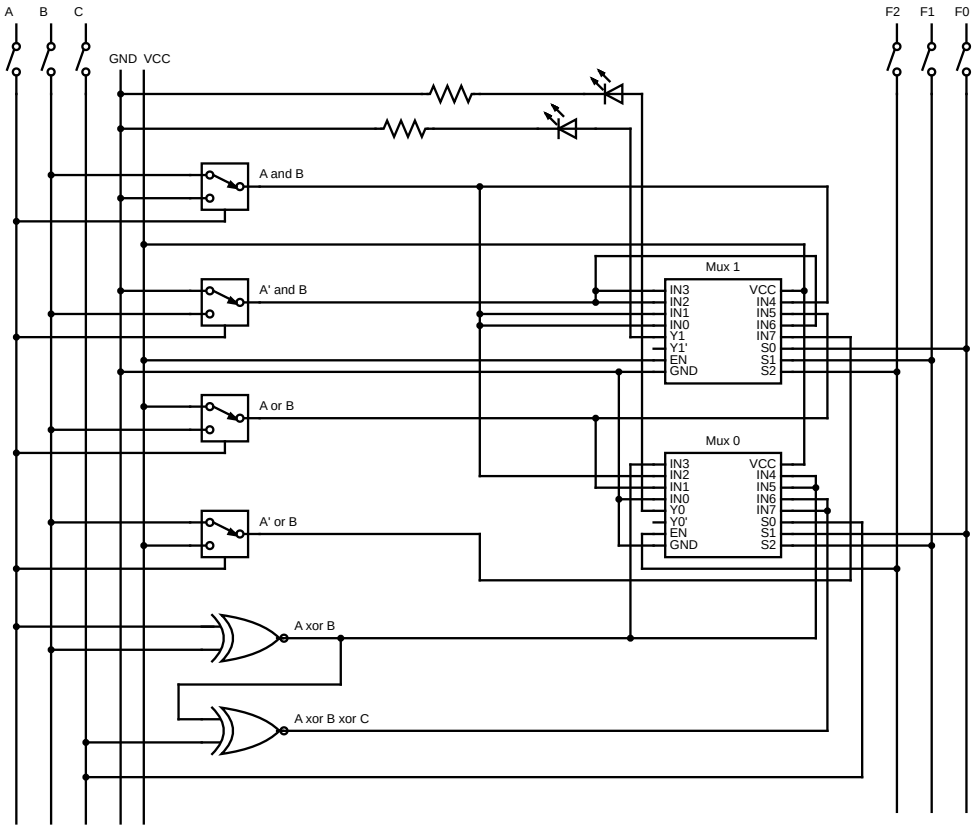

Procedure

1. Connect the digital kit to a power source.
2. Toggle the clock switch to `Fast`. A clock LED should light up and stay on.
3. Place the NOT IC, the two AND ICs, and the OR ICs horizontally on the breadboard.
4. Make the circuit connections according to the reference circuit diagram shown above.
5. Toggle the switches such that all combinations of inputs are covered for each function, and note the outputs.

Observations & Conclusions

The ALU works as intended. See the lab photo for an example of it being tested.

TinkerCAD Simulation

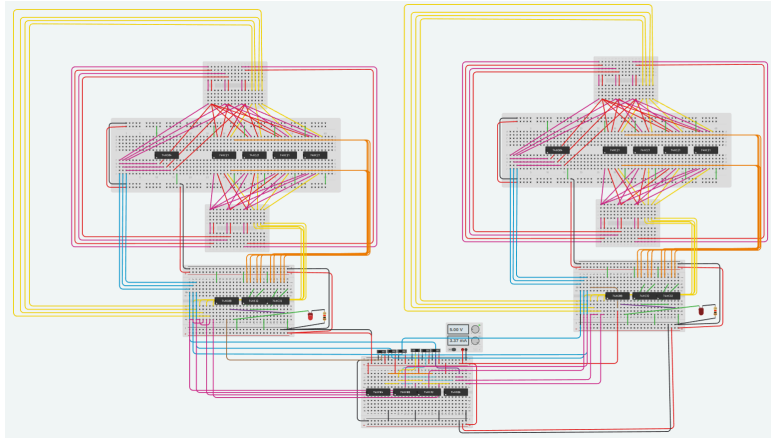

TinkerCAD Simulation of an ALU

Lab Photo

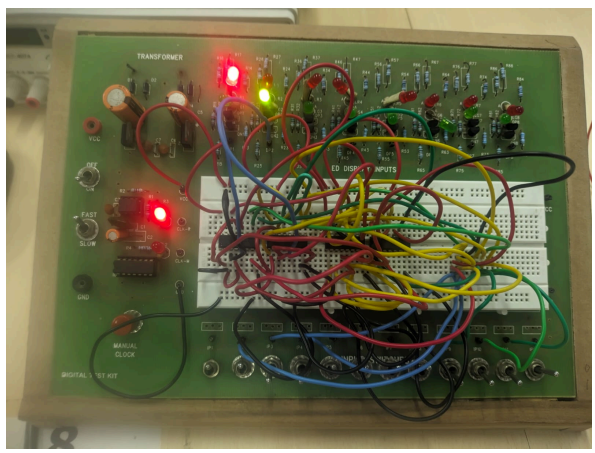

The ALU performing $0 - 1 - 1$, producing $\text{difference} = 0, \text{borrow} = 1$.