PIPER

Mission:

Piper Make Base Station

SIDE A

Assembly

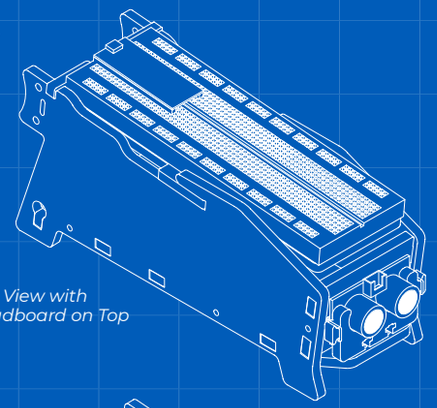

View with Breadboard on Top

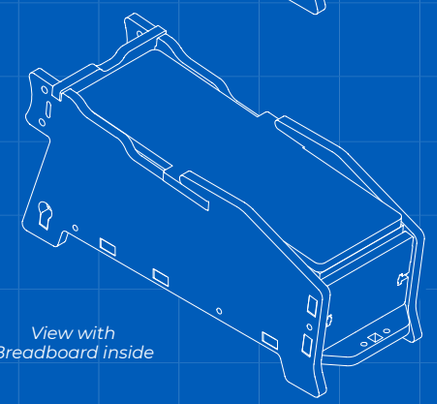

View with Breadboard inside

INVENTORY

1 Back	1 Lid with Breadboard
1 Front	1 Sensor Holder
1 Bottom	8 #4-40 Screws
2 Sides	8 Hex Nuts
1 O-Ring	

1

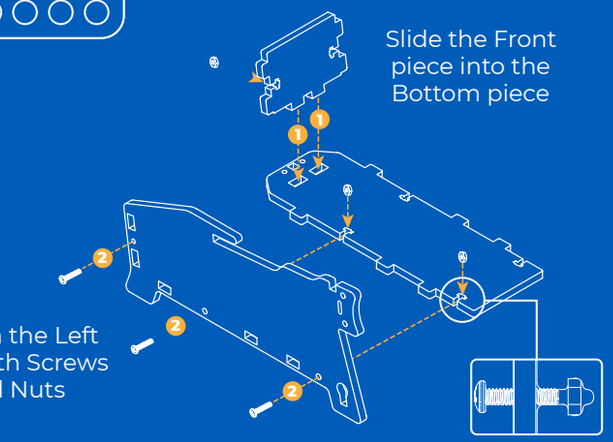

Slide the Front piece into the Bottom piece

Attach the Left side with Screws and Nuts

2

Slide the Back piece into the notch and keyhole

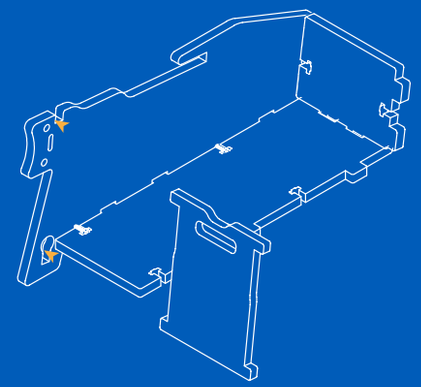

3

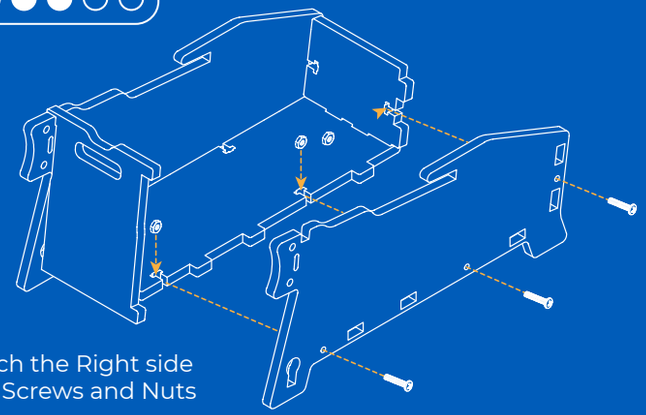

Attach the Right side with Screws and Nuts

4

Slide Lid into notches

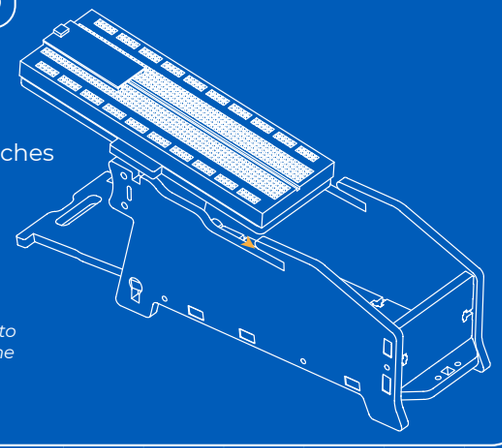

Back piece needs to be open to slide the lid in and out

5

Use O-Ring to attach Range Finder to Holder

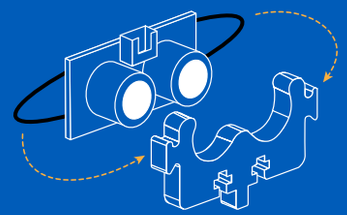

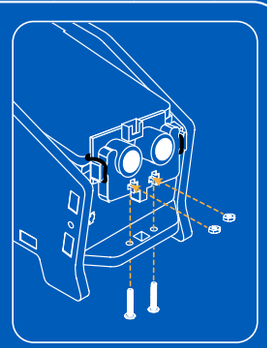

Attach to the front of your Base Station with Screws and Nuts

ASSEMBLY COMPLETE!

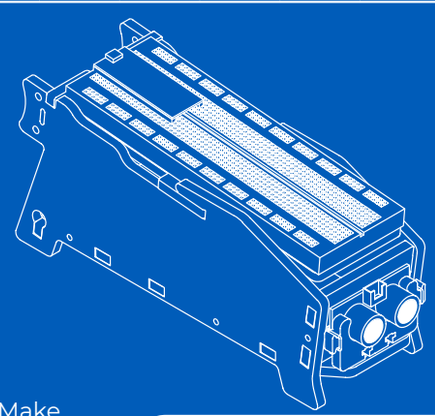

Head to Piper Make to continue your mission

make.playpiper.com

Piper Make Base Station Version 1.0.1

PIPER

Mission:

Piper Make Base Station

SIDE B

Disassembly

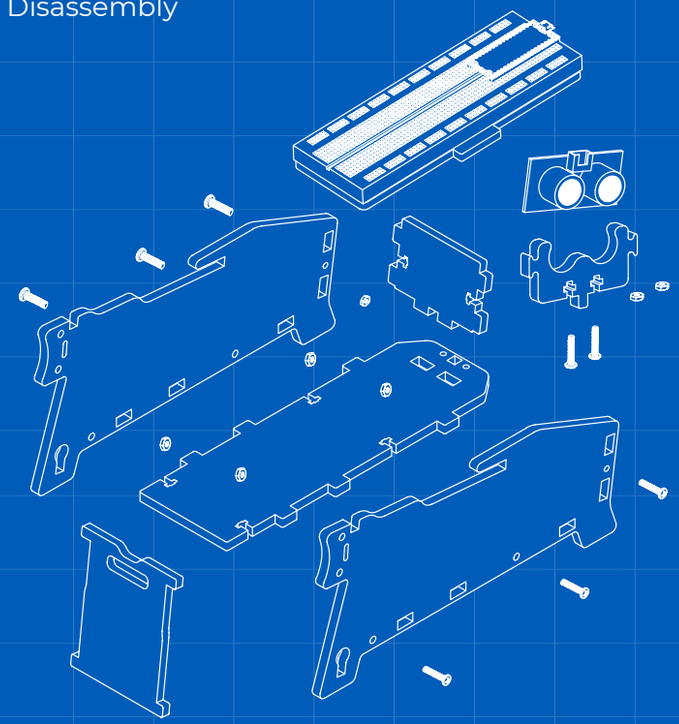

INVENTORY

1 Back	1 Lid with Breadboard
1 Front	1 Sensor Holder
1 Bottom	8 #4-40 Screws
2 Sides	8 Hex Nuts
1 O-Ring	

1

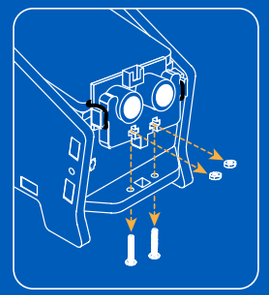

Dettach the Range Finder by removing Screws and Nuts

Remove O-Ring to detach Range Finder from Holder

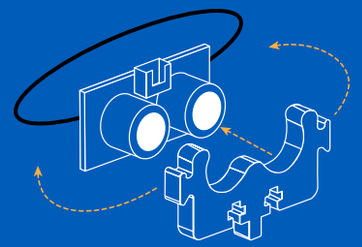

Place each item on its spot on the Components sheet

2

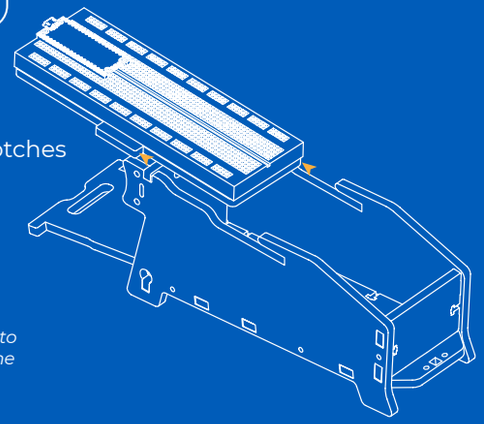

Slide Lid out of notches

Back piece needs to be open to slide the lid in and out

3

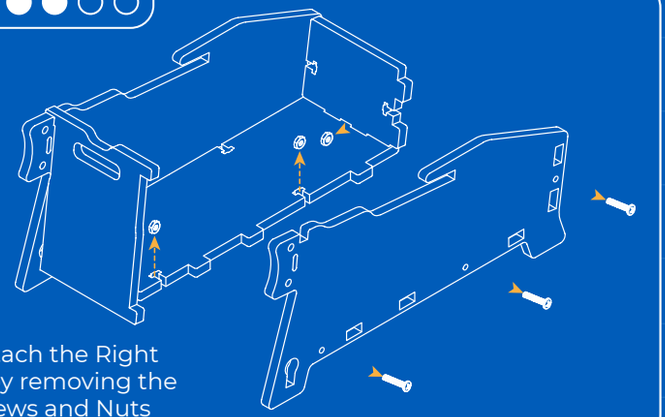

Dettach the Right side by removing the Screws and Nuts

4

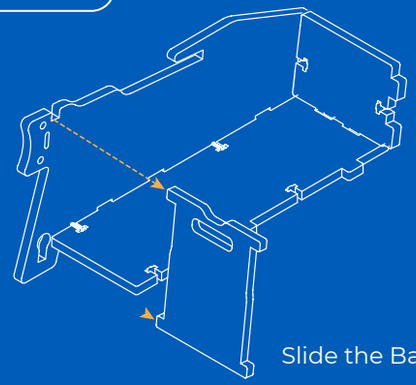

Slide the Back piece off

5

Dettach the Left side by removing the Screws and Nuts

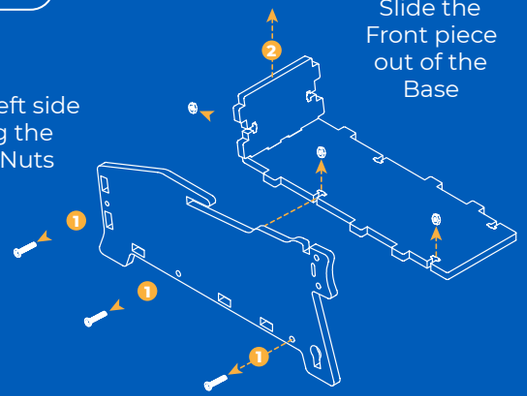

Slide the Front piece out of the Base

DISASSEMBLY COMPLETE!

If not already done, place each piece on its spot in the Componets sheet

Piper Make Base Station Version 1.0.1

Mission:

Piper Make
Base Station

Components Sheet

Gather and organize your supplies

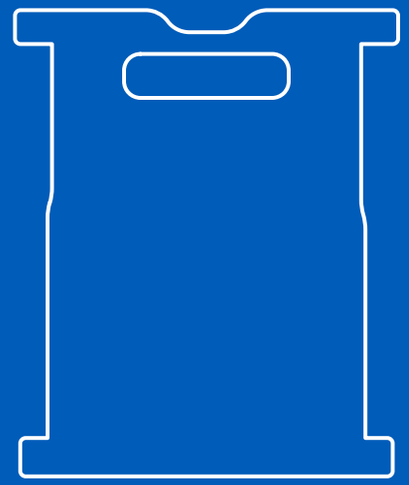

Back x 1

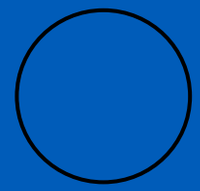

O-Ring x 1

Lid with Breadboard x 1

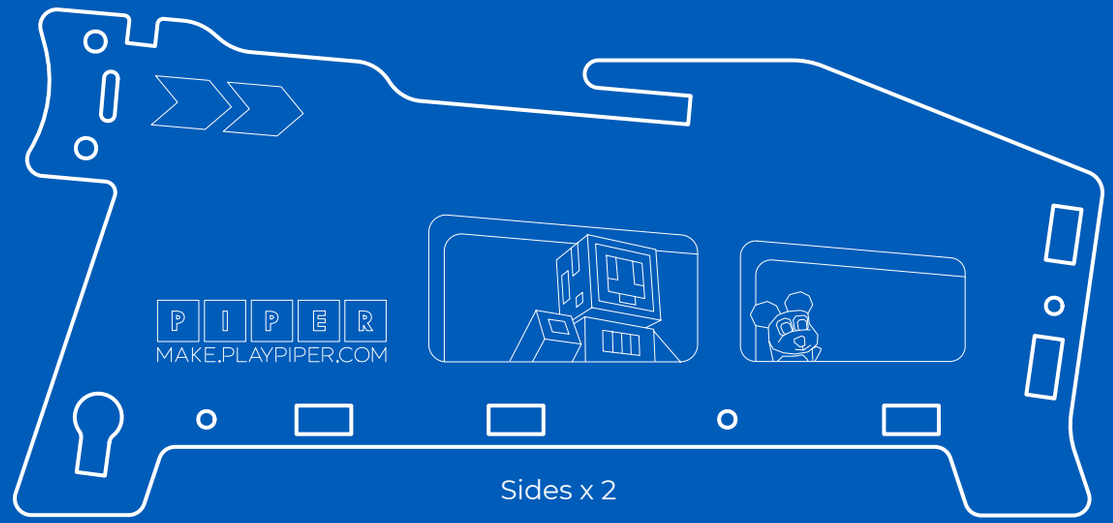

Sides x 2

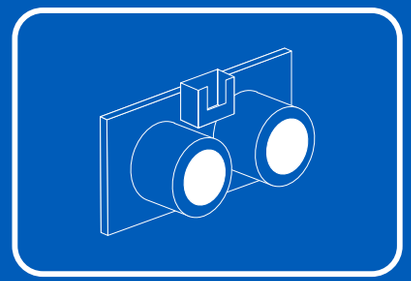

Ultrasonic Range Finder x 1

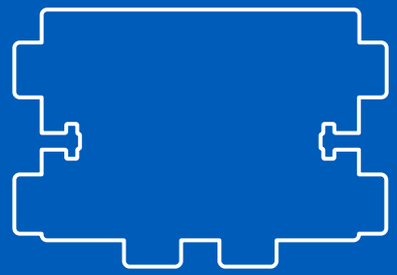

Front x 1

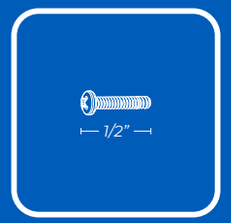

#4-40 Screw x 8

#4-40 Nut x 8

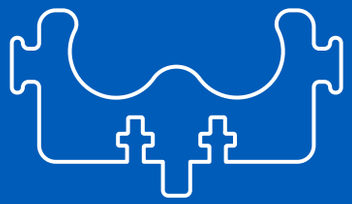

Range Finder Holder x 1

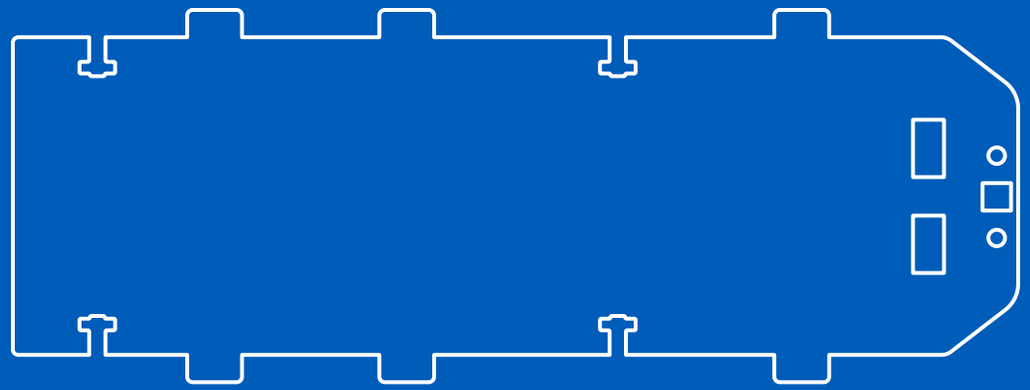

Bottom x 1

PIPER

Mission:

Piper Make Starter Supplies

Components Sheet

Gather and organize your supplies

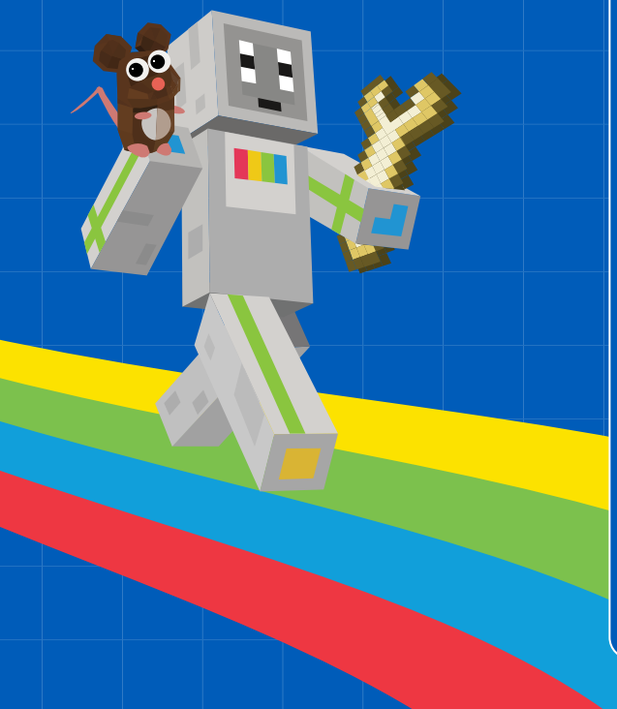

LEDs

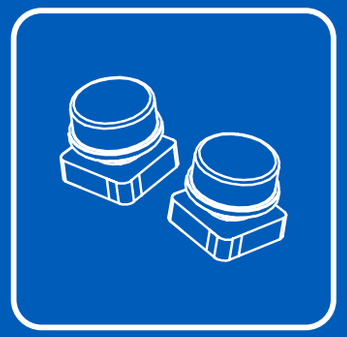

Buttons

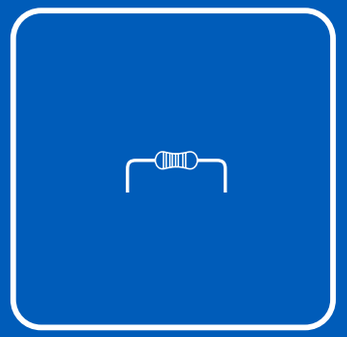

Resistors

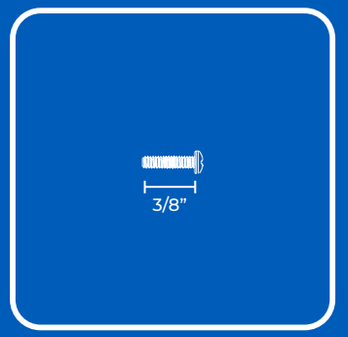

#4-40 Screws x 4

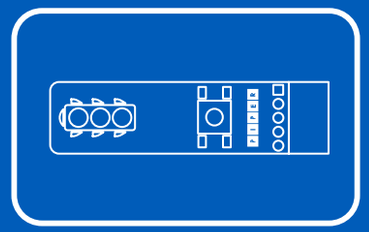

PCBA, Traffic Light x 1

USB-A to USB-C Adapter x 1

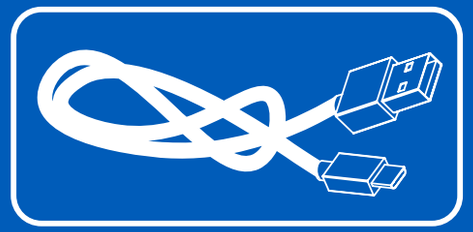

Mirco USB to USB-A Cable x 1

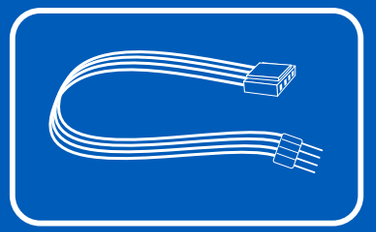

Grove to Male Cable x 1

Bar Graph LED x 1

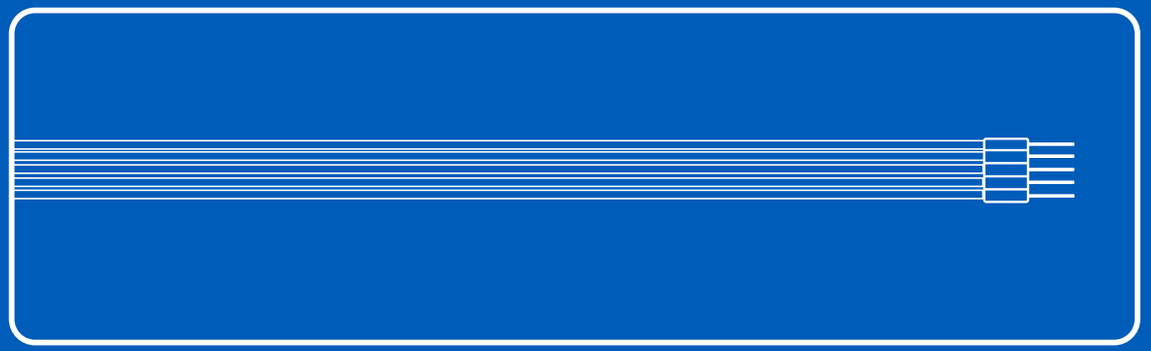

Jumper Wires