PIPER

Mission:

Piper Make Robotic Walker

SIDE A
Assembly

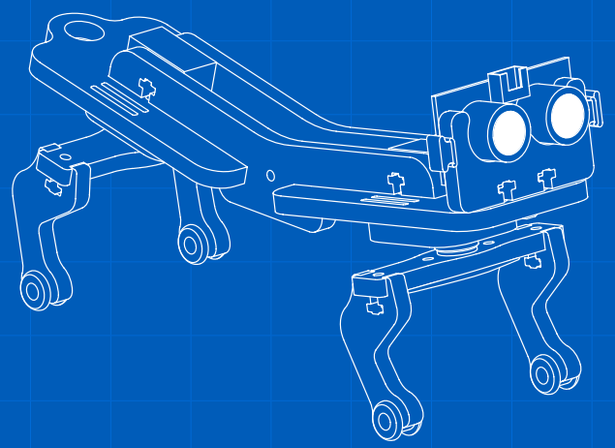

INVENTORY

1	Torso	2	FS90 Servo Motor
1	Trunk	6	3/8” #4-40 Screws (A)
4	Legs	2	Small Screws (B)
4	Grommet	4	3/4” #4-40 Screws (C)
2	Servo Horn	4	1/4” #4-40 Screws (D)
2	Servo Holder	10	#4-40 Hex Nuts
2	Spine	1	Ultrasonic Range Finder
2	Spline Horn	1	Ultrasonic Range Finder Holder
1	O-Ring		

1

Repeat 4× to install Grommets onto each Leg

2

Repeat 2× to attach Spline Horn to each Servo Horn with Screws

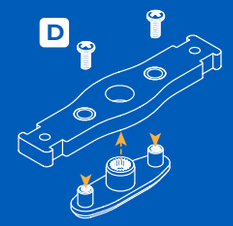

Attach Legs to Servo Horn with Screws and Nuts

Repeat 2× with all four legs

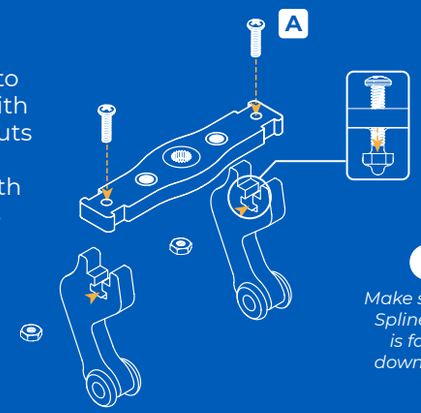

! *Make sure the Spline Horn is facing downwards*

3

Install the Spines on both the Torso and Trunk

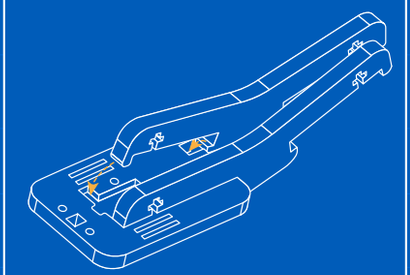

4

Install Torso and Trunk Servos so motors are facing OUTWARDS

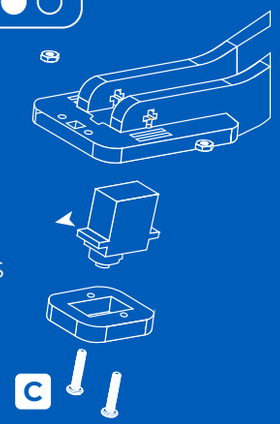

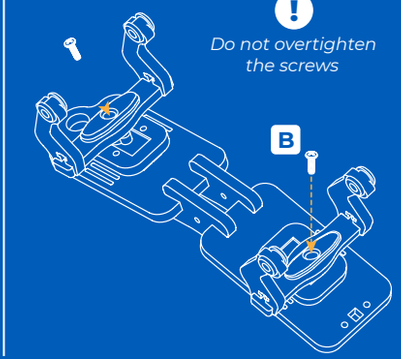

! *Do not overtighten the screws*

NOTE

The “knees” should face towards the tail of Walker, like a dog.

5

Use O-Ring to attach Range Finder to Holder

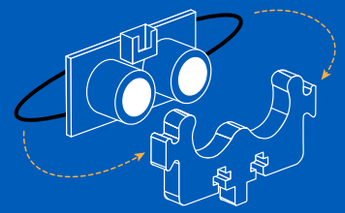

Insert Holder into Walker torso

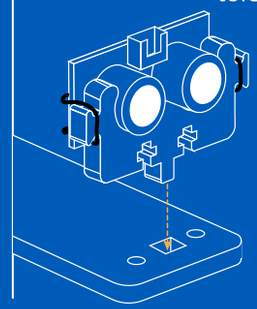

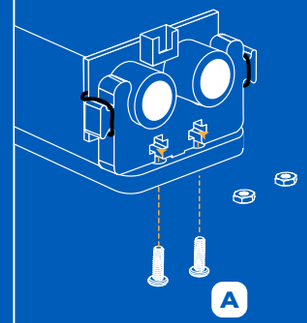

ASSEMBLY COMPLETE!

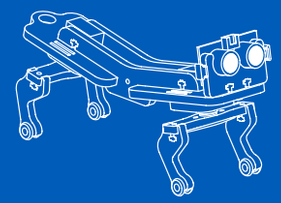

Head to Piper Make to continue your mission

make.playpiper.com

Mission:

Piper Make Robotic Walker

SIDE B

Disassembly

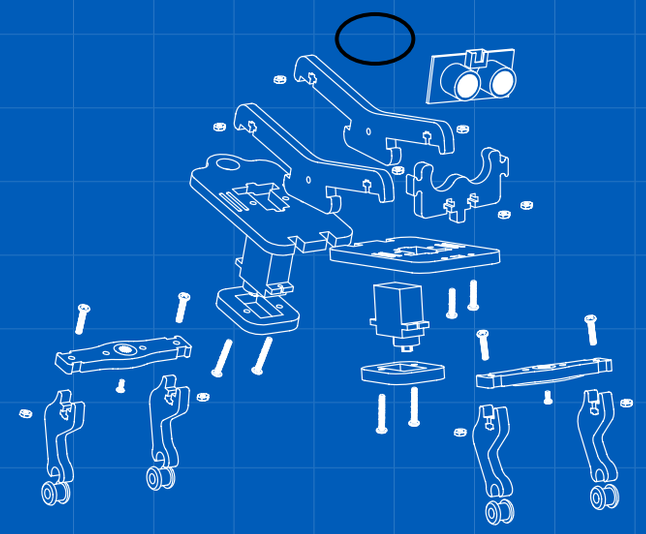

INVENTORY

1	Torso	2	FS90 Servo Motor
1	Trunk	6	3/8" #4-40 Screws (A)
4	Legs	2	Small Screws (B)
4	Grommet	4	3/4" #4-40 Screws (C)
2	Servo Horn	4	1/4" #4-40 Screws (D)
2	Servo Holder	10	#4-40 Hex Nuts
2	Spine	1	Ultrasonic Range Finder
2	Spline Horn	1	Ultrasonic Range Finder Holder
1	O-Ring		

1

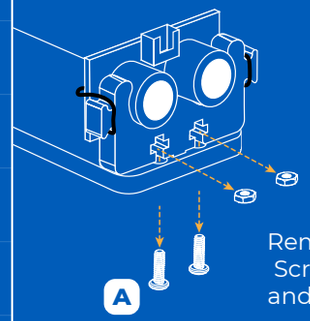

Remove Screws and Nut

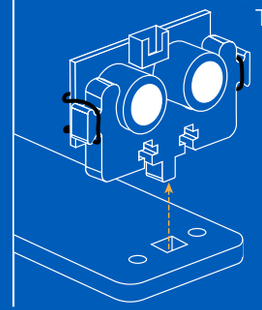

Detach Holder from Walker Torso

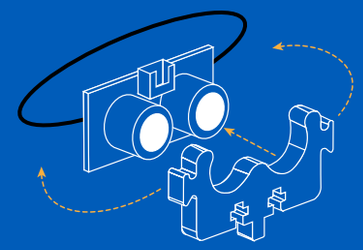

Remove O-Ring to detach Range Finder from Holder

Place each item on its spot on the Components sheet

2

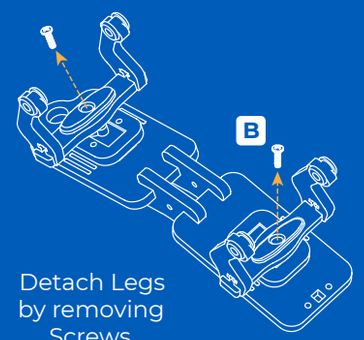

Detach Legs by removing Screws

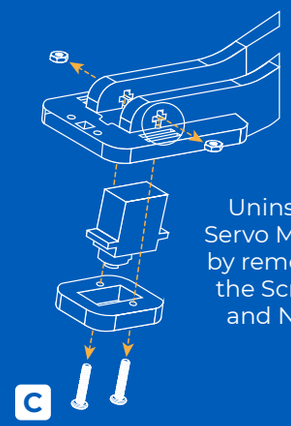

Uninstall Servo Motors by removing the Screws and Nuts

3

Detach the Spines from both the Torso and Trunk

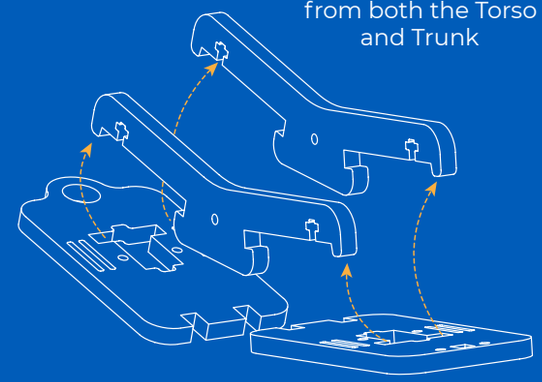

4

Deattach Legs from Servo Horn by removning Screws and Nuts

Repeat 2× with all four legs

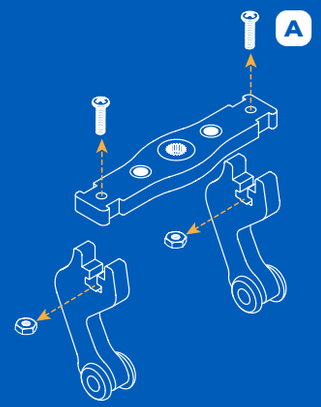

5

Remove Grommet from each Leg

Repeat 4×

DISASSEMBLY COMPLETE!

If not already done, place each piece on its spot on the Components sheet

Piper Make Robotic Walker - Version 1.2.0

PIPER

Mission:

Piper Make Robotic Walker

Components Sheet

Gather and organize your supplies

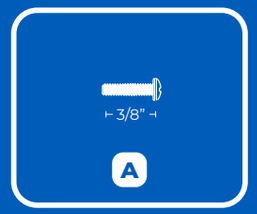

#4-40 Screw x 6

#4-40 Nut x 10

Servo Horn x 2

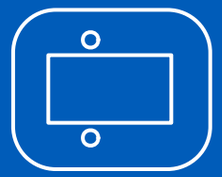

Servo Holder x 2

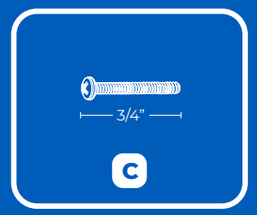

#4-40 Screw x 4

Grommet x 4

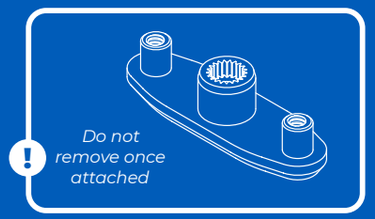

Spline Horn x 2

Legs x 4

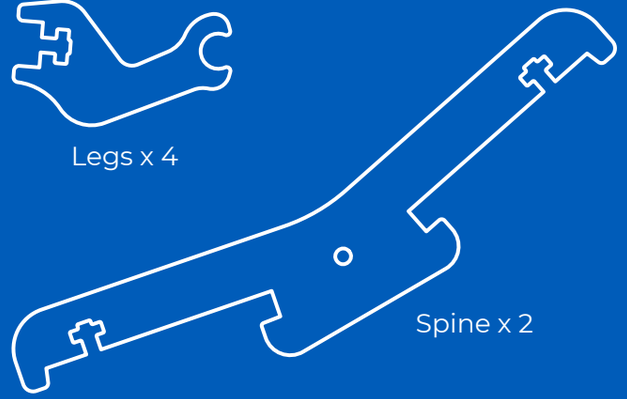

Spine x 2

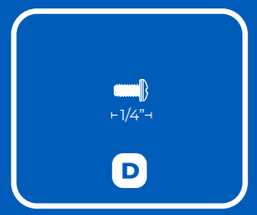

#4-40 Screw x 4

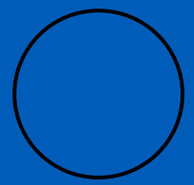

O-Ring x 1

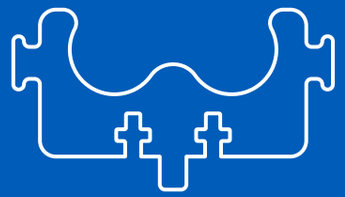

Range Finder Holder x 1

Servo Motors

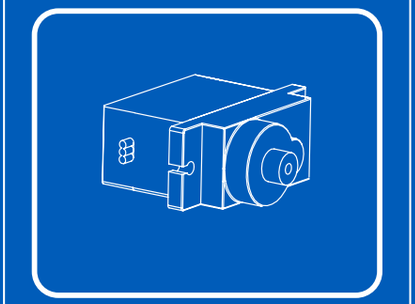

FS90R Servo Motor x 2

Small Screws x 2

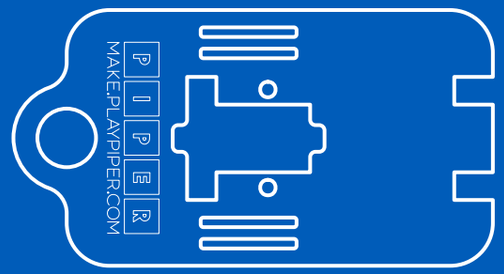

Trunk x 1

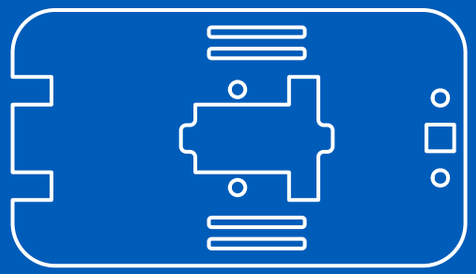

Torso x 1

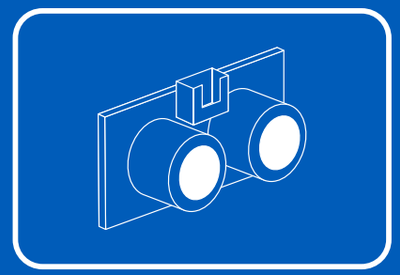

Ultrasonic Range Finder x 1