PIPER

Mission:

Piper Make Base Station

SIDE A

Assembly

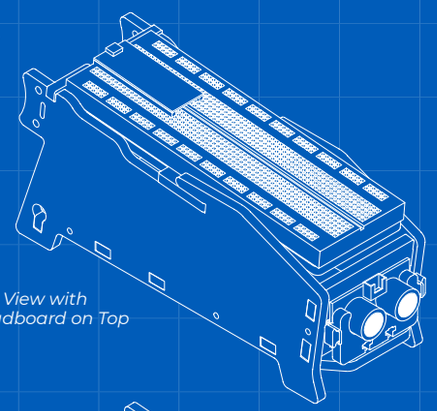

View with Breadboard on Top

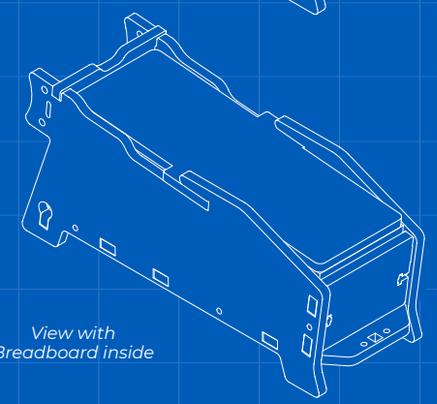

View with Breadboard inside

INVENTORY

1 Back	1 Lid with Breadboard
1 Front	1 Sensor Holder
1 Bottom	8 #4-40 Screws
2 Sides	8 Hex Nuts
1 O-Ring	

1

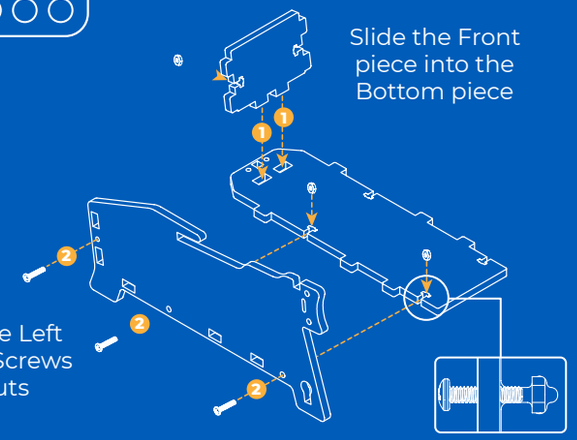

Slide the Front piece into the Bottom piece

Attach the Left side with Screws and Nuts

2

Slide the Back piece into the notch and keyhole

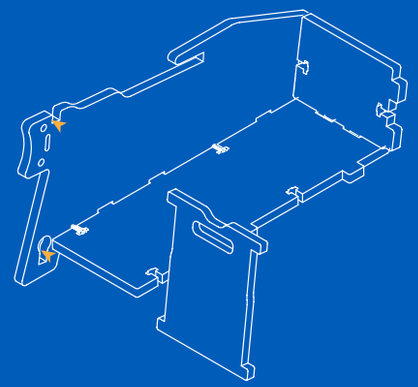

3

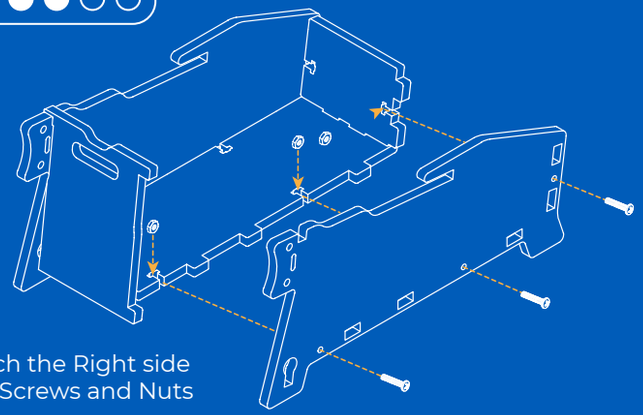

Attach the Right side with Screws and Nuts

4

Slide Lid into notches

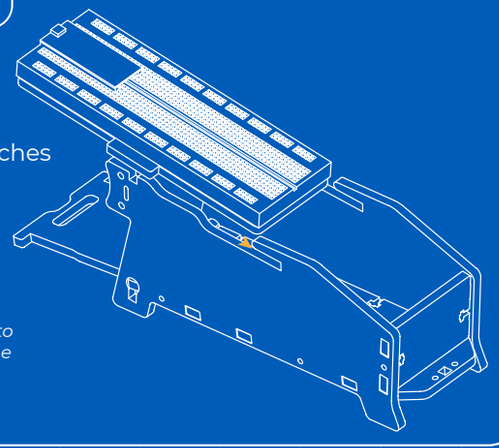

Back piece needs to be open to slide the lid in and out

5

Use O-Ring to attach Range Finder to Holder

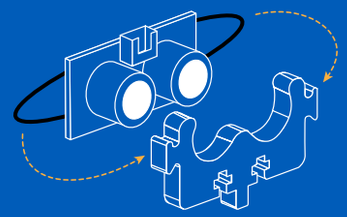

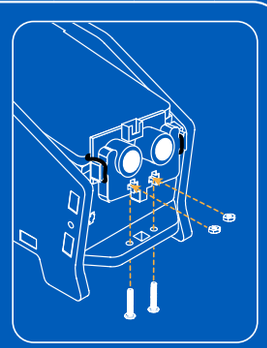

Attach to the front of your Base Station with Screws and Nuts

ASSEMBLY COMPLETE!

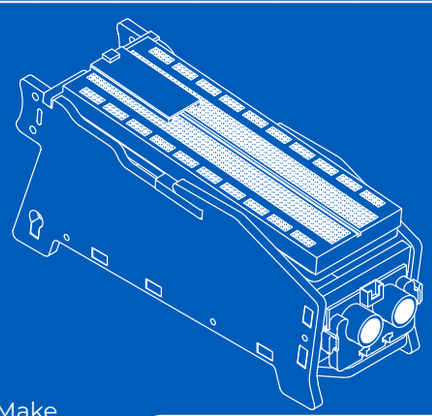

Head to Piper Make to continue your mission

make.playpiper.com

Piper Make Base Station Version 1.0.1