PIPER

Mission:

Piper Make Base Station

SIDE B

Disassembly

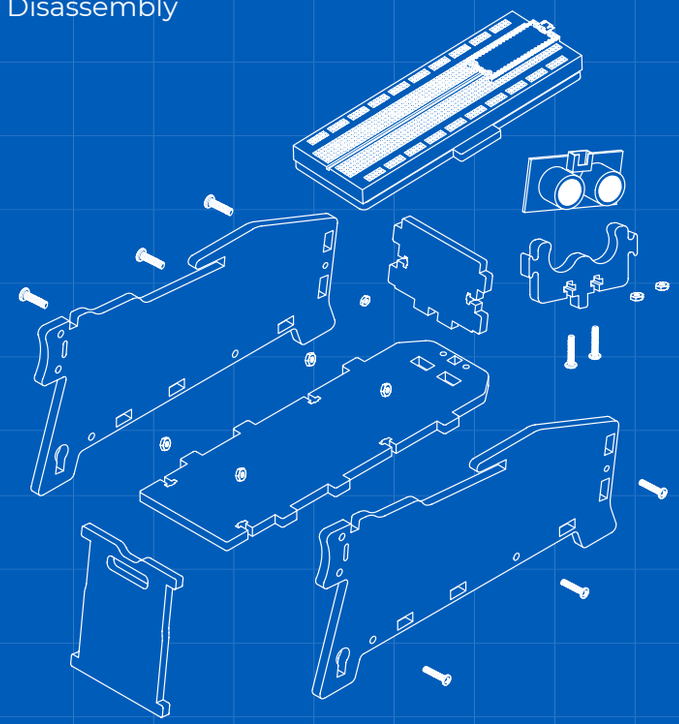

INVENTORY

1 Back	1 Lid with Breadboard
1 Front	1 Sensor Holder
1 Bottom	8 #4-40 Screws
2 Sides	8 Hex Nuts
1 O-Ring	

1

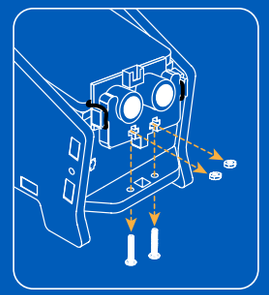

Dettach the Range Finder by removing Screws and Nuts

Remove O-Ring to detach Range Finder from Holder

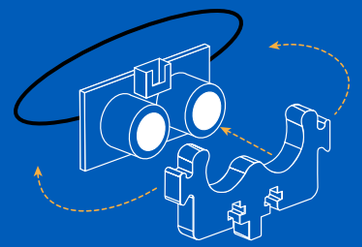

Place each item on its spot on the Components sheet

2

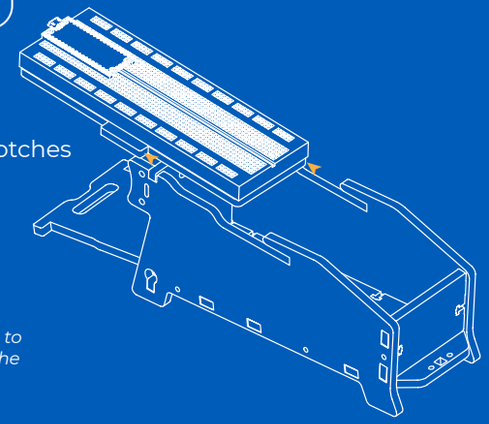

Slide Lid out of notches

Back piece needs to be open to slide the lid in and out

3

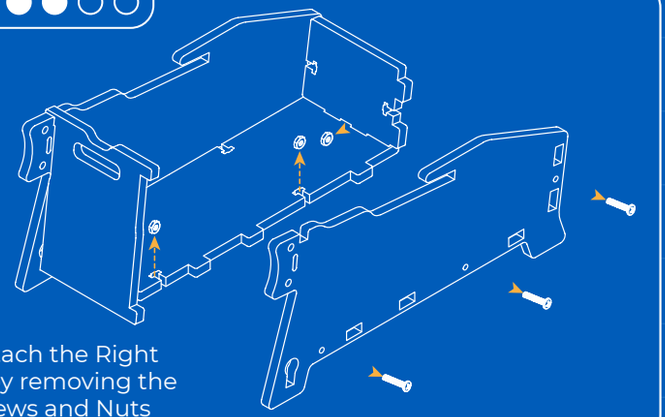

Dettach the Right side by removing the Screws and Nuts

4

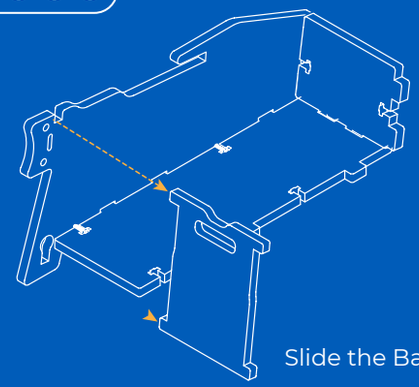

Slide the Back piece off

5

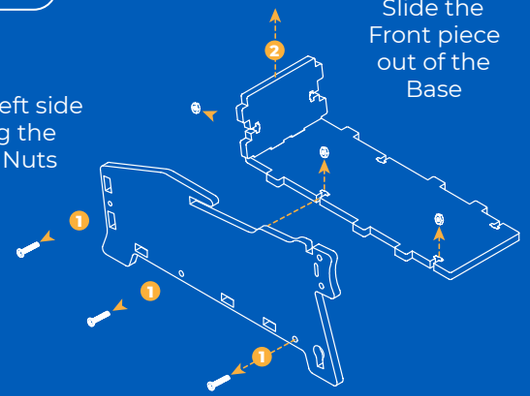

Dettach the Left side by removing the Screws and Nuts

Slide the Front piece out of the Base

DISASSEMBLY COMPLETE!

If not already done, place each piece on its spot in the Componets sheet

Piper Make Base Station Version 1.0.1