PIPER

Mission:

Piper Make Beam Break

SIDE A
Assembly

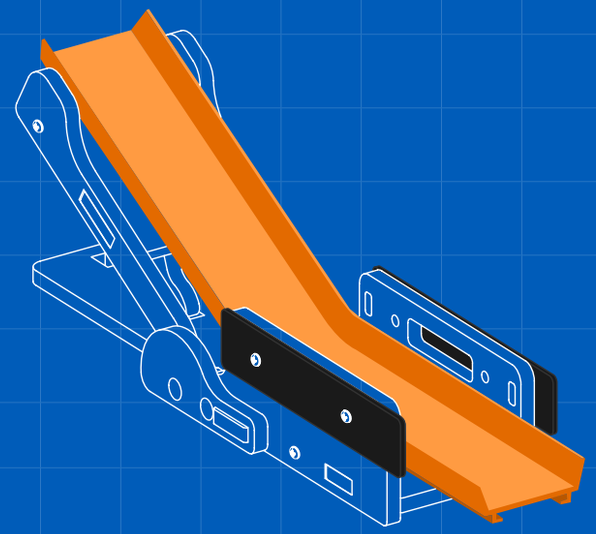

INVENTORY

1 Large Base	2 IR Beam Sensors
2 Side Pieces	1 Track Spacer
1 Ramp	1 Track Connector
2 Arm Pieces	2 Plastic Track
1 Small Base	8 1/2" Pan-Head Screws
1 Small Slope	4 1/4" Pan-Head Screws
1 Large Slope	2 Flat-Head Screws
2 Protractors	8 Hex Nuts
4 Gummy Foot	

1

Attach sensors to both side pieces with Pan-head Screws

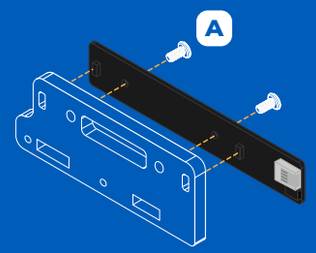

2

Attach Track Connector, Track Spacer and Small Base with Flat-head Screws

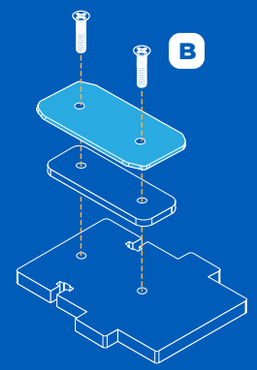

3

Attach Gummy Feet to corners of Large and Small Base pieces

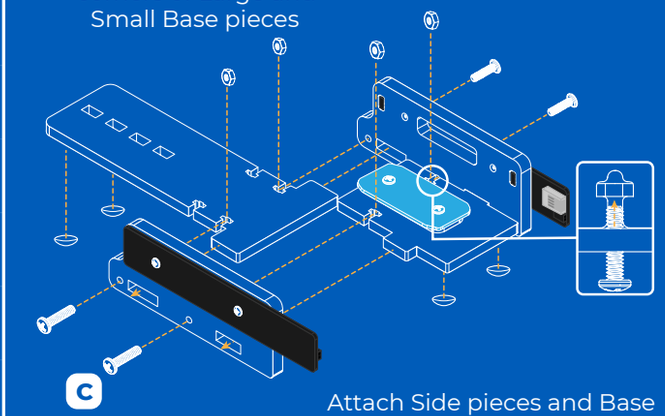

Attach Side pieces and Base pieces with Screws and Nuts

4

Connect both Arm pieces to the Ramp piece with Screws and Nuts

Then attatch Arms to the Large Base piece

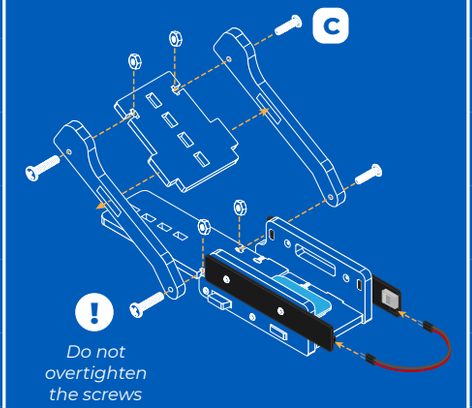

Insert Pin Cable to connect IR Beam Sensor

5

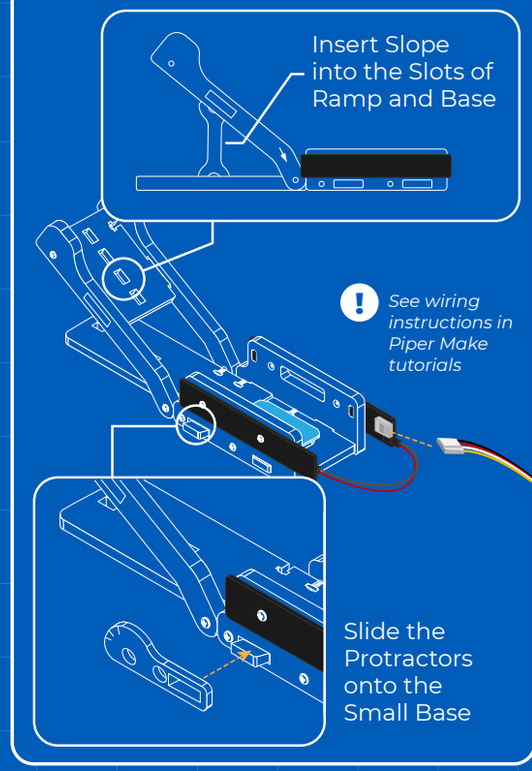

6

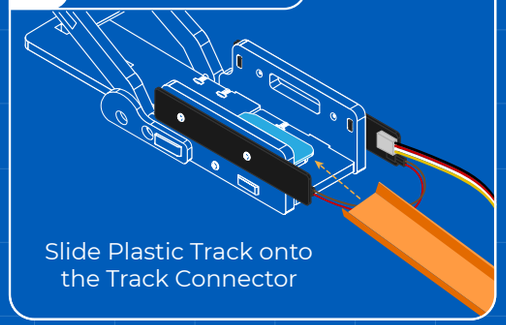

Slide Plastic Track onto the Track Connector

ASSEMBLY COMPLETE!

Head to Piper Make to continue your mission

make.playpiper.com

Piper Make Beam Break - Version 3.0.2