PIPER

Mission:

Piper Make Beam Break

SIDE B

Disassembly

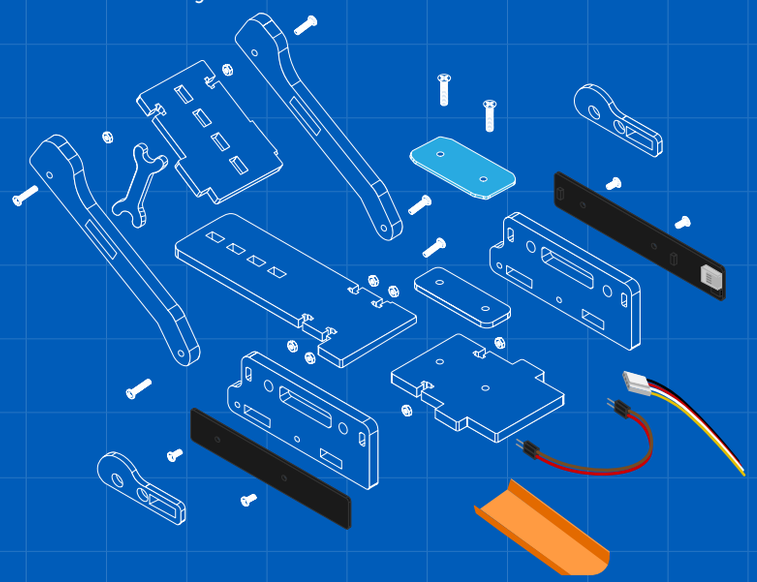

INVENTORY

1 Large Base	2 IR Beam Sensors
2 Side Pieces	1 Track Spacer
1 Ramp	1 Track Connector
2 Arm Pieces	2 Plastic Track
1 Small Base	8 1/2" Pan-Head Screws
1 Small Slope	4 1/4" Pan-Head Screws
1 Large Slope	2 Flat-Head Screws
2 Protractors	8 Hex Nuts
4 Gummy Foot	

1

Disconnect wiring

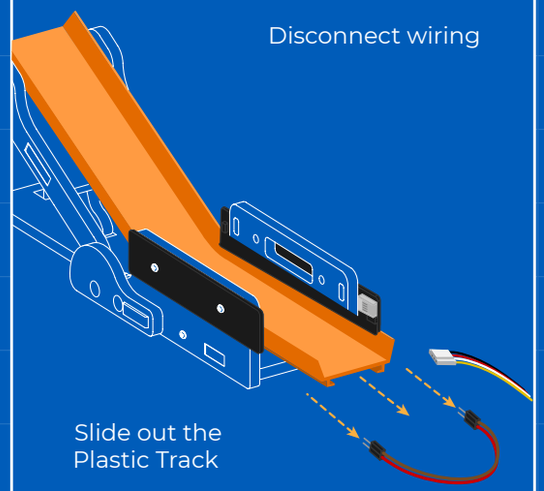

Slide out the Plastic Track

2

Remove Slope and Protractor Pieces

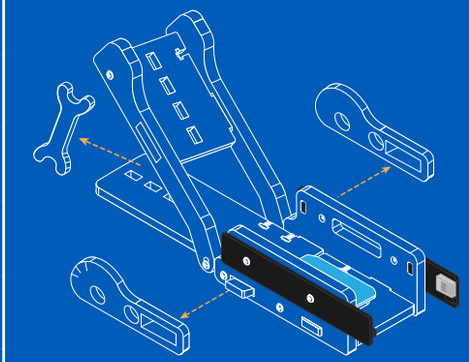

3

Unscew Screws to remove Arm and Ramp pieces

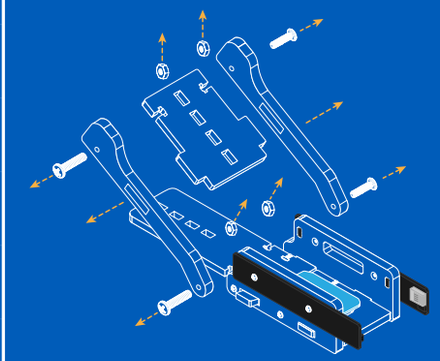

4

Remove Screws to remove Side pieces

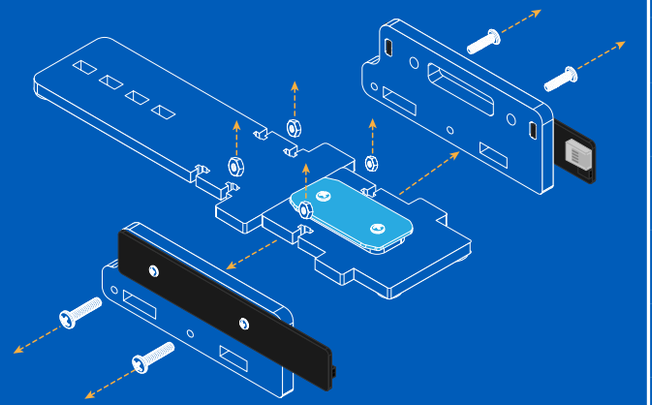

5

Dettach Sensors from both Side pieces by unscrewing screws

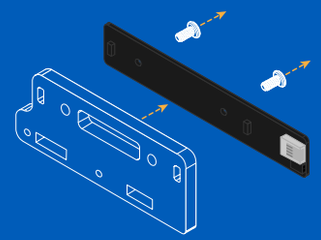

6

Remove Screws to seperate Track Connector, Track Spacer and Small Base pieces

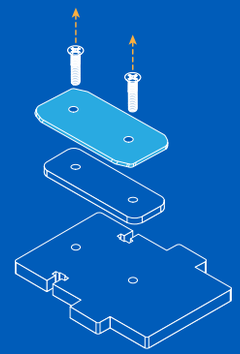

DISASSEMBLY COMPLETE!

If not already done, place each piece on its spot on the components sheet