PIPER

Mission Zero

Piper Computer Kit V4

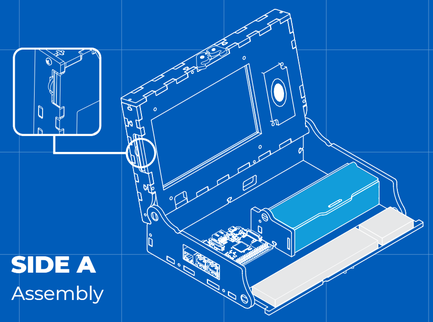

SIDE A
Assembly

ELECTRONIC INVENTORY

Display	Audio Cable
Speaker	HDMI Cable
Raspbery Pi	Breadboards
Battery	Buttons
Jumper Wire	LEDs
Power Harness	Switches/ Buzzers

MECHANICAL INVENTORY

26 1/2" Screws	22 Hex Nuts
4 3/8" Screws	4 Retainer Clips
4 1/4" Screws	

PREP

Use the USB-Ato USB-C Cable and Chargerto **charge the Battery** before building your Piper Computer Kit. This may take several hours.

*Note: USB Type of Cable and Charger May Vary.

USB to USB*

Charger*

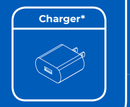

1.1

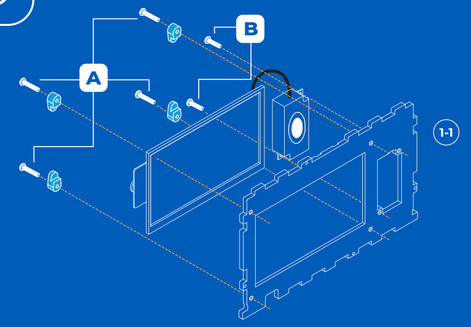

STEP 1.1

Display

Speaker

A — Screws ×4

B — Screws ×2

Retainer Clips ×4

After assembly, flip and connect Speaker to Display.

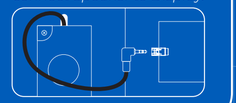

1.2

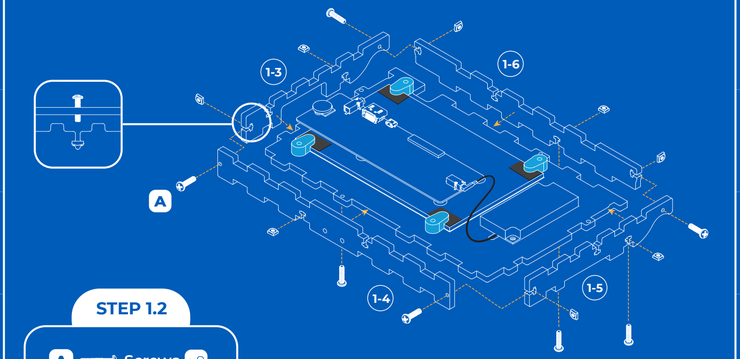

STEP 1.2

A — Screws ×8

Nuts ×8

2.1

STEP 2.1

A — Screws ×3

Nuts ×3

2.2

CAUTION: Sticking breadboards to the stenciled areas can only be done ONCE.

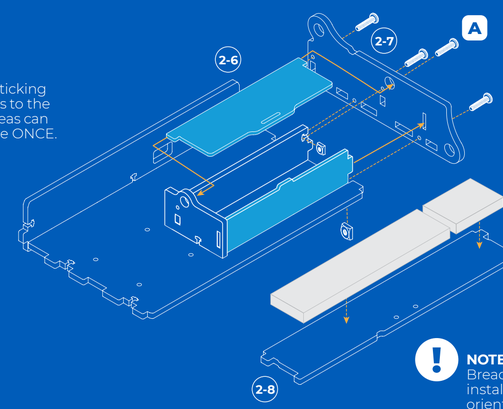

NOTE: The larger Breadboard can be installed in either orientation.

STEP 2.2

A — Screws ×4

Nuts ×4

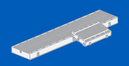

Breadboards

3

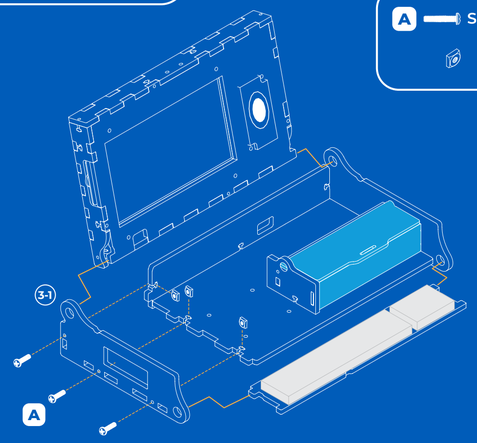

STEP 3

A — Screws ×3

Nuts ×3

4.1

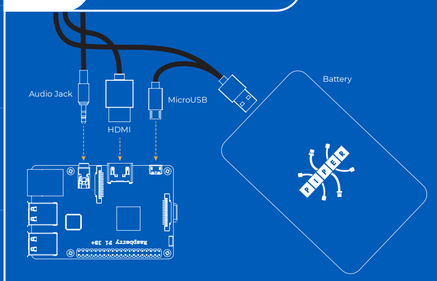

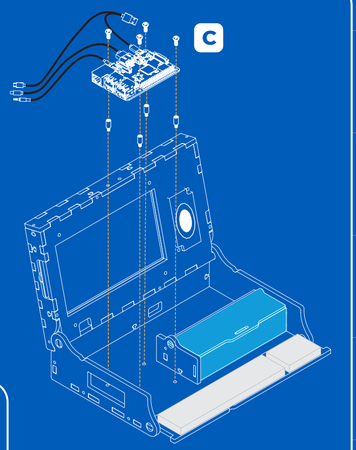

STEP 4.1

C — Screws ×4

Standoffs ×4

Raspberry Pi
*Version May Vary

4.2

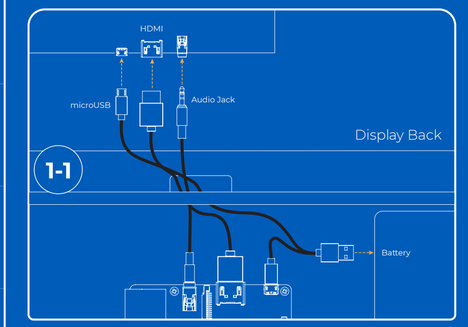

*Battery may or may not include Piper logo

BEFORE ATTACHING LID: To ensure proper cabling test the Raspberry Pi by plugging the Pi into the battery and powering on.

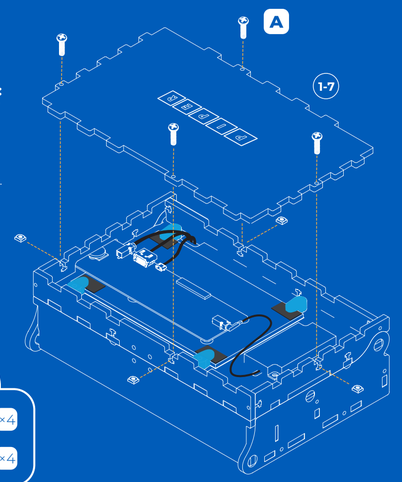

STEP 4.2

A — Screws ×4

Nuts ×4

5

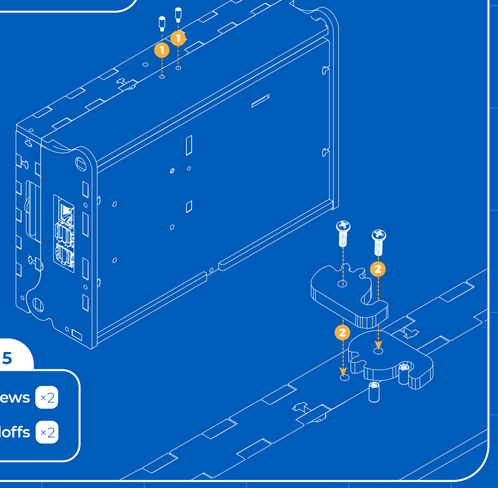

STEP 5

B — Screws ×2

Standoffs ×2