PIPER

Mission Zero

Piper Computer Kit V4

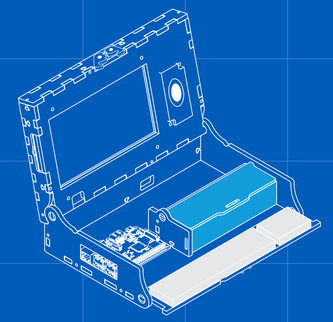

SIDE B
Disassembly

1

Place each item on its spot on the Components sheet

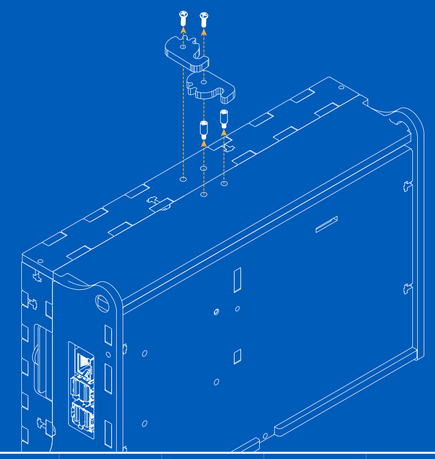

2.1

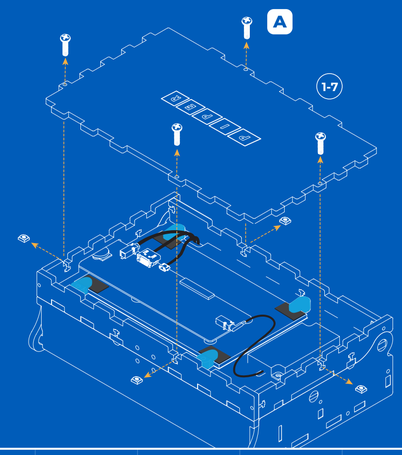

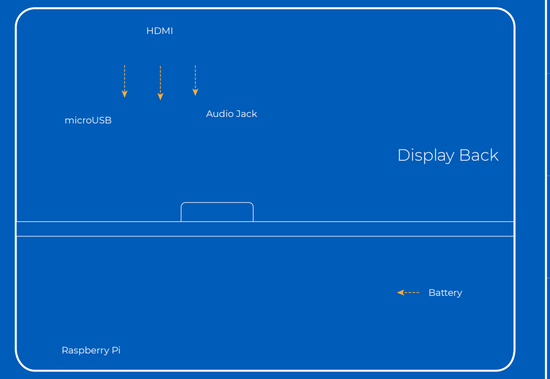

2.2

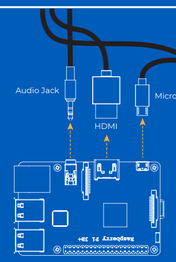

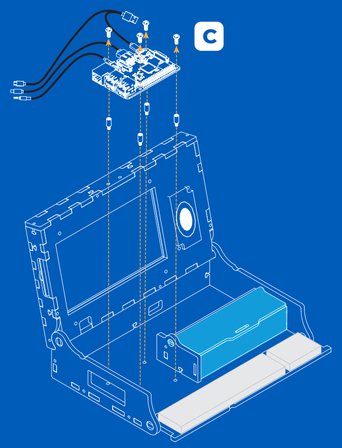

3

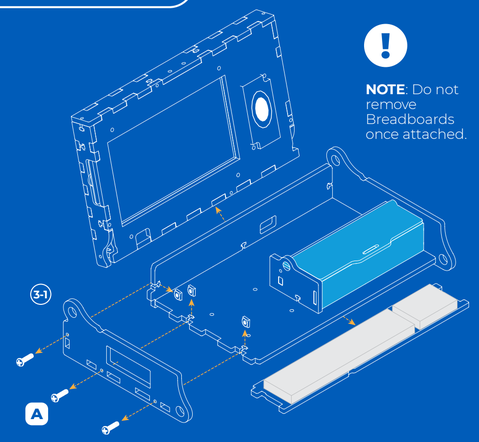

NOTE: Do not remove Breadboards once attached.

4.1

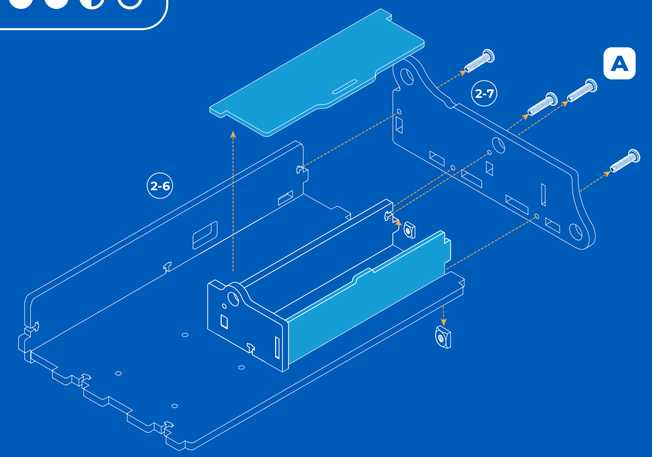

4.2

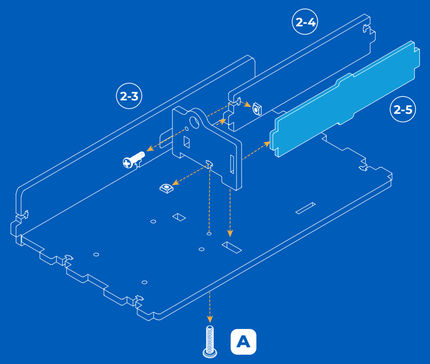

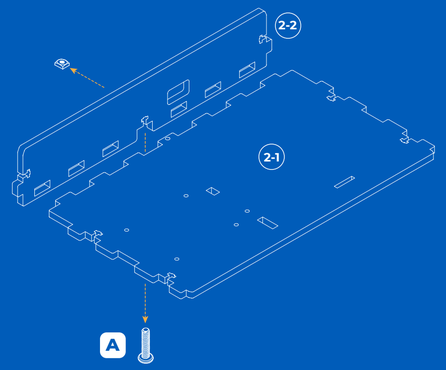

5.1

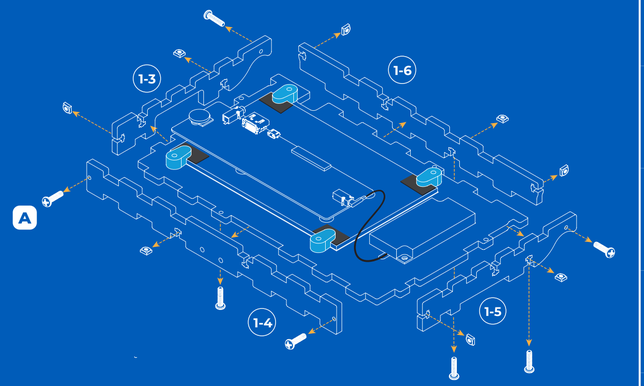
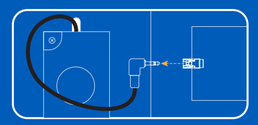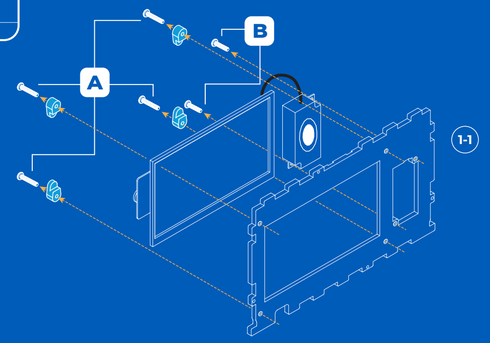
5.2