PIPER

Mission:

Piper Make Robotic Rover

SIDE B

Disassembly

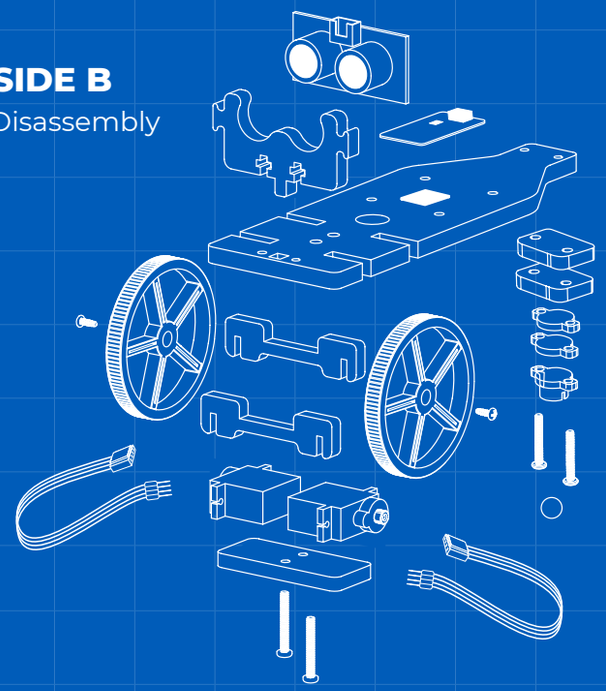

INVENTORY

- 1 Base
- 2 Motor Spacers
- 1 Motor Holder
- 2 #1 Spacers
- 2 #2 Spacers
- 2 FM90 Geared Motors
- 1 Motor Module
- 2 Wheels and Rims
- 2 4-Pin Cables
- 1 Range Finder Holder
- 1 Ball and Holder
- 2 #4-40 Screws (A)
- 2 #2-56 Screws (B)
- 2 #4-40 Screws (C)
- 2 Small Screws (D)
- 2 #4-40 Nuts
- 1 O-Ring
- 1 Velcro Pieces

1

Detach Motor Module from Base

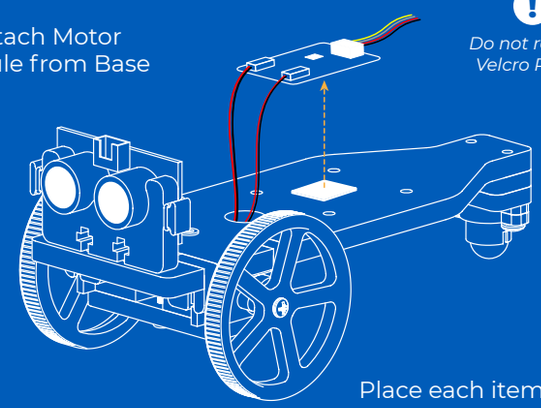

! *Do not remove Velcro Pieces*

Disconnect wires from Motor Module

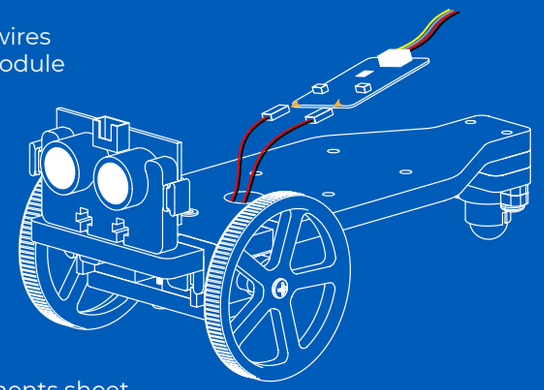

Place each item on its spot on the Components sheet

2

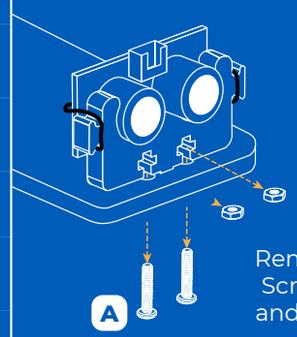

A

Remove Screws and Nut

Detach Holder from Rover Base

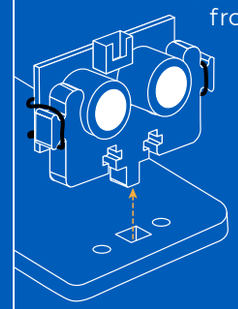

Remove O-Ring to detach Range Finder from Holder

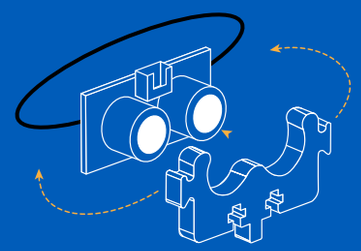

3

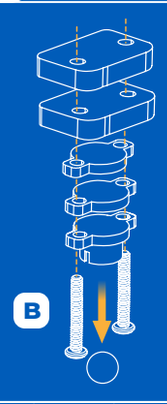

B

Remove Ball from Holder

Remove Screws

Reinsert Ball into Holder for storage

4

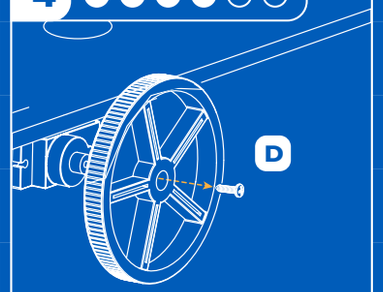

D

Detach Wheels from the Motors by removing Screws

5

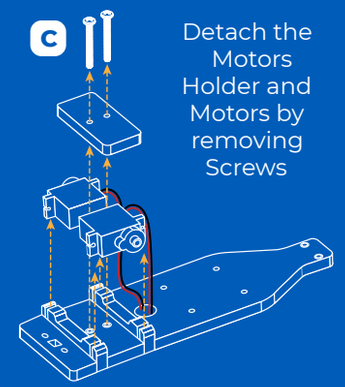

C

Detach the Motors Holder and Motors by removing Screws

6

Remove Motor Spacers from Base

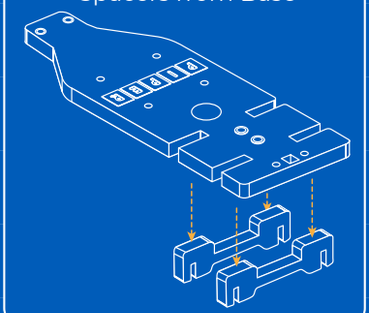

DISASSEMBLY COMPLETE!

If not already done, place each piece on its spot on the Components sheet

Piper Make Robotic Rover - Version 2.0.0