PIPER

Mission:

Piper Make Robotic Walker

SIDE A
Assembly

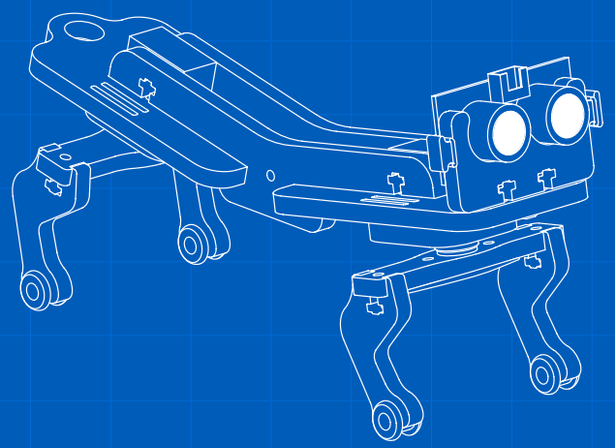

INVENTORY

1 Torso	**2** FS90 Servo Motor
1 Trunk	**6** 3/8” #4-40 Screws (A)
4 Legs	**2** Small Screws (B)
4 Grommet	**4** 3/4” #4-40 Screws (C)
2 Servo Horn	**4** 1/4” #4-40 Screws (D)
2 Servo Holder	**10** #4-40 Hex Nuts
2 Spine	**1** Ultrasonic Range Finder
2 Spline Horn	**1** Ultrasonic Range Finder Holder
1 O-Ring	

1

Repeat 4× to install Grommets onto each Leg

2

Repeat 2× to attach Spline Horn to each Servo Horn with Screws

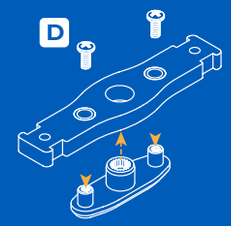

Attach Legs to Servo Horn with Screws and Nuts

Repeat 2× with all four legs

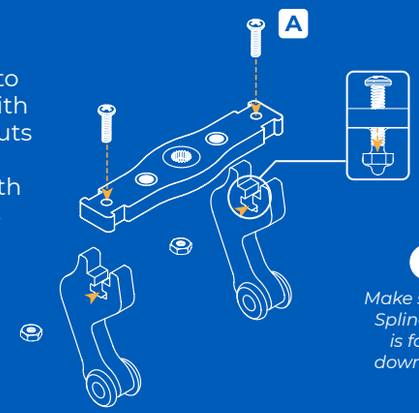

! *Make sure the Spline Horn is facing downwards*

3

Install the Spines on both the Torso and Trunk

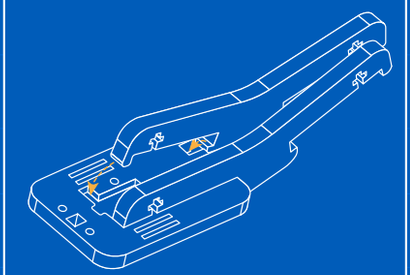

4

Install Torso and Trunk Servos so motors are facing OUTWARDS

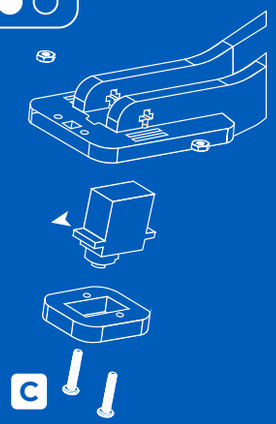

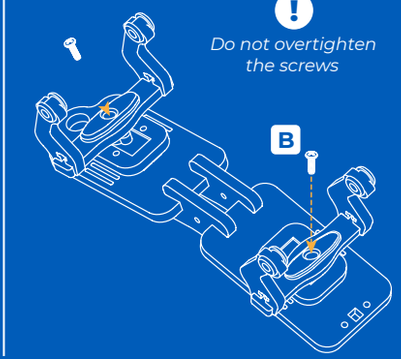

! *Do not overtighten the screws*

NOTE

The “knees” should face towards the tail of Walker, like a dog.

5

Use O-Ring to attach Range Finder to Holder

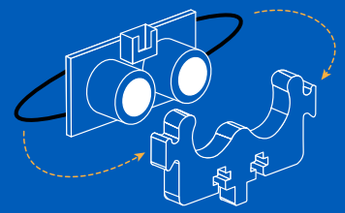

Insert Holder into Walker torso

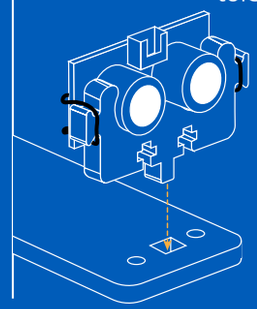

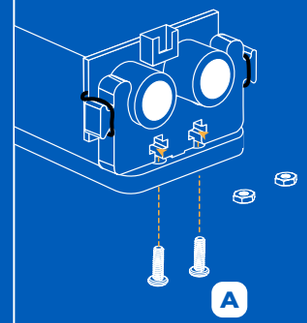

ASSEMBLY COMPLETE!

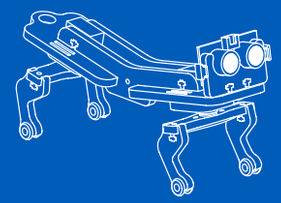

Head to Piper Make to continue your mission

make.playpiper.com

Piper Make Robotic Walker - Version 1.2.0