Mission:

Piper Make Robotic Walker

SIDE B

Disassembly

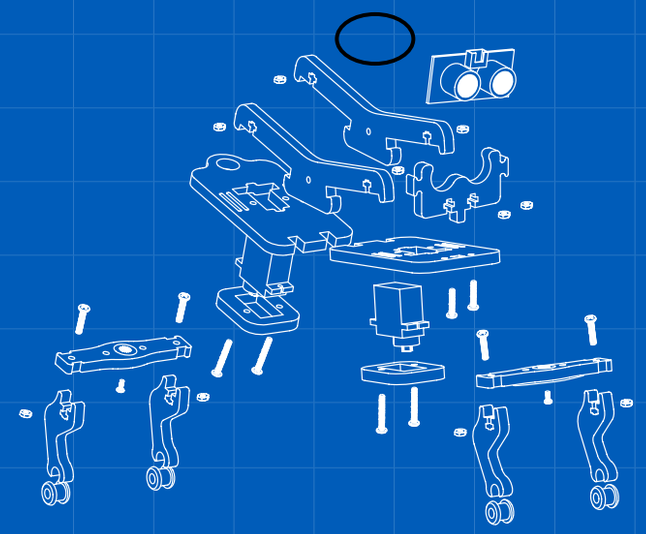

INVENTORY

1	Torso	2	FS90 Servo Motor
1	Trunk	6	3/8" #4-40 Screws (A)
4	Legs	2	Small Screws (B)
4	Grommet	4	3/4" #4-40 Screws (C)
2	Servo Horn	4	1/4" #4-40 Screws (D)
2	Servo Holder	10	#4-40 Hex Nuts
2	Spine	1	Ultrasonic Range Finder
2	Spline Horn	1	Ultrasonic Range Finder Holder
1	O-Ring		

1

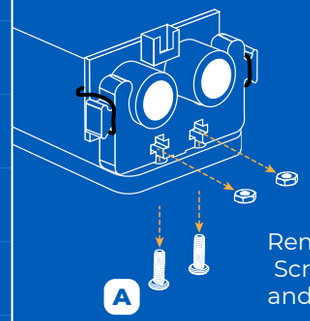

Remove Screws and Nut

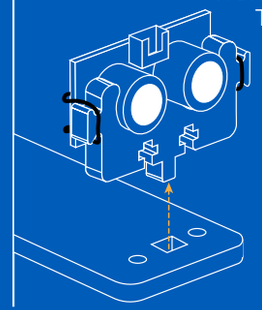

Detach Holder from Walker Torso

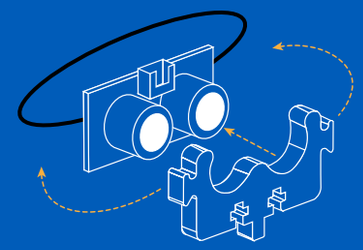

Remove O-Ring to detach Range Finder from Holder

Place each item on its spot on the Components sheet

2

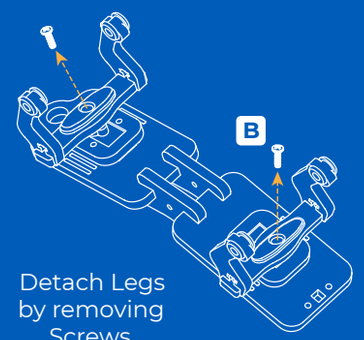

Detach Legs by removing Screws

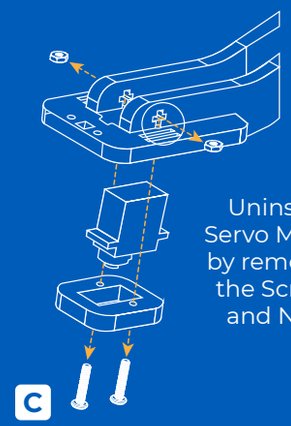

Uninstall Servo Motors by removing the Screws and Nuts

3

Detach the Spines from both the Torso and Trunk

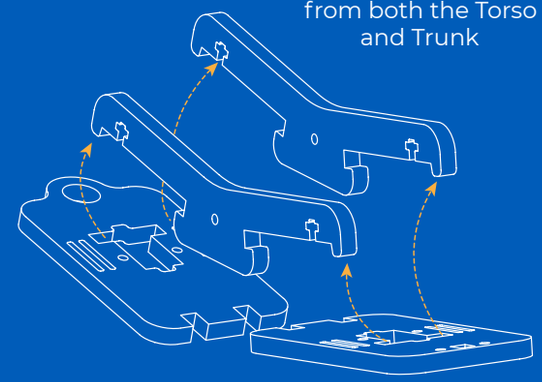

4

Deattach Legs from Servo Horn by removning Screws and Nuts

Repeat 2× with all four legs

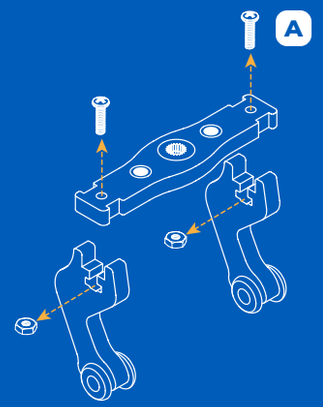

5

Remove Grommet from each Leg

Repeat 4×

DISASSEMBLY COMPLETE!

If not already done, place each piece on its spot on the Components sheet

Piper Make Robotic Walker - Version 1.2.0