BeePro Components list	
Esp32 S3	ESP32-WROOM-32(U)E-N16
IP5306	power management
BMI270/mpu6050	6-axis imu
MCP7940	rtc
TPS73633DBVR	3.3v 2A LDO
MAX98357A	audio amplifier
HMC5883L	3-axis magantometer
ADS1110	ADC
aht20	weather sensor
VCNL4040M3OE	light sensor
MT3608	dc-dc boost

WS2812B-2020	RGB led
4013 microphone	smd microphone

https://www.espressif.com/sites/default/files/documentation/esp32-s3_datasheet_en.pdf

https://www.ti.com/lit/ds/symlink/tps73633-ep.pdf?ts=1716467232035&ref_url=https%253A%252F%252Fwww.google.com%252F

BeePro i/o
tactile switch(on/off/reset)
usb c
2x20 2.54mm female header
i2c PORT A
4 pin PORT B
4 pin PORT C
2.0/2.4'' touch screen with TFT card
OV7670 0.3MP camera
speaker

Storage
micro sd slot

Power
1S 700mah

Sheet: /
File: beePro.kicad_sch

Title:

Size: A4	Date:	**Rev:**
KiCad E.D.A. 8.99.0-unknown		Id: 1/6

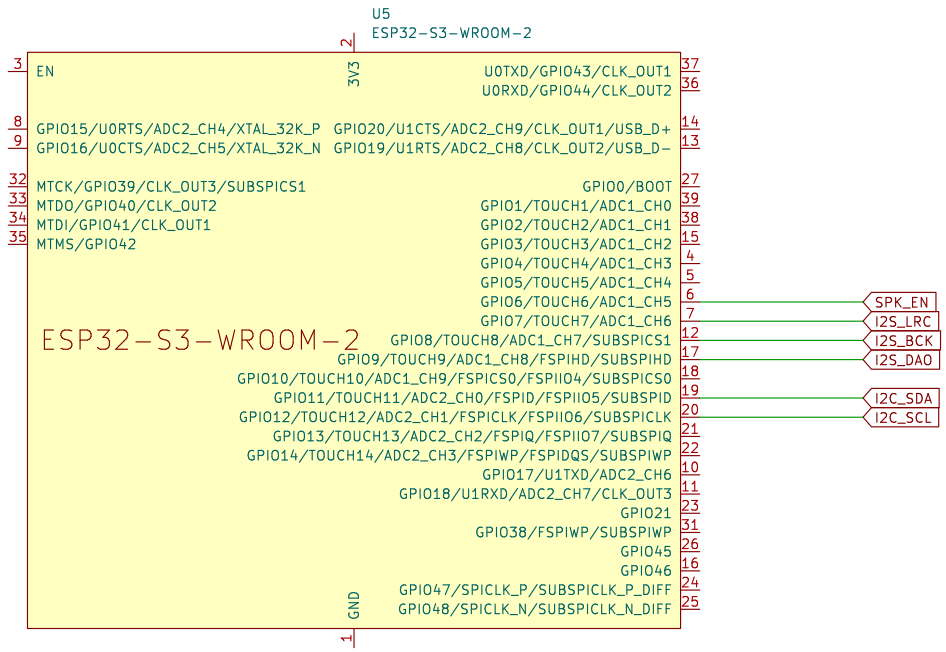

Sheet: /esp32/
File: Details.kicad_sch

Title:

Size: A4	Date:	**Rev:**
KiCad E.D.A. 8.99.0-unknown		Id: 2/6

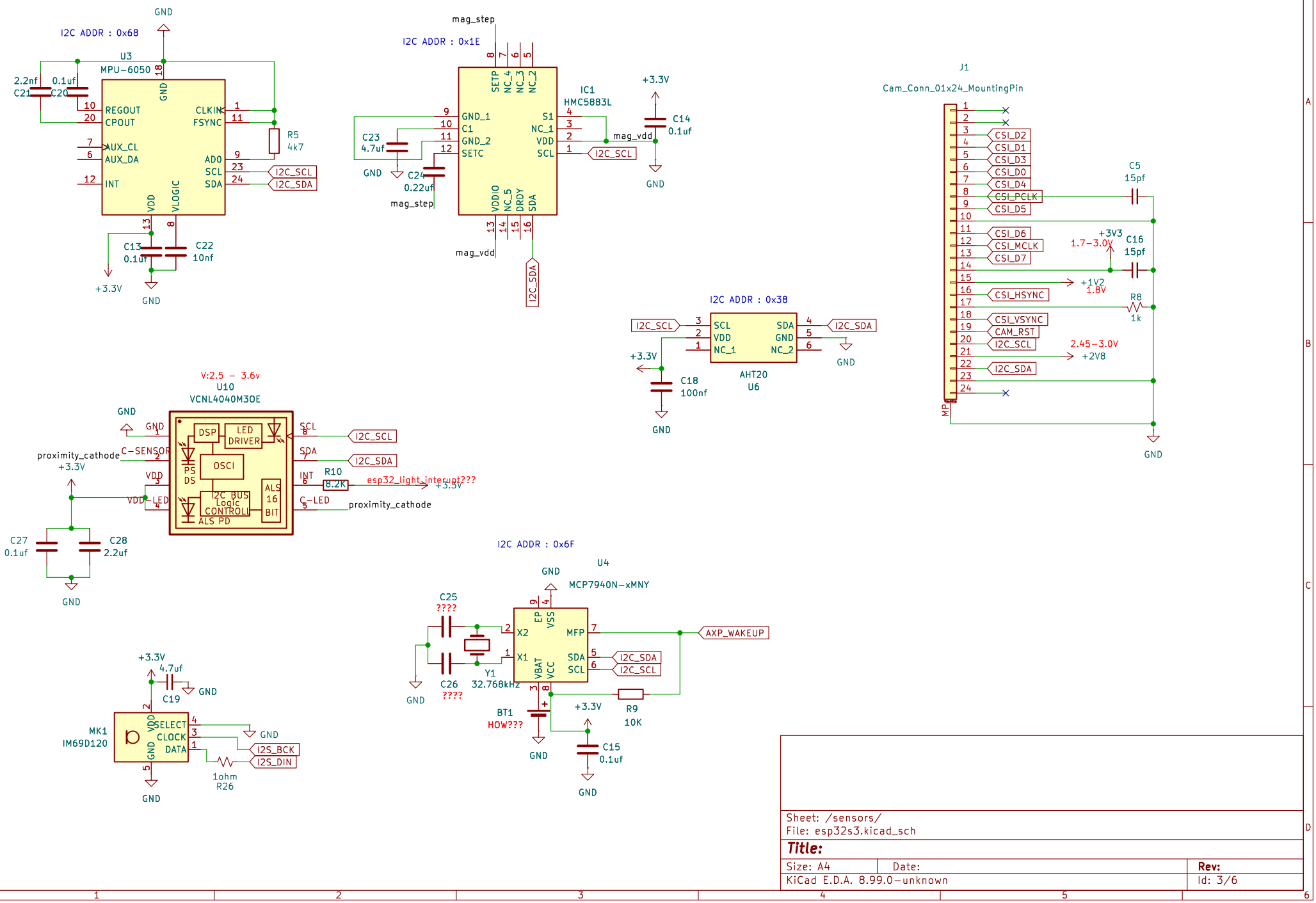
I2C ADDR : 0x68
U3
MPU-6050
2.2nf
C21
0.1uf
C20
REGOUT
CPOUT
AUX_CL
AUX_DA
INT
GND
CLKIN
FSYNC
ADO
SCL
SDA
VDD
VLOGIC
R5
4k7
I2C_SCL
I2C_SDA
C13
0.1uf
C22
10nf
+3.3V
GND
mag_step
I2C ADDR : 0x1E
IC1
HMC5883L
SETP
NC_4
NC_3
NC_2
GND_1
C1
GND_2
SETC
S1
NC_1
VDD
SCL
VDDIO
NC_5
DRDY
SDA
C23
4.7uf
C24
0.22uf
C14
0.1uf
mag_vdd
I2C_SCL
I2C_SDA
J1
Cam_Conn_01x24_MountingPin
CSI_D2
CSI_D1
CSI_D3
CSI_D0
CSI_D4
CSI_PCLK
CSI_D5
CSI_D6
CSI_MCLK
CSI_D7
CSI_HSYNC
CSI_VSYNC
CAM_RST
I2C_SCL
I2C_SDA
C5
15pf
C16
15pf
+3V3
1.7-3.0V
+1V2
1.8V
2.45-3.0V
+2V8
R8
1k
MP
I2C ADDR : 0x38
SCL
VDD
NC_1
SDA
GND
NC_2
AHT20
U6
C18
100nf
V:2.5 - 3.6v
U10
VCNL4040M3OE
DSP
LED DRIVER
OSCI
PS DS
I2C BUS Logic CONTROL
ALS PD
ALS 16 BIT
C-SENSOR
proximity_cathode
VDD_LED
INT
R10
8.2K
esp32_light_interupt???
C-LED
C27
0.1uf
C28
2.2uf
I2C ADDR : 0x6F
U4
MCP7940N-xMNY
EP
VSS
X2
X1
VBAT
VCC
MFP
SDA
SCL
C25
????
C26
????
Y1
32.768kHz
AXP_WAKEUP
R9
10K
BT1
HOW???
C15
0.1uf
MK1
IM69D120
SELECT
CLOCK
DATA
C19
4.7uf
I2S_BCK
I2S_DIN
1ohm
R26
Sheet: /sensors/
File: esp32s3.kicad_sch
Title:
Size: A4
Date:
Rev:
KiCad E.D.A. 8.99.0-unknown
Id: 3/6

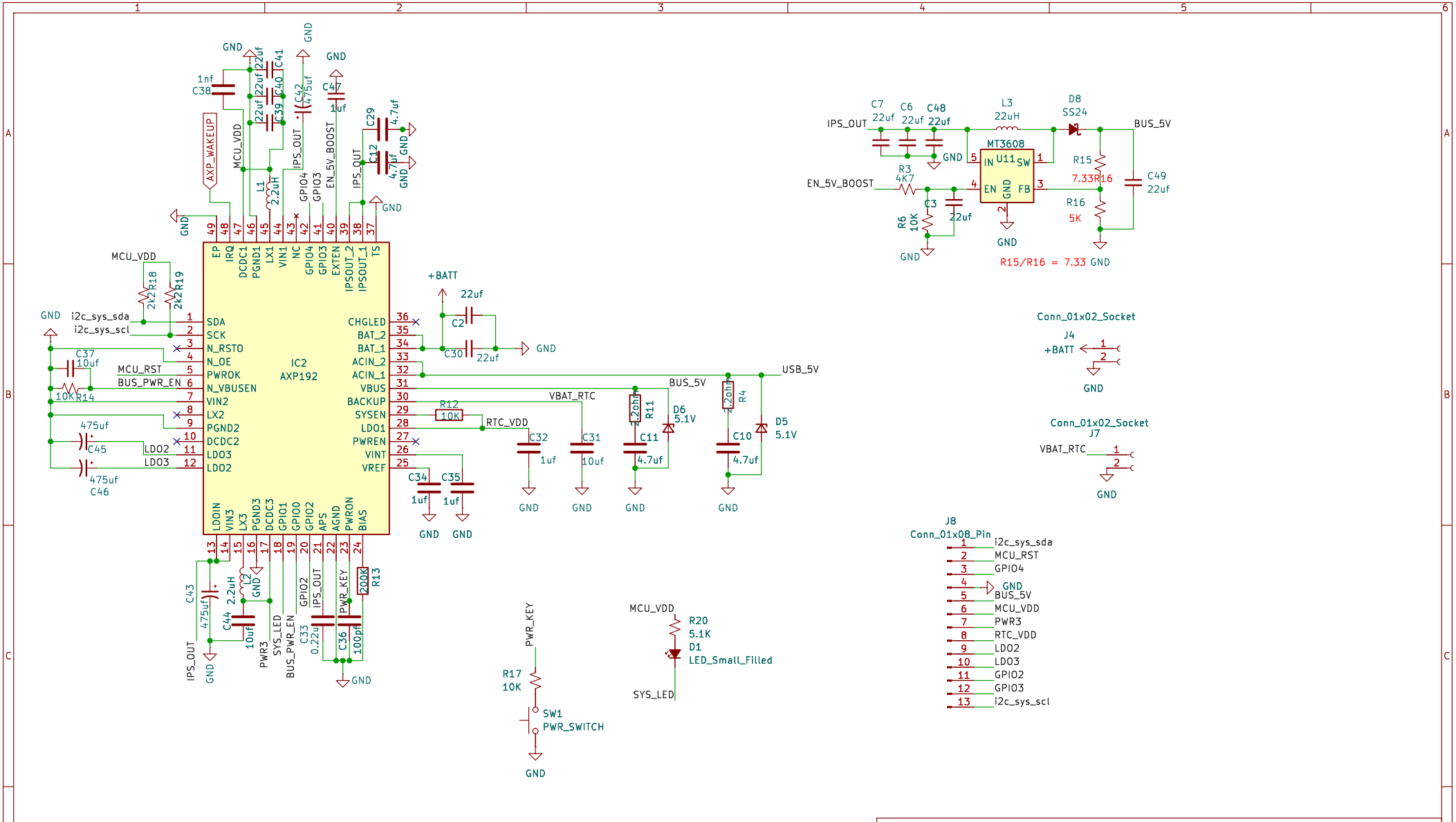

Sheet: /pwr_mgmt/
File: pwr_mgmt.kicad_sch

Title: BEEPRO

Size: A4	Date:	Rev:
KiCad E.D.A. 8.99.0-unknown		Id: 4/6

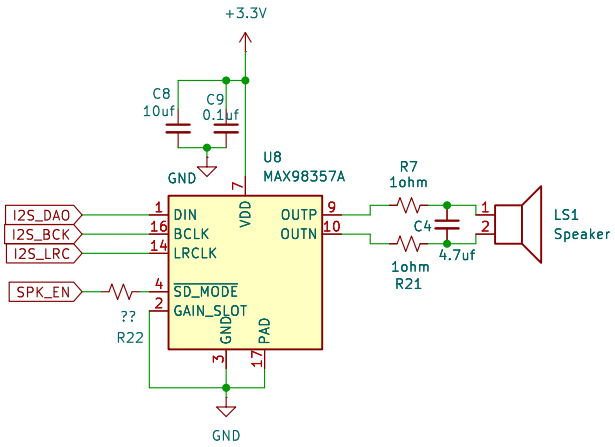

Sheet: /peripherals/		
File: spi_lcd_sdcard.kicad_sch		
Title:		
Size: A4	Date:	**Rev:**
KiCad E.D.A. 8.99.0-unknown		Id: 5/6

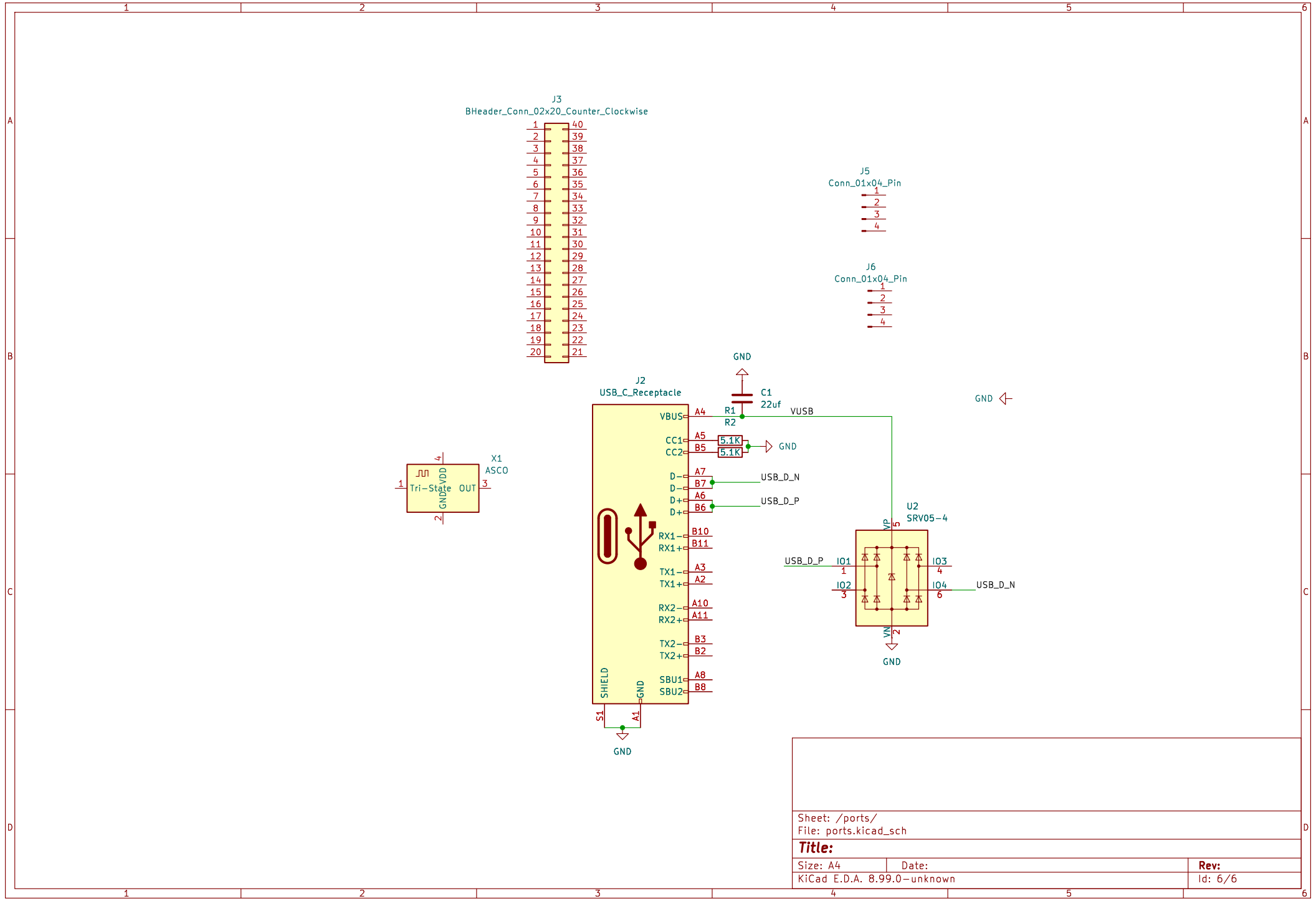

Sheet: /ports/		
File: ports.kicad_sch		
Title:		
Size: A4	Date:	**Rev:**
KiCad E.D.A. 8.99.0−unknown		Id: 6/6