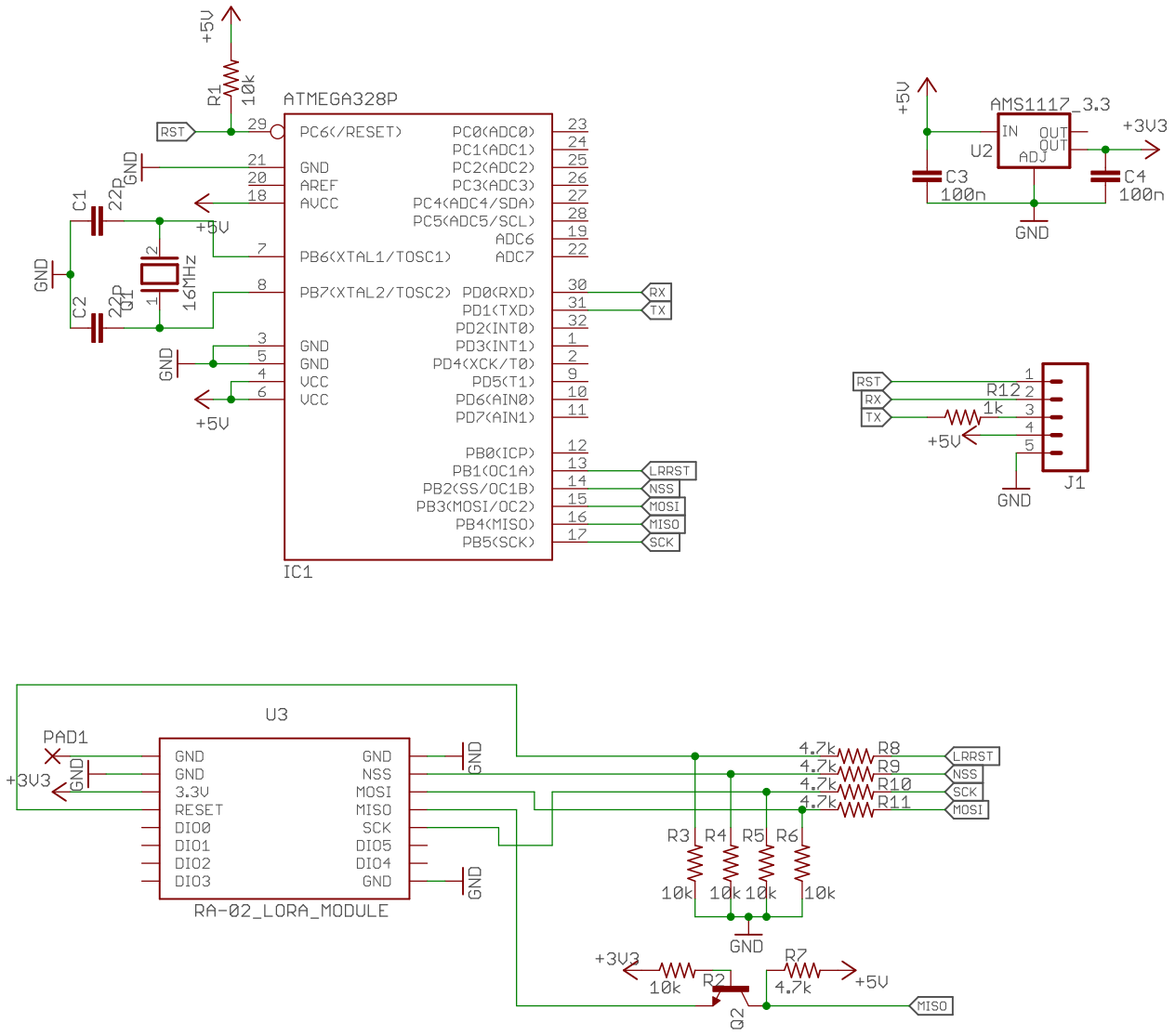
ATMEGA328P
IC1
PC6(/RESET)
GND
AREF
AVCC
PB6(XTAL1/TOSC1)
PB7(XTAL2/TOSC2)
GND
GND
VCC
VCC
PC0(ADC0)
PC1(ADC1)
PC2(ADC2)
PC3(ADC3)
PC4(ADC4/SDA)
PC5(ADC5/SCL)
ADC6
ADC7
PD0(RXD)
PD1(TXD)
PD2(INT0)
PD3(INT1)
PD4(XCK/T0)
PD5(T1)
PD6(AIN0)
PD7(AIN1)
PB0(ICP)
PB1(OC1A)
PB2(SS/OC1B)
PB3(MOSI/OC2)
PB4(MISO)
PB5(SCK)
RST
RX
TX
LRRST
NSS
MOSI
MISO
SCK
+5V
R1
10k
C1
22P
C2
22P
Q1
16MHz
AMS1117_3.3
U2
IN
OUT
OUT
ADJ
+3V3
C3
100n
C4
100n
R12
1k
J1
U3
PAD1
+3V3
RA-02_LORA_MODULE
GND
NSS
MOSI
MISO
SCK
DIO0
DIO1
DIO2
DIO3
DIO5
DIO4
3.3V
RESET
R8
R9
R10
R11
4.7k
R3
R4
R5
R6
10k
R2
R7
Q2