PCB Layout Information

项目名称:	吉利ZCU_R技术研发项目		
项目编号:	AP230152	项目经理:	王雅琨 张红玲
LAYOUT工程师:	董慧/王琅/周沁	应用工程师:	余康/冯文基/李森

输入信息:
Input Information:

输入时间: Input Time:	2024-08-01	PCB ERP Number:	825503205
原理图名称: Shematics Name :	825503205_ZCU_SCH.DSN	版本: Version:	V1.3A
DXF文件名称: DXF File Name:	825503205_ZCU_PCB限位图.dxf	DXF状态: DXF State:	已确认
PCB层数: PCB Layer Number:	6 Layers	PCB基材: PCB Base Material:	FR4
表面处理: Surface Handing:	HASL	板厚: Thickness:	1.6mm+/-0.14
外层铜厚: Finished Copper Thickness:	50um	1和2层间距: Layer1 to Layer2 :	0.16mm
2和3层间距: Layer2 to Layer3 :	0.5mm	3和4层间距: Layer3 to Layer4 :	0.24mm
其他要求: Other :	-		

输出信息:
Output Information:

LAYOUT文件名称: LAYOUT File Name:	825503205_ZCU_Layout.brd	版本: Version:	V1.2
DXF文件名称: DXF File Name:	825503205_ZCU_PCB2D.dxf		
emp/emn文件名称: emp/emn File Name:	825503205_ZCU_PCB3D.emn/emp	*注意：导出三维信息时， 输入和输出文件都应为英文字符，否则不能正确生成。*	
Gerber文件名称: Gerber File Name:	TOP.art GND.art PWR.art BOT.art Soldermask_Top.art Soldermask_Bot.art Silkscreen_Top.art Silkscreen_Bot.art Assembly_Top.art Assembly_Bot.art Drill_Dimention.art Drill_Dimention.pdf		
Drill文件名称: Drill File Name:	Ger_Con_Drill.drl		
Route文件名称: Route File Name:	Ger_Con_Route.rou	*注意：如果PCB上有异形孔，请生成ROUTE文件。*	
其他输出: Other :	-		

需要注意的问题:
Need to Attention ! :

敏感信号线: Sensitive Signal Line:	XXXXXXXXXXXXXXXXXXXXXXXXXX。
易干扰信号线: Interference Signal Line:	XXXXXXXXXXXXXXXXXXXXXXXXXX。
射频信号线: RF Signal Line:	XXXXXXXXXXXXXXXXXXXXXXXXXX。
等长信号线: Same Delay Signal Line :	XXXXXXXXXXXXXXXXXXXXXXXXXX。
差分对: Differetial Signal Line:	XXXXXXXXXXXXXXXXXXXXXXXXXX。
大电流: High Current:	XXXXXXXXXXXXXXXXXXXXXXXXXX。
其他: Other :	
其他: Other :	

845504438

其他详见原理图内部信息。
如有未尽事宜，请和应用工程师沟通。

经纬恒润 JINGWEI HIRAIN

Design NO.	Rev	Sheet Name
825503205_ZCUP_SCH	V1.3	INFORMATION

Size	Designer / Date	Check / Date	Confirm / Date
	Sen.Li/2024.08.01	Jianwei.Yao/2024.08.01	Qinghua.Diao/2024.08.01

Date: Tuesday, August 13, 2024 Sheet 1 of 32

Debug Information

位号	网络名称	描述
DP4000	UBD3	Power_Exterior Light3
DP4001	GND	GND
DP4002	GND	GND
DP4003	GND	GND
DP4004	UBD1	Power_Window
DP4005	UBD4	Power_Seat
DP4006	UBD5	Power_Cinch
DP4007	UBD2	Power_Exterior Light2
DP4008	UB-PR	12V Logic Power
DP4009	VCC5V0	5V Logic Power
DP4010	VCC1V5	1.5V Logic Power
DP4011	点火信号	接12V唤醒
DP7010	JTAG_TMS/SWDIO	Mode setting
DP7011	JTAG_TCLK/SWDCLK	Clock
DP7012	JTAG_TDO	Test data output
DP7013	JTAG_TDI	Test data input
DP7014	MCU_RESET	Reset

845504438

经纬恒润 JINGWEI HIRAIN

Design NO.	Rev	Sheet Name
825503205_ZCUP_SCH	V1.3	DEBUG

Size	Designer / Date	Check / Date	Confirm / Date
	Sen.Li/2024.08.01	Jianwei.Yao/2024.08.01	Qinghua.Diao/2024.08.01

Date: Tuesday, August 13, 2024 Sheet 2 of 32

电源&地

功率防反

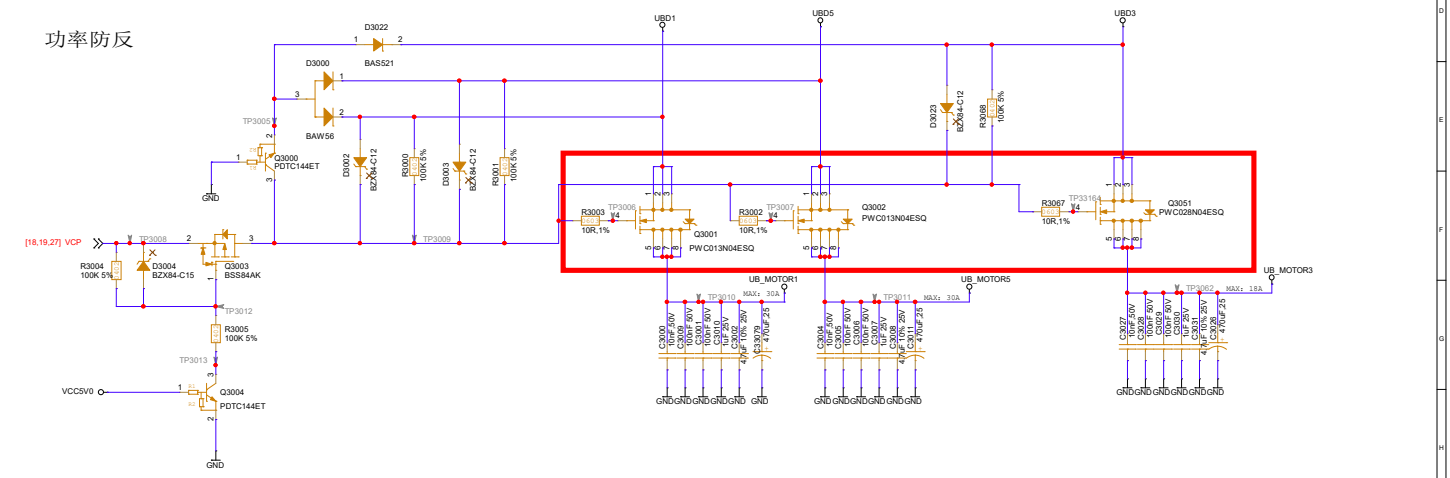

TRK_5V

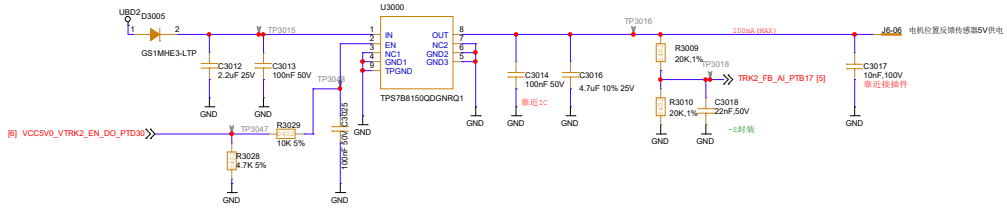

电源监控

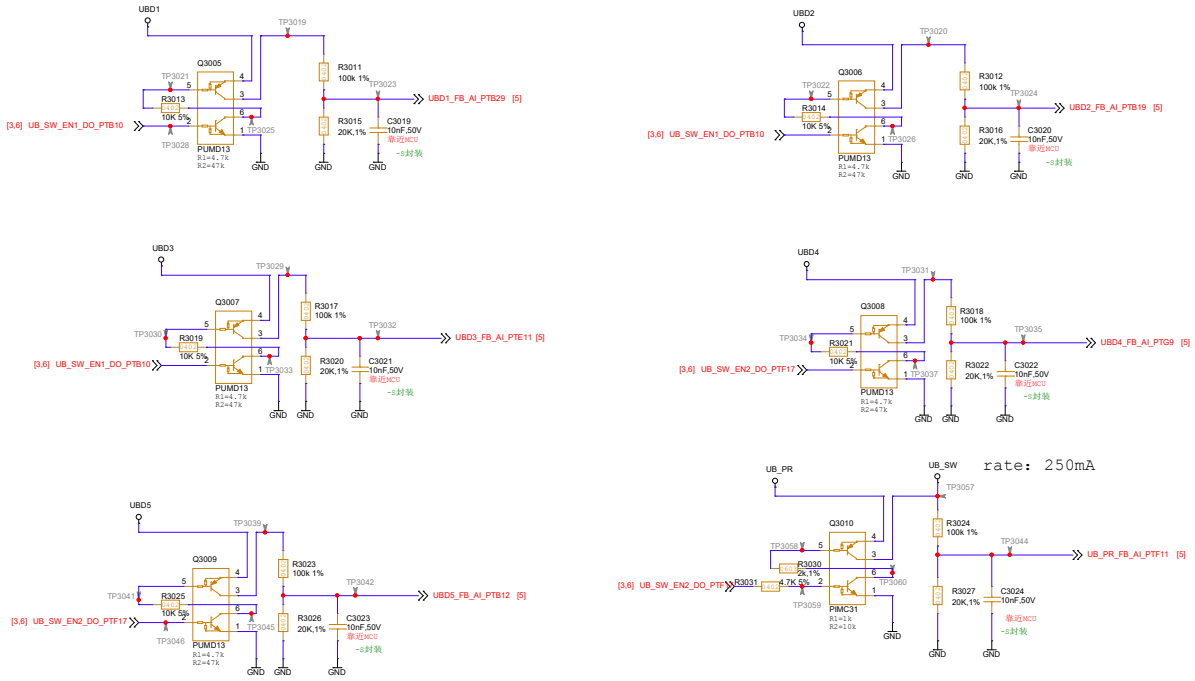

845504438

经纬恒润 JINGWEI HIRAIN

Design NO.	Rev	Sheet Name
825503205_ZCUP_SCH	V1.3	POWER1

Size	Designer / Date	Check / Date	Confirm / Date
	Sen.Li/2024.08.01	Jianwei.Yao/2024.08.01	Qinghua.Diao/2024.08.01

Date: Tuesday, August 13, 2024 Sheet 3 of 32

PMIC

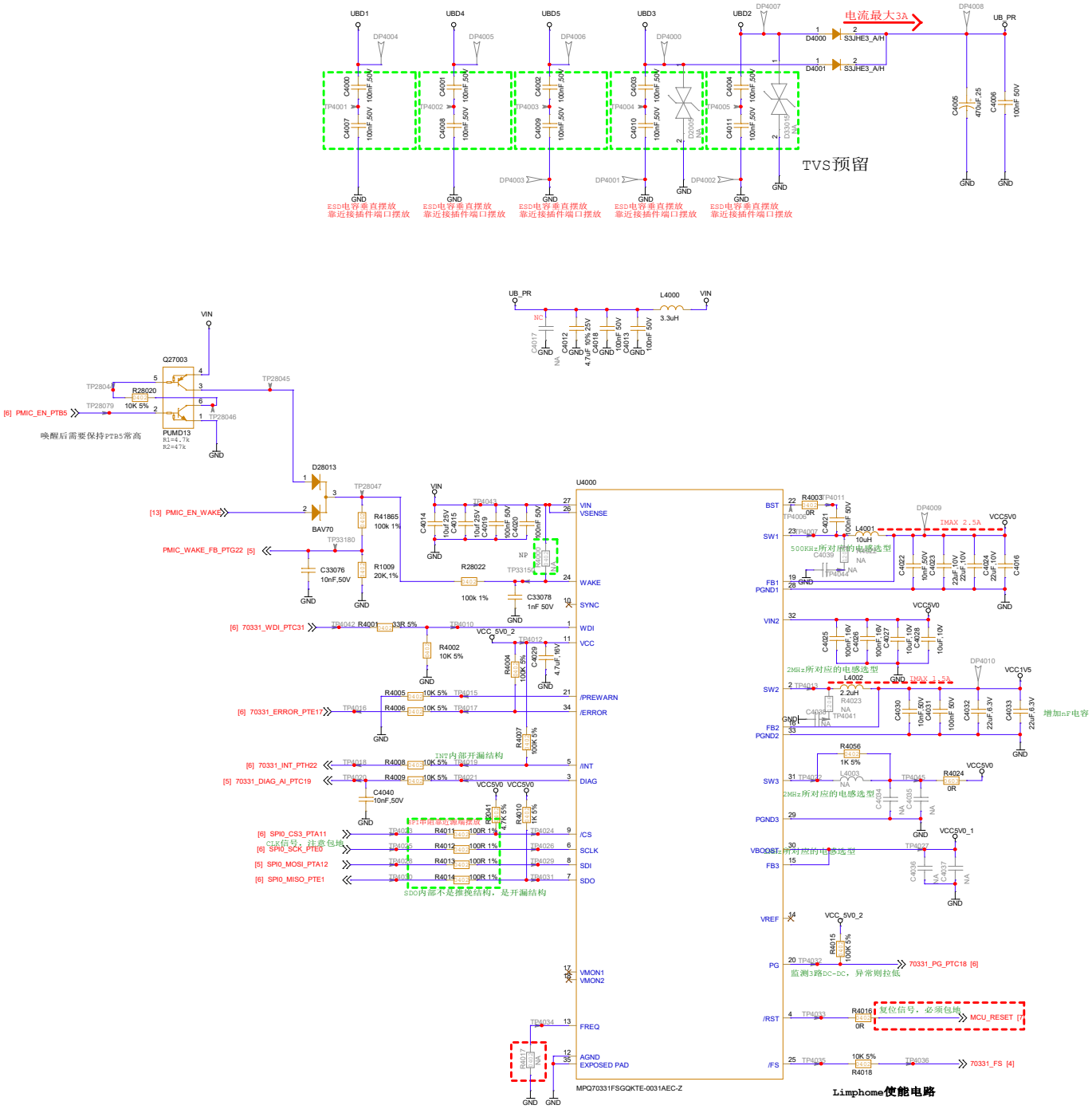

845504438

Design NO.	Rev	Sheet Name
825503205_ZCUP_SCH	V1.3	POWER2

Size	Designer / Date	Check / Date	Confirm / Date
Custom	Sen.Li/2024.08.01	Jianwei.Yao/2024.08.01	Qinghua.Diao/2024.08.01
Date: Tuesday, August 13, 2024		Sheet 4 of 32	

经纬恒润 JINGWEI HIRAIN

U5000A

[22] 2HB35#2_SNS_AI_PTG1	G6	ADC0_SE0/PTG1/FLEXCAN5_TX
[28] LIN8_RX_PTA22	H6	ADC0_SE1/PTA22/FTU2_CH3/FTU2_QD_PHA/FCUART7_RX
[9] LIN7_RX_PTA21	G2	ADC0_SE2/PTA21/FCUART6_RX/FCUART3_CTS/FTU2_CH5
[14] UB_POLLING_FB_AI_PTI2	H3	ADC0_SE3/PTI2/FCUART8_TX
[23] 2HB16#1_SNS_AI_PTG2	G3	ADC0_SE4/PTG2/FLEXCAN5_RX
[28] CAN5_RX_PTE15	H5	ADC0_SE5/PTE15/FCUART1_CTS/FLEXCAN5_RX/FTU2_CH6/TRGSEL_OUT6
[9] LIN7_TX_PTD1	G1	ADC0_SE6/PTD1/FCUART6_TX/FTU2_CH4/TRGSEL_OUT2
[24] FBLW_AI_PTF3	H2	ADC0_SE7/PTF3/FCUART8_RTS
[3] UBD3_FB_AI_PTE11	L3	ADC0_SE8/PTE11/FTU2_CH1/FCSPI2_PCS0/TRGSEL_OUT5
[11] RPDWLS_AI_PTE10	L2	ADC0_SE9/PTE10/SCG_CLKOUT/FTU8_CH0/FCSPI2_SIN/TRGSEL_OUT4
[8] 1043_CAN_EN_DO_PTE13	M1	ADC0_SE10/PTE13/FTU2_CH0/FCSPI2_SCK
[11] SW_Length_lumbar_AI_PTA25	M2	ADC0_SE11/PTA25/FTU4_CH3/FCSPI2_SOUT
[21] 2HB35#3_SNS_AI_PTE5	M6	ADC0_SE12/PTE5/FTU_TCK2/FTU4_CH3/FCSPI2_PCS1
[25] BV1LB040_AI_PTD0	M3	ADC0_SE13/PTD0/FTU4_CH2/TRGSEL_OUT1
[9] LIN4_RX_PTA23	H5	ADC0_SE14/CMP0_IN6/PTA23/FTU4_CH1/FCUART3_RX/ETM_TRACE_D0/FTU4_QD_PHA
[9] LIN4_TX_PTA24	N6	ADC0_SE15/CMP0_IN7/PTA24/FTU4_CH0/FCUART3_TX/ETM_TRACE_D1/FTU4_QD_PHB
[18] 8718#2_SPI1_CS0_PTA27	N1	ADC0_SE16/PTA27/FTU5_CH7/FCUART0_TX/ETM_TRACE_D2/FCSPI1_PCS0
[18,19,20] SPI1_MOSI_PTE12	N5	ADC0_SE17/PTE12/FTU5_CH6/FTU_FLT2/ETM_TRACE_D3/FCSPI1_SOUT/TRGSEL_IN8
[18,19,20] SPI1_SCK_PTA28	N2	ADC0_SE18/PTA28/FTU5_CH5/FCUART0_RX/FCSPI1_SCK/TRGSEL_IN2
[18,19,20] SPI1_MISO_PTA29	P1	ADC0_SE19/PTA29/FTU5_CH4/FCSPI1_SIN
[21] 2HB35#4_PWM_EN2_PTG3	N3	ADC0_SE20/PTG3/FCUART9_RX/FTU9_CH3/ETM_TRACE_D8
[19] 8718#3_SO1_AD_PTG4	P2	ADC0_SE21/PTG4/FCUART9_TX/FTU9_CH2/ETM_TRACE_D9
[19] 8718#3_SO2_AD_PTG5	R1	ADC0_SE22/PTG5/FCUART9_RTS/FTU9_CH1/ETM_TRACE_D10
[10] EDM1_AI_PTH3	P3	ADC0_SE23/PTH3/FCUART9_CTS/FTU9_CH0/ETM_TRACE_D11
[20] 8908#1_SPI1_PCS1_PTD17	R2	ADC0_SE24/PTD17/FTU5_CH3/FCUART2_TX/ETM_TRACE_D4/FCSPI1_PCS1/FTU5_QD_PHA
[19] 8718#3_SPI1_CS2_PTA30	T1	ADC0_SE25/PTA30/FTU5_CH2/FCUART2_RX/ETM_TRACE_D5/FCSPI1_PCS2/FTU5_QD_PHB
[8] CAN2_TX_PTD16	T3	ADC0_SE26/PTD16/FTU5_CH1/FLEXCAN2_TX/ETM_TRACE_D6/FCSPI1_PCS3
[8] CAN2_RX_PTD15	T2	ADC0_SE27/PTD15/FTU5_CH0/FLEXCAN2_RX/ETM_TRACE_D7/ENET_PPS2/FCUART2_RTS
[11] SW_Backrest_AI_PTE9	U1	ADC0_SE28/PTE9/FTU0_CH7/ETM_TRACE_CLKOUT/ENET_PPS3/FCUART2_CTS
[11] FBLW_FB+_AI_PTA31	U2	ADC0_SE29/PTA31/FTU0_CH6/FCUART5_TX/FTU_FLT3/FLEXCAN3_TX
[11] FBLW_FB-_AI_PTB18	R7	ADC0_SE30/PTB18/FTU0_CH5/FCUART5_RX/FLEXCAN3_RX
[3] UBD2_FB_AI_PTB19	V2	ADC0_SE31/PTB19/FTU0_CH4
	W1	

R5000 100R 1% PS000
R5001 100R 1% PS001
4.99K
4.99K

[25] BD4LD650_PWM3_PTI0	E2	ADC1_SE0/PTI0/FCUART7_TX/FTU9_CH4
[27] DZ300_CM_FB_AI_PTH1	D1	ADC1_SE1/PTH1/FCUART7_CTS/FTU9_CH6
[28] CAN5_TX_PTE16	C1	ADC1_SE2/PTE16/FCUART1_RTS/FLEXCAN5_TX/FTU2_CH7/TRGSEL_OUT7
[9] LIN2_RX_PTA19	D3	ADC1_SE3/PTA19/FCUART1_RX/FTU8_CH7
[18]8718#2_SO1_AD_PTH2	F3	ADC1_SE4/PTH2/FCUART7_RX/FTU9_CH5
[12] Temp_FL_FB_AI_PTH0	G5	ADC1_SE5/PTH0/FCUART7_RTS/FTU9_CH7
[11] SW_Length_AI_PTA20	E3	ADC1_SE6/PTA20/FTU3_CH7/FCUART3_RTS
[9] LIN2_TX_PTA18	D2	ADC1_SE7/PTA18/FTU3_CH6/FCUART1_TX
[18] 8718_PD1_AI_PTG23	F5	ADC1_SE8/CMP1_IN0/PTG23/SENT0_RXD3/FTU1_QD_PHB/FCSPI0_SCK----(PD0/HSpad)
[19] PMIC_WAKE_FB_PTG22	C2	ADC1_SE9/CMP1_IN1/PTG22/SENT0_RXD2/FTU1_QD_PHA/FCSPI0_SIN----(PD0/HSpad)
[27] DZ300_PDWM_Current2_PTG21	B1	ADC1_SE10/CMP1_IN2/PTG21/SENT0_RXD1/FCUART0_RX/FCSPI0_PCS0----(PD0/HSpad)
[18] 8718#2_CS2_AI_PTF23	A2	ADC1_SE11/CMP1_IN3/PTF23/SENT0_RXD0/FCUART0_TX/FCSPI0_SOUT/CMP2_OUT----(PD0/HSpad)
[27]UB_DZ300_EN_PTF1	C4	ADC1_SE12/PTF1/FCUART6_TX/FTU2_QD_PHB----(PD0)
[28]DZ300_WAKE2_PTF0	B3	ADC1_SE13/PTF0/FCUART6_RX/FTU2_QD_PHA----(PD0)
[12] VCC5V0_SW_AI_PTA8	A3	ADC1_SE14/PTA8/FCUART2_RX----(PD0)
[27] DZ300_PDWM_Current1_PTA9	C5	ADC1_SE15/PTA9/FCUART2_TX/RTC_CLKOUT----(PD0)
[19] 8718#3_IN1_PWM_PTE27	F7	ADC1_SE16/PTE27/FTU3_CH5/SENT0_RXD1----(PD0)
[12] Rec_FB_AI_PTE26	A4	ADC1_SE17/PTE26/FTU3_CH2/AONTIMER0_CLK2/SENT0_RXD0/TRGSEL_IN14----(PD0)
[4] SPI0_MOSI_PTA12	A5	ADC1_SE18/PTA12/FTU0_CH7/FLEXCAN1_RX/CMP2_OUT/FCSPI0_SOUT/FTU2_QD_PHB----(PD0)
[19] 8718#3_SH5_AI_PTE25	E9	ADC1_SE19/PTE25/FTU0_CH6/AONTIMER0_CLK0/FCSPI0_PCS0/TRGSEL_OUT7----(PD0)
[26] Seat_Motor_Group2_Current_PTE22	F10	ADC1_SE20/PTE22/FTU0_CH2/FLEXCAN0_RX/FCUART0_CTS/----(PD0/
[26] Seat_Motor_Group1_Current_PTE21	B8	ADC1_SE21/PTE21/FTU0_CH1/FLEXCAN0_TX/FCUART0_RTS/----(PD0/
[21] 2HB35#3_SEL2_DO_PTE20	A8	ADC1_SE22/PTE20/FTU0_CH0/FCIIC0_SDA/SENT0_RXD3/----(PD0/
[19] 8718#3_SH2_AI_PTE19	C9	ADC1_SE23/PTE19/SCG_CLKOUT/FCIIC0_SCL/SENT0_RXD2/CMP0_OUT/TRGSEL_IN12----(PD0)
[8] CAN1_RX_PTE2	B9	ADC1_SE24/PTE2/FTU6_CH6/FLEXCAN1_RX/FCUART1_CTS
[8] CAN1_TX_PTE6	F11	ADC1_SE25/PTE6/FTU6_CH5/FLEXCAN1_TX/FCUART1_RTS
[11] PSIOD_AI_PTH20	B10	ADC1_SE26/PTH20/SENT1_RXD1/FTU1_CH5/TRGSEL_OUT1
[18] 8718#2_CS1_AI_PTH19	A10	ADC1_SE27/PTH19/SENT1_RXD0/FTU1_CH4/TRGSEL_OUT0
[18] 8718#2_SO2_AI_PTA15	C11	ADC1_SE28/PTA15/FTU6_CH4/FTU5_QD_PHB/TRGSEL_OUT0/FLEXCAN3_RX
[21] 2HB35#3_PWM_EN2_PTE18	B11	ADC1_SE29/PTE18/FTU6_CH3/FTU5_QD_PHA/FLEXCAN3_TX
[8] CAN_STB_PTC7	A14	ADC1_SE30/PTC7/FCUART1_TX/FTU3_CH3
[20] 8908_EN_DO_PTD31	E13	ADC1_SE31/PTD31/FTU6_CH0/MSC1_SDI3/FTU1_QD_PHA

	W18	
[12] Temp_panel_SL_KE_AI_PTC23	W20	ADC2_SE0/PTC23/FTU6_CH6/FCUART2_RTS/MSC0_SDI0
[22] 1HB09#1_SNS_AI_PTH9	U18	ADC2_SE1/PTH9/MSC0_FCLP/FTU1_QD_PHB
[12] FuelEjectLevelSensor_AI_PTC24	U19	ADC2_SE2/PTC24/FTU3_CH2/FCUART2_CTS
[12] Temp_feet_FR_KX_AI_PTC10	Y19	ADC2_SE3/PTC10/FTU3_CH4/FLEXCAN4_RX/MSC0_EN1/TRGSEL_IN11----(HSpad)
[11] PDWLS_AI_PTF7	V19	ADC2_SE4/PTF7/FTU8_CH5/FTU1_QD_PHA
[24] DLE_AI_PTH10	V20	ADC2_SE5/PTH10/MSC0_SOP
[12] Temp_panel_FR_KX&EX_AI_PTC1	T18	ADC2_SE6/PTC11/FTU3_CH3/FLEXCAN4_TX/MSC0_EN0/TRGSEL_IN10----(HSpad)
[12] Temp_panel_SR_EX_AI_PTC27	M15	ADC2_SE7/PTC27/FCSPI2_PCS1/FCUART5_RX
[12] TRK1_FB_AI_PTC9	M18	ADC2_SE8/PTC9/FTU7_CH3/FTU_FLT10/FTU4_QD_PHA/FCSPI4_SCK/FCUART0_RTS
[12] Temp_S_FB_AI_PTC8	M16	ADC2_SE9/PTC8/FTU7_CH4/FTU_FLT11/FTU4_QD_PHB/FCSPI4_PCS0/FCUART0_CTS
[8] CAN3_RX_PTC29	M20	ADC2_SE10/PTC29/FTU7_CH5/FLEXCAN3_RX/SDDF0_CLK1
[12] Mode_F_FR_FB_AI_PTA7	L20	ADC2_SE11/PTA7/FTU7_CH6/FTU_FLT12/FCUART1_RTS/FCSPI4_SIN
[23] 2HB16#3_SNS_AI_PTC30	L18	ADC2_SE12/PTC30/FTU7_CH7/FTU5_QD_PHA/FCSPI4_SOUT
[10] EDM2_AI_PTA6	L19	ADC2_SE13/PTA6/FTU5_CH0/FTU_FLT13/FCUART1_CTS/TRGSEL_OUT4/SDDF0_CH0
[4] 70331_WDI_PTC31	L15	ADC2_SE14/PTC31/FTU5_CH1/FTU5_QD_PHB/TRGSEL_OUT3/SDDF0_CH1
[12] Temp_Feet_SL_KX&EX_AI_PTE7	L16	ADC2_SE15/PTE7/FTU5_CH2/FTU_FLT14/SDDF0_CH2
[12] Mode_S_FB_AI_PTD18	K20	ADC2_SE16/PTD18/FTU5_CH3/FCIIC1_SDA/SDDF0_CH3
[12] Defrost_Mode_FL_FB_AI_PTD19	K19	ADC2_SE17/PTD19/FTU5_CH4/FCIIC1_SCL/SDDF0_CLK2
[12] GLRX_AI_PTF15	K18	ADC2_SE18/PTF15/SDDF0_CLK3
[12] GUDY_AI_PTA17	K16	ADC2_SE19/PTA17/FTU5_CH5/FTU_FLT15/FCSPI1_PCS2/FLEXCAN4_TX
[3] TRK2_FB_AI_PTB17	J20	ADC2_SE20/PTB17/FTU5_CH6/FCSPI1_PCS3/FLEXCAN4_RX/SDDF0_CLK3
[12] FuelPumpLevelSensor_AI_PTH12	J19	ADC2_SE21/PTH12/SDDF0_CH2/FCUART1_TX
[25] BD4LD650_PWM4_PTH13	H20	ADC2_SE22/PTH13/SDDF0_CH3/FTU9_CH0/FCUART1_RX
[25] BD4LD650_PWM2_PTH14	J18	ADC2_SE23/PTH14/SDDF0_CLK1/FTU9_CH1/FCUART3_TX
[23] TPS2HB16_OUT2_AI_PTI12	K15	ADC2_SE24/PTI12/SDDF0_CLK2/FTU9_CH2/FCUART3_RX 未使用的PORT软件配置为低
	G20	ADC2_SE25/PTB16/FTU5_CH7/FCUART5_CTS/MSC1_EN2
[12] Temp Sensor 5V_AI_PTB15	J15	ADC2_SE26/PTB15/FTU5_CH0/FCUART4_TX/MSC1_SDI2
[19] 8718#3_IN4_PWM_PTB14	H19	ADC2_SE27/PTB14/FTU3_CH1/FCUART4_RX/MSC1_EN3
[18] 8718#2_IN4_PWM_PTB13	J16	ADC2_SE28/PTB13/FTU3_CH2/MSC1_SDI3
[3] UBD5_FB_AI_PTB12	F19	ADC2_SE29/PTB12/FTU9_CH3/FLEXCAN2_RX
[9] LIN6_RX_PTD20	G16	ADC2_SE30/PTD20/FTU3_CH4/FCUART5_RX/FCSPI1_PCS1
[18] 8718#2_IN3_PWM_PTD23		ADC2_SE31/PTD23/FTU2_CH1/FCSPI1_PCS0

	W15	
[3] UBD1_FB_AI_PTB29	R13	ADC3_SE0/PTB29/FTU1_CH3/MSC0_FCLP/TRGSEL_IN3
[12] Temp_FR_FB_AI_PTC12	W16	ADC3_SE1/PTC12/FTU1_CH5/TRGSEL_OUT5/FLEXCAN5_RX/MSC0_EN2----(HSpad)
[11] SW_FS_AI_PTC20	T17	ADC3_SE2/PTC20/FTU1_CH7/MSC0_SDI2
[3] UB_PR_FB_AI_PTF11	V15	ADC3_SE3/PTF11/FTU0_CH5/MSC0_SDI2
[12] Temp_panel_FL_KE_AI_PTC13	Y16	ADC3_SE4/PTC13/FTU1_CH4/TRGSEL_OUT6/FLEXCAN5_TX/MSC0_SOP
[4] 70331_DIAG_AI_PTC19	R14	ADC3_SE5/PTC19/FTU1_CH6/MSC0_EN3----(HSpad)
[11] SW_Height_AI_PTC21	T14	ADC3_SE6/PTC21/FTU3_CH0/MSC0_SDI3
[3] UBD4_FB_AI_PTG9	W17	ADC3_SE7/PTG9/FTU0_CH6/MSC0_SDI3
[11] SW_BK_Length_AI_PTG10	V16	ADC3_SE8/PTG10/FTU0_CH7/FTU2_QD_PHA
[11] BLW_LPM_FB-_AI_PTG11	Y15	ADC3_SE9/PTG11/FTU2_QD_PHB
[24] FBLW_FB_AO_PTC22	Y18	ADC3_SE10/PTC22/FTU3_CH1/MSC0_SDI1
[21] 2HB35#5_SNS_AI_PTI13	V17	ADC3_SE11/PTI13
[21] 2HB35#4_SNS_AI_PTI14	U20	ADC3_SE12/PTI14
[22] 2HB35#2_DO_EN1_PTF13	P15	ADC3_SE13/CMP2_IN4/PTF13/FCSPI2_PCS2
[12] Temp_Fincar_AI_PTF12	P16	ADC3_SE14/CMP2_IN5/PTF12/SDDF0_CLK0
[12] Temp_Feet_FL_KX_AI_PTF14	T19	ADC3_SE15/CMP2_IN6/PTF14/SDDF0_BREAK0/FCSPI2_PCS3/FCUART5_TX
[11] PSH/LES_AI_PTG12	R18	ADC3_SE16/CMP2_IN7/PTG12/SDDF0_BREAK1/FTU6_CH7
[12] Front_EVAP_Temp_AI_PTB1	T20	ADC3_SE17/PTB1/SDDF0_BREAK2/FTU_TCK0/FLEXCAN0_TX/FTU3_CH5
[12] Hex_sensor_AI_PTB0	R19	ADC3_SE18/PTB0/SDDF0_BREAK3/FLEXCAN0_RX/FTU3_CH6
[12] Temp_Rair_AI_PTB25	N16	ADC3_SE19/PTB25/FCSPI2_PCS0/FTU3_CH6
[12] Temp_Rincar_AI_PTB3	P18	ADC3_SE20/PTB3/FTU1_QD_PHA/FCSPI2_SCK/FTU3_CH7
[12] Seat Heater Cushion NTC_AI_PTB27	R20	ADC3_SE21/PTB27/FTU7_CH0/FTU1_QD_PHB/FCSPI2_SOUT
[23] 2HB16#2_SNS_AI_PTB28	M19	ADC3_SE22/PTB28/FTU7_CH1/FCSPI2_SIN
[8] CAN3_TX_PTC28	V14	ADC3_SE23/PTC28/FTU7_CH2/FLEXCAN3_TX/SDDF0_CLK0
[11] SW_CTLH_AI_PTF10	T13	ADC3_SE24/PTF10/FTU7_CH4/MSC0_SDI1
[11] SW_BK_Backrest_AI_PTF9	Y15	ADC3_SE25/PTF9/FTU0_CH3/MSC0_SDI0
[8] CAN2_ERR_DI_PTI8	W14	ADC3_SE26/PTI8/FTU0_CH2/MSC0_EN1
[12] TEMP_5V_AN_PTI7	Y14	ADC3_SE27/PTI7/FTU0_CH1/MSC0_EN0
[23] TPS2HB16_OUT1_AI_PTI6	Y13	ADC3_SE28/CMP2_IN3/PTI6/FTU0_CH0
[18] 8718#2_IN1_PWM_PTB24	V13	ADC3_SE29/CMP2_IN2/PTB24/FTU1_CH2
[12] Temp_feet_SR_EX_AI_PTB21	W13	ADC3_SE30/CMP2_IN1/PTB21/FTU1_CH1/FCUART1_RX/ENET_PPS1/RTC_CLKOUT
[27] DZ300_PWMH_PTB20		ADC3_SE31/CMP2_IN0/PTB20/FTU1_CH0/FCUART1_TX/ENET_PPS0/SCG_CLKOUT

MCU 32bit FC7300F4MDD1A320T1B 2*M7 BGA320 300MHz 4MB flash ASIL-D

845504438

经纬恒润 JINGWEI HIRAIN

Design NO.	Rev	Sheet Name
825503205_ZCUP_SCH	V1.3	MCU_01

Size	Designer / Date	Check / Date	Confirm / Date
	Sen.Li/2024.08.01	Jianwei.Yao/2024.08.01	Qinghua.Diao/2024.08.01

Date: Tuesday, August 13, 2024 Sheet 5 of 32

U5000B

[21] 2HB35#4_SEL2_DO_PTA1	B15	PTA0/FTU4_CH6/FLEXCAN5_RX/SENT1_RXD2/FTU2_QD_PHA/FCUART0_CTS/TRGSEL_OUT3 未使用的PORT软件配置为低
[19] 8718#3_IN3_PWM_PTA2	F14	PTA1/FTU4_CH4/SENT1_RXD0/FTU1_QD_PHA/FCUART0_RTS/TRGSEL_OUT0
[16] RPDPW_DIPU_WAKE_PTA3	G15	PTA2/FTU2_CH3/FCIIC0_SDA/MSC1_FCLP/FCUART0_RX
[4] SPI0_CS3_PTA11	E19	PTA3/FTU2_CH2/FCIIC0_SCL/FCUART0_TX
[10]EDM_EN1_PWM_DO_PTA13	B6	PTA11/FTU3_CH0/FLEXCAN1_TX/FCSPI0_PCS3/NMI_b----(PD0)
[18]8718_PD1_EN_PTA14	A7	PTA13/FTU0_CH3/CMP1_OUT/FCUART0_RX/FTU2_QD_PHA----(PD0)
[21] 2HB35#3_PWM_EN1_PTA16	E10	PTA14/FTU_FLT17/AONTIMER0_CLK1/CMP1_OUT/FCUART0_TX/TRGSEL_IN13----(PD0)
[27] DZ300_PWM1-6_PTA26	F12	PTA16/FTU6_CH2/FCSMU_PIN0
	L5	CMP0_IN1/PTA26/FTU2_CH2
[21] VN9D#1_CLK_PTB8	B17	PTB8/FTU4_CH2/FLEXCAN4_TX/MSC1_SDI0/FCUART1_CTS
[16] PDODOS_DIPU_WAKE_PTB9	B20	PTB9/FTU2_CH7/TRGSEL_OUT1
[3] UB_SW_EN1_DO_PTB10	D19	PTB10/FTU2_CH5/TRGSEL_OUT2
[22] 2HB35#2_SEL2_DO_PTC6	A13	PTC6/FCUART1_RX/FTU3_CH2/FTU1_QD_PHB
[27] DZ300_PWM4-5_PTC25	E20	PTC25/FTU3_CH3/FCUART5_RTS/FCSPI5_PCS0/FLEXCAN2_TX
[23] 2HB16#2_PWM_EN1_PTC26	A11	PTC26/FTU9_CH7/FLEXCAN2_TX
[12] VCCSV0_SW_EN_DO_PTD2	D20	PTD2/FTU2_CH0/FCSPI1_SCK/TRGSEL_IN5
[19] 8718#3_IN2_PWM_PTD3	H16	PTD3/FTU3_CH7/FCSPI1_SIN/TRGSEL_IN4
[18] 8718#2_IN2_PWM_PTD4	G18	PTD4/FTU3_CH6/FCSPI1_SOUT/FTU_FLT16
[9] LIN6_TX_PTD21	H16	PTD21/FTU3_CH5/FCUART5_TX/FTU9_CH7/ISP_EN_B
[27] DZ300_DIR1H_PTD22	P20	PTD22/FTU9_CH6/FCSPI5_SCK
[22] 2HB35#2_DO_EN2_PTD24	F18	PTD24/FTU2_CH4/MSC1_SOP
[16] RPDODOS_DIPU_WAKE_PTD25	E18	PTD25/FTU2_CH6/FCUART4_RTS
[9] LIN_NSLP_PTD26	C17	PTD26/FTU4_CH0/FLEXCAN0_TX/FCUART4_CTS
[8] CAN3_ERR_DI_PTD27	A18	PTD27/FTU4_CH1/FLEXCAN0_RX/MSC1_EN0
[16]RPDC/IBR_DIPU_PTD28	A17	PTD28/FTU4_CH3/FLEXCAN4_RX
[26] Power_Relay_Drive6_PTD29	A16	PTD29/FTU4_CH5/SENT1_RXD1/FTU1_QD_PHB/MSC1_EN1
[3] VCCSV0_VTRK2_EN_DO_PTD30	A15	PTD30/FTU4_CH7/FLEXCAN5_TX/SENT1_RXD3/FTU2_QD_PHB/MSC1_SDI1
[19] 8718#3_NFAULT_DI_PTE3	F1	OSC32K_EXTAL/PTE3/FTU0_CH2/FTU_FLT1/FTU_TCK0/TRGSEL_IN6----(InputOnly)
[18] 8718#2_NFAULT_DI_PTE14	E1	OSC32K_XTAL/PTE14/FTU0_CH3/FTU_FLT0----(InputOnly)
[4] SPI0_SCK_PTE0	E8	CMP1_IN4/PTE0/FCUART0_CTS/FTU_TCK1/FCIIC1_SDA/FCSPI0_SCK/FTU_FLT19----(PD0)
[4] SPI0_MISO_PTE1	C7	CMP1_IN5/PTE1/FCUART0_RTS/FCIIC1_SCL/FCSPI0_SIN/FTU_FLT18----(PD0)
[28] LIN8_TX_PTE4	J2	CMP0_IN0/PTE4/FTU2_QD_PHB/FCUART7_TX
[4] 70331_ERROR_PTE17	B12	PTE17/FTU6_CH1/FCSMU_PIN1
[24] FBLW_PWM3_OUT_PTE23	B7	CMP1_IN6/PTE23/FTU0_CH4/FLEXCAN1_RX/CMP2_OUT/FCSPI0_PCS2----(PD0)
[10] EDM_EN2_PWM_DO_PTE24	A6	CMP1_IN7/PTE24/FTU0_CH5/FLEXCAN1_TX/FCSPI0_PCS1----(PD0)
[14] DC_Push_DIPU_WAKE_PTF2	F16	PTF2/FCUART6_RTS/FTU8_CH0/FCUART8_RX
[18] 8718#2_NSLEEP_DO_PTF4	H1	PTF4/FCUART8_CTS
[14] UB_POLLING_EN_DO_PTF5	J3	PTF5
[23] 2HB16#3_PWM_EN1_PTF6	P5	PTF6/FTU6_CH4
[24] DLE_PWM4_OUT_PTF16	H18	PTF16/FTU9_CH5/FCSPI5_SIN
[3] UB_SW_EN2_DO_PTF17	G19	PTF17/FTU_FLT21/FTU9_CH6/FCSPI5_SOUT
[21] VN9D#1_SPI4_CS3_PTF18	C14	PTF18/FCSPI4_PCS3/FTU8_CH7/FCUART1_TX/MSC1_EN/----(HSpad)
[25] BD4LD650_SPI4_CS2_PTF19	B14	PTF19/FCSPI4_PCS2/FTU8_CH1/FCUART1_RX/MSC1_SDI2
[20] 8908#2_SPI4_CS1_PTF20	C13	PTF20/FCSPI4_PCS1/FTU6_CH2/FLEXCAN2_RX/MSC1_EN3/TRGSEL_IN15----(HSpad)
[8] CAN1_ERR_DI_PTF21	C8	PTF21/FTU3_CH6/FCIIC1_SCL/CMP0_OUT/RTC_CLKOUT----(PD0)
[19] 8718_PD2_EN_PTF22	F9	PTF22/FTU3_CH7/FCIIC1_SDA/CMP1_OUT----(PD0)
[29] EXTI/O_A1_PTF24	K2	CMP0_IN3/PTF24/FTU4_CH6/FCSPI2_PCS3
[29] 74HC15_SW1_PTG0	C20	PTG0/FCUART6_CTS/FTU8_CH1/FCUART8_TX
[8] CAN4_TX_PTG13	N20	PTG13/SDDF0_CH0/FLEXCAN4_TX
[8] CAN4_RX_PTG14	N15	PTG14/SDDF0_CH1/FLEXCAN4_RX
[16] PDCUSS_DIPU_PTG15	C19	PTG15/FCIIC0_SCL/MSC1_EN0/TRGSEL_OUT2
[16] PDPW_DIPU_WAKE_PTG16	D18	PTG16/FCIIC0_SDA/MSC1_SDI0/TRGSEL_OUT3
[23] 2HB16#1_SEL2_DO_PTG17	A19	PTG17/MSC1_EN1/FTU5_QD_PHA
[15] ClimateON/OFF Switch_DIPU_PTG18	B13	PTG18/FCSPI4_PCS0/FTU1_CH0
[25,20,21] SPI4_SCK_PTG19	F13	PTG19/FCSPI4_SCK/FTU1_CH1
[25,20,21] SPI4_MISO_PTG20	E12	PTG20/FCSPI4_SIN/FTU1_CH2/FLEXCAN3_TX
[21] 2HB35#5_DO_EN2_PTH4	P6	PTH4/FTU4_QD_PHA/ENET_PPS0/ETM_TRACE_D12
[20] 8908#1_NFAULT_DI_PTH5	V1	PTH5/FTU4_QD_PHB/ENET_PPS1/ETM_TRACE_D13
[25] BV1LB040_ST_PTH11	P18	PTH11/MSC0_FCLP----(HSpad) 未使用的PORT软件配置为低
	B18	PTH15/MSC1_SDI1/FTU5_QD_PHB
[26] Power_Relay_Drive1_PTH16	C16	PTH16/FCSPI5_PCS0/FTU8_CH2/MSC1_FCLP----(HSpad)
[26] Power_Relay_Drive2_PTH17	E16	PTH17/FCSPI5_SCK/FTU8_CH3/MSC1_SOP----(HSpad)
[26] SPI4_MOSI_PTH18	C12	PTH18/FCSPI4_SOUT/FTU1_CH3/FLEXCAN3_RX
[23] 2HB16#2_PWM_EN2_PTH23	A12	PTH23/FTU9_CH6/FLEXCAN2_RX
[16] RPDCUSS_DIPU_PTI1	F2	PTI1/FCUART8_RX
[21] 2HB35#5_SEL2_DO_PTI3	R5	PTI3/ETM_TRACE_D14
[14] RPDLS_FB_DIPU_PTI4	U3	PTI4/ETM_TRACE_D15
[14] PDLS_FB_DIPU_PTI5	R3	PTI5/FTU6_CH3
[21] 2HB35#5_DO_EN1_PTI9	P20	PTI9/MSC0_SOP----(HSpad)
[9] LIN5_TX_PTI10	N18	PTI10/FCUART4_TX
[9] LIN5_RX_PTI11	N19	PTI11/FCUART4_RX
[26] Power_Relay_Drive3_PTI15	E14	PTI15/FCSPI5_SIN/FTU8_CH4/MSC1_EN0/FLEXCAN1_TX----(HSpad)
[26] Power_Relay_Drive4_PTI16	B16	PTI16/FCSPI5_SOUT/FTU8_CH5/MSC1_EN1/FLEXCAN1_RX----(HSpad)
[26] Power_Relay_Drive5_PTI17	C15	PTI17/FTU8_CH6/FLEXCAN2_TX
[9] LIN3_TX_PTI18	E11	PTI18/SENT1_RXD2/FTU1_CH6/FCUART2_TX
[9] LIN3_RX_PTI19	A9	PTI19/SENT1_RXD3/FTU1_CH7/FCUART2_RX
	C10	PTI20/FTU_TCK2/FTU_FLT20/FTU6_CH7 未使用的PORT软件配置为低
[23] 2HB16#2_SEL2_DO_PTI21	M5	CMP0_IN4/PTI21/FTU4_CH5/FCSPI2_PCS2
[8] CAN4_ERR_DI_PTI22	L1	CMP0_IN5/PTI22/FTU4_CH4
[19] 8718#3_NSLEEP_DO_PTI23	K3	CMP0_IN2/PTI23/FTU4_CH7
[17] HALL_BHS_PWMI_PTB4	W4	PTB4/FTU7_CH7/FCUART9_RX/ENET_MDIO/TRGSEL_IN1----(VDD_HV_B)
[4] PMIC_EN_PTB5	V4	PTB5/FTU3_CH2/FCSPI1_SDA/ENET_MDC/TRGSEL_IN0----(VDD_HV_B)
[15] SeatOccptAtRowSecPass_DIPU_PTB22	W8	PTB22/FTU8_CH3/FCUART1_TX/ETM_TRACE_D5/FCSPI3_PCS2----(VDD_HV_B/UHSpad)
[22] UB_OL_EN_DO_PTB23	W11	PTB23/FTU_FLT9/FCSPI2_PCS0/FTU7_CH3/ENET_RXD3----(VDD_HV_B/HSpad)
[23] 2HB16#3_PWM_EN2_PTB26	Y4	PTB26/FTU8_CH8/ENET_COL/FCSPI3_SIN----(VDD_HV_B)
[29] EXTI/O_A0_PTB30	V5	PTB30/FTU6_CH1/FCIIC1_SCL/ENET_CRS/FCSPI3_SOUT----(VDD_HV_B)
[25] BD4LD650_IN1_EN_PTB31	Y10	PTB31/FTU7_CH1/FCSPI2_SCK/ENET_RXD1----(VDD_HV_B/HSpad)
[17] BLOWER_PWM_SW_PTC0	W9	PTC0/FTU8_CH6/ETM_TRACE_D6/ENET_RXD1/FCSPI3_PCS1----(VDD_HV_B/UHSpad)
[17] HALL_CTHS_PWMI_PTC1	V9	PTC1/FTU7_CH5/ENET_RXD0/FCSPI3_PCS0----(VDD_HV_B/UHSpad)
[9] LIN1_RX_PTC2	Y5	PTC2/FTU6_CH3/FCUART0_RX/ETM_TRACE_CLKOUT/ENET_TXD0----(VDD_HV_B/UHSpad)
[9] LIN1_TX_PTC3	W5	PTC3/FTU6_CH2/FCUART0_TX/ENET_TX_ER/FCSPI3_PCS0----(VDD_HV_B)
[17] HALL_HHS_PWMI_PTC14	W12	PTC14/FTU7_CH4/FCUART1_RX/FCIIC1_SDA/TRGSEL_IN9----(VDD_HV_B)
[16] RPDIOW_DIPU_WAKE_PTC15	Y6	PTC15/FTU8_CH4/FCSPI2_PCS3/SCG_CLKOUT/ENET_RXD3/FCSPI3_PCS3----(VDD_HV_B/UHSpad)
[15] FDS_DIPU_PTC16	W10	PTC16/FTU_FLT7/FCSPI2_SOUT/TRGSEL_OUT7/ENET_RXD0/FCUART5_RX----(VDD_HV_B/HSpad)
[23] 2HB16#3_SEL2_DO_PTC17	V11	PTC17/FTU_FLT6/TRGSEL_OUT6/ENET_RX_ER/FCUART5_TX----(VDD_HV_B)
[4] 70331_PG_PTC18	Y11	PTC18/FTU7_CH2/FCSPI2_SIN/ENET_RXD2----(VDD_HV_B/HSpad)
[25] BV1LB040_EN_PTD5	W6	PTD5/FTU6_CH4/FCUART2_CTS/ETM_TRACE_D2/ENET_TXD3/FCSPI3_SIN/TRGSEL_IN7----(VDD_HV_B/UHSpad)
[15] AutoDefrostSwitch_DIPU_PTD6	V6	PTD6/FCUART2_RX/FLEXCAN3_RX/ETM_TRACE_D1/ENET_TXD2/FCSPI3_SCK----(VDD_HV_B/UHSpad)
[20] 8908#2_NFAULT_DI_PTD7	Y6	PTD7/FCUART2_TX/FLEXCAN3_TX/ETM_TRACE_D0/ENET_TXD1----(VDD_HV_B/UHSpad)
[17] HALL_LHS_PWMI_PTD8	V10	PTD8/FTU7_CH0/FCSPI2_PCS2/FTU1_CH6/ENET_RX_DV_CTL/FCUART4_RX----(VDD_HV_B/HSpad)
[16] PDIDOW_DIPU_WAKE_PTD9	Y9	PTD9/FTU8_CH7/FCSPI2_PCS1/ETM_TRACE_D7/ENET_RXD2/FCUART4_TX----(VDD_HV_B/UHSpad)
[22] 1HB08#1_PWM_EN_PTD10	Y7	PTD10/FTU6_CH7/FTU2_QD_PHB/ENET_RX_CLK----(VDD_HV_B/HSpad)
[23] 2HB16#1_PWM_EN2_PTD11	V7	PTD11/FTU6_CH6/FTU2_QD_PHA/ETM_TRACE_D4/ENET_TX_CLK----(VDD_HV_B/UHSpad)
[23] 2HB16#1_PWM_EN1_PTD12	W7	PTD12/FTU6_CH5/FCUART2_RTS/ETM_TRACE_D3/ENET_TX_EN_CTL/FCSPI3_SOUT----(VDD_HV_B/UHSpad)
[21] 2HB35#4_PWM_EN1_PTE8	T6	PTE8/FTU6_CH1/FCUART9_RX/ENET_MDC/FCSPI3_SCK----(VDD_HV_B)
[28] SPI3_MISO_PTF8	W3	PTF8/FCSPI3_SIN/FTU_FLT5/TRGSEL_OUT4----(VDD_HV_B)
[28] SPI3_MOSI_PTG6	Y3	PTG6/FCSPI3_SOUT/TRGSEL_OUT3----(VDD_HV_B)
[28] DZ300_SPI3_CS_PTG7	R8	PTG7/FCSPI3_PCS0/TRGSEL_OUT2----(VDD_HV_B)
[29] 74HC15_SW2_PTG8	R9	PTG8/FTU8_CH0/FCUART3_TX/ENET_REF_CLK----(VDD_HV_B/HSpad)
[29] EXTI/O_STORGE_PTH6	R10	PTH6/FTU8_CH1/FCUART3_RX----(VDD_HV_B)
[29] EXTI/O_A2_PTH7	V8	PTH7/FTU_FLT8/FTU8_CH2/ENET_COL----(VDD_HV_B)
[17] AQS_PWM_SW_PTH8	V12	PTH8/FTU8_CH5/ENET_CRS----(VDD_HV_B)
[28] SPI3_SCK_PTH21	Y2	PTH21/FCSPI3_SCK/FTU_FLT4/TRGSEL_OUT5----(VDD_HV_B)
[4] 70331_INT_PTH22	Y12	PTH22/FTU7_CH6/FCIIC1_SCL----(VDD_HV_B)

R6002 1K 5% TP6002 (Z402)
R6000 100R 1% TP6001 (Z403)
R6001 100R 1% TP6004 (Z404)
R6003 1K 5% TP6005 (Z405)
R6004 1K 5% TP6003 (Z406)
R6005 1K 5% TP6006 (Z407)

Value = FC7300F4MDD1A320T1B

MCU 32bit FC7300F4MDD1A320T1B 2*M7 BGA320 300MHz 4MB flash ASIL-D

845504438

经纬恒润 JINGWEI HIRAIN

Design NO.	Rev	Sheet Name
825503205_ZCUP_SCH	V1.3	MCU_02

Size	Designer / Date	Check / Date	Confirm / Date
Custom	Sen.Li/2024.08.01	Jianwei.Yao/2024.08.01	Qinghua.Diao/2024.08.01
Date: Tuesday, August 13, 2024		Sheet 6 of 32	

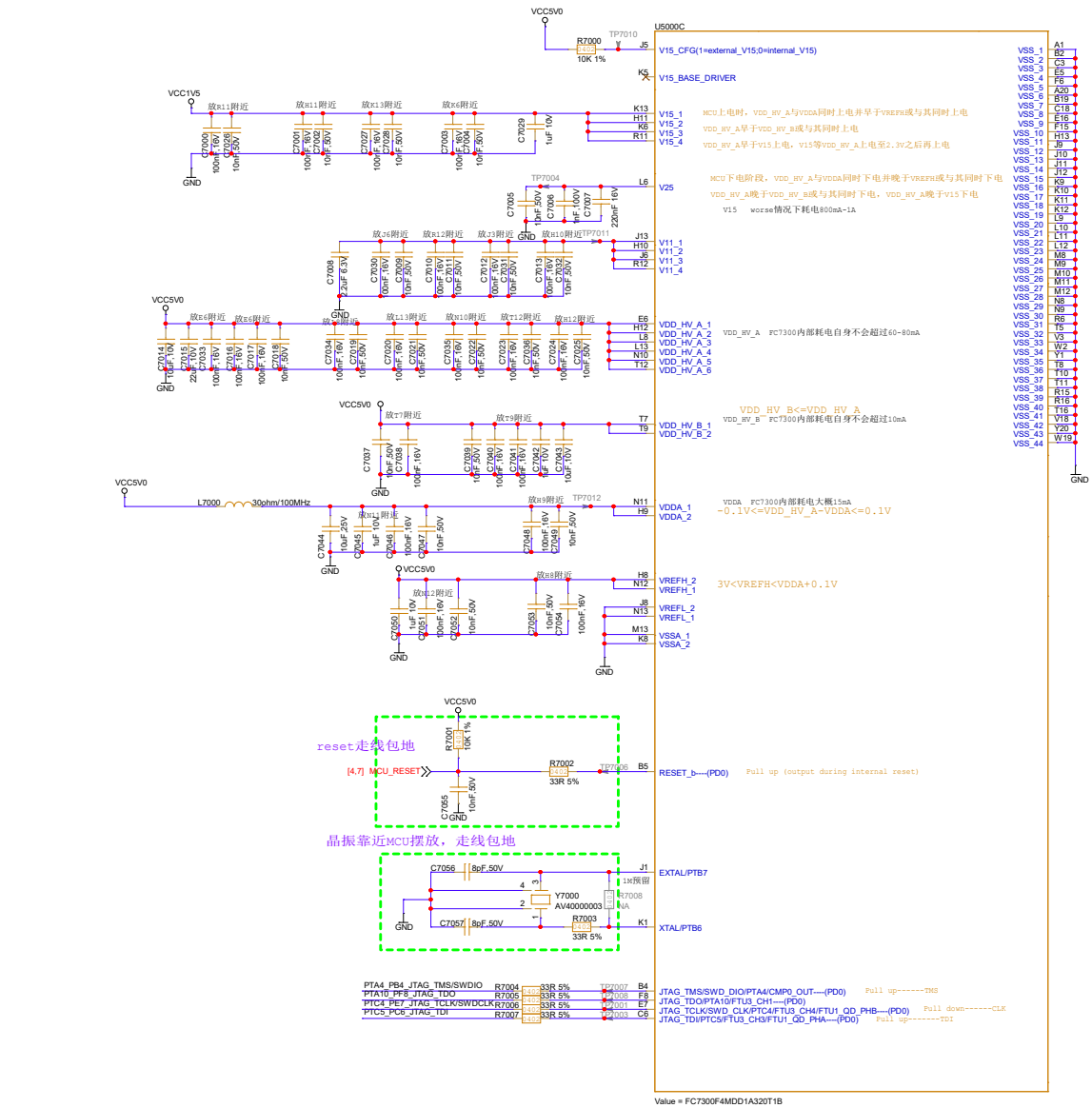

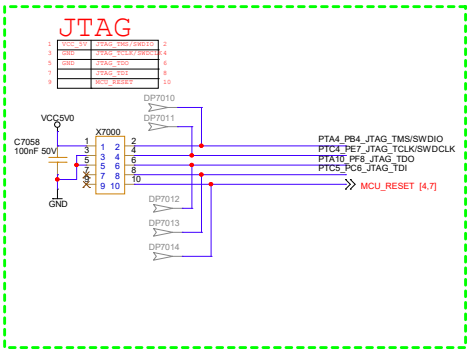

845504438

Design NO.	Rev	Sheet Name
825503205_ZCUP_SCH	V1.3	MCU_03

Size	Designer / Date	Check / Date	Confirm / Date
Custom	Sen.Li/2024.08.01	Jianwei.Yao/2024.08.01	Qinghua.Diao/2024.08.01
Date: Tuesday, August 13, 2024		Sheet 7 of 32	

经纬恒润 JINGWEI HIRAIN

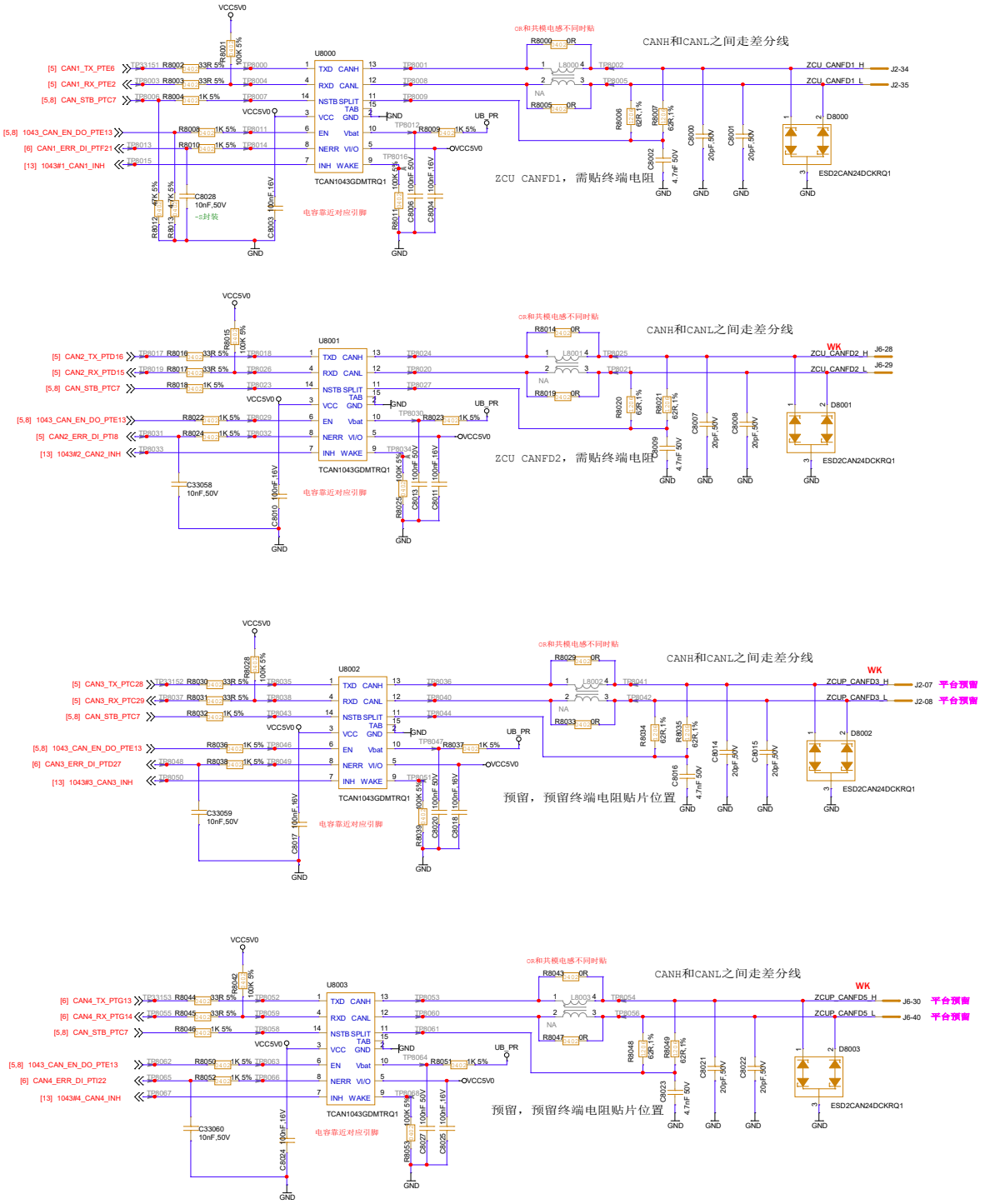

845504438

Design NO.	Rev	Sheet Name
825503205_ZCUP_SCH	V1.3	CAN

Size	Designer / Date	Check / Date	Confirm / Date
Custom	Sen.Li/2024.08.01	Jianwei.Yao/2024.08.01	Qinghua.Diao/2024.08.01

Date: Tuesday, August 13, 2024 | Sheet 8 of 32

经纬恒润 JINGWEI HIRAIN

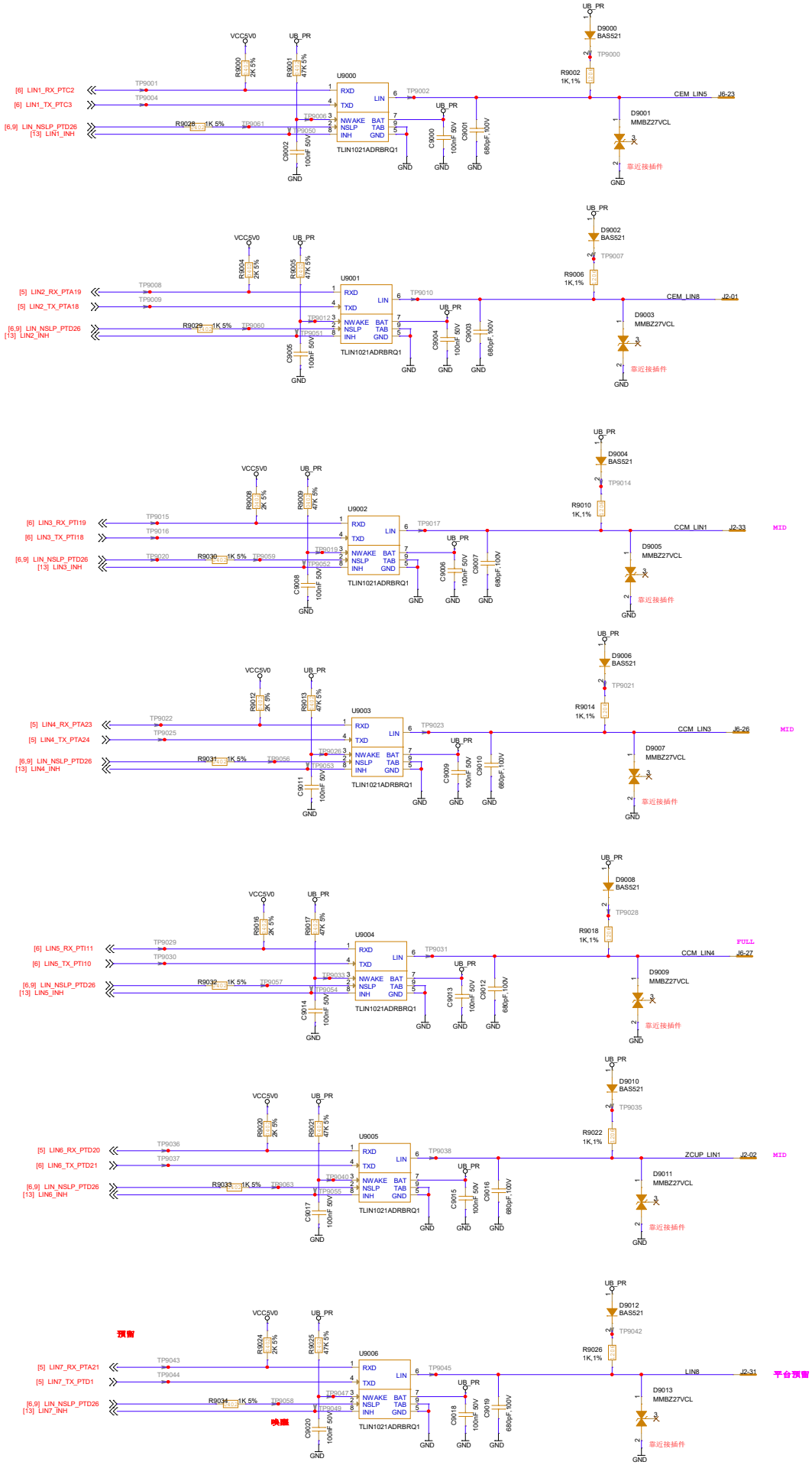

845504438

Design NO.	Rev	Sheet Name
825503205_ZCUP_SCH	V1.3	LIN

Size	Designer / Date	Check / Date	Confirm / Date
Custom	Sen.Li/2024.08.01	Jianwei.Yao/2024.08.01	Qinghua.Diao/2024.08.01
Date: Tuesday, August 13, 2024		Sheet 9 of 32	

经纬恒润 JINGWEI HIRAIN

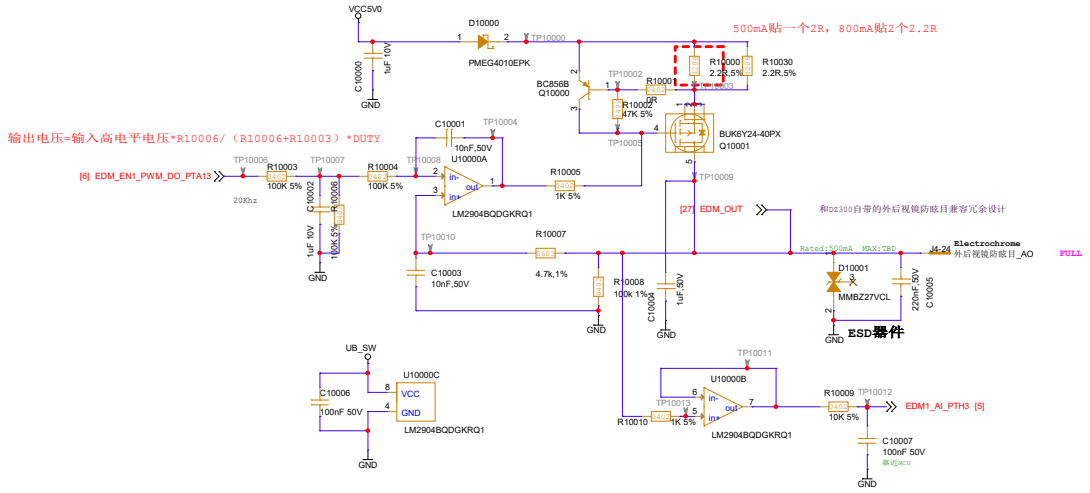

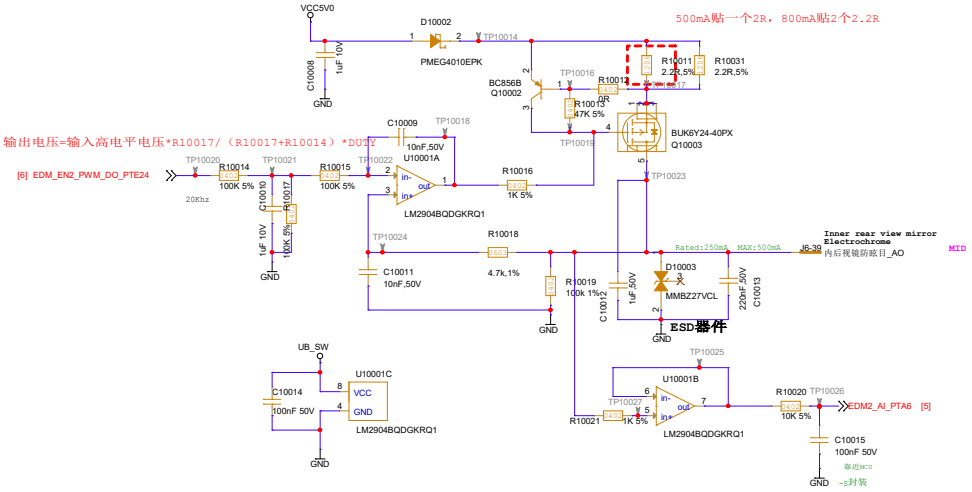

845504438

Design NO.	Rev	Sheet Name
825503205_ZCUP_SCH	V1.3	

Size	Designer / Date	Check / Date	Confirm / Date
Custom	Sen.Li/2024.08.01	Jianwei.Yao/2024.08.01	Qinghua.Diao/2024.08.01
Date: Tuesday, August 13, 2024		Sheet 10 of 32	

经纬恒润 JINGWEI HIRAIN

AI12V

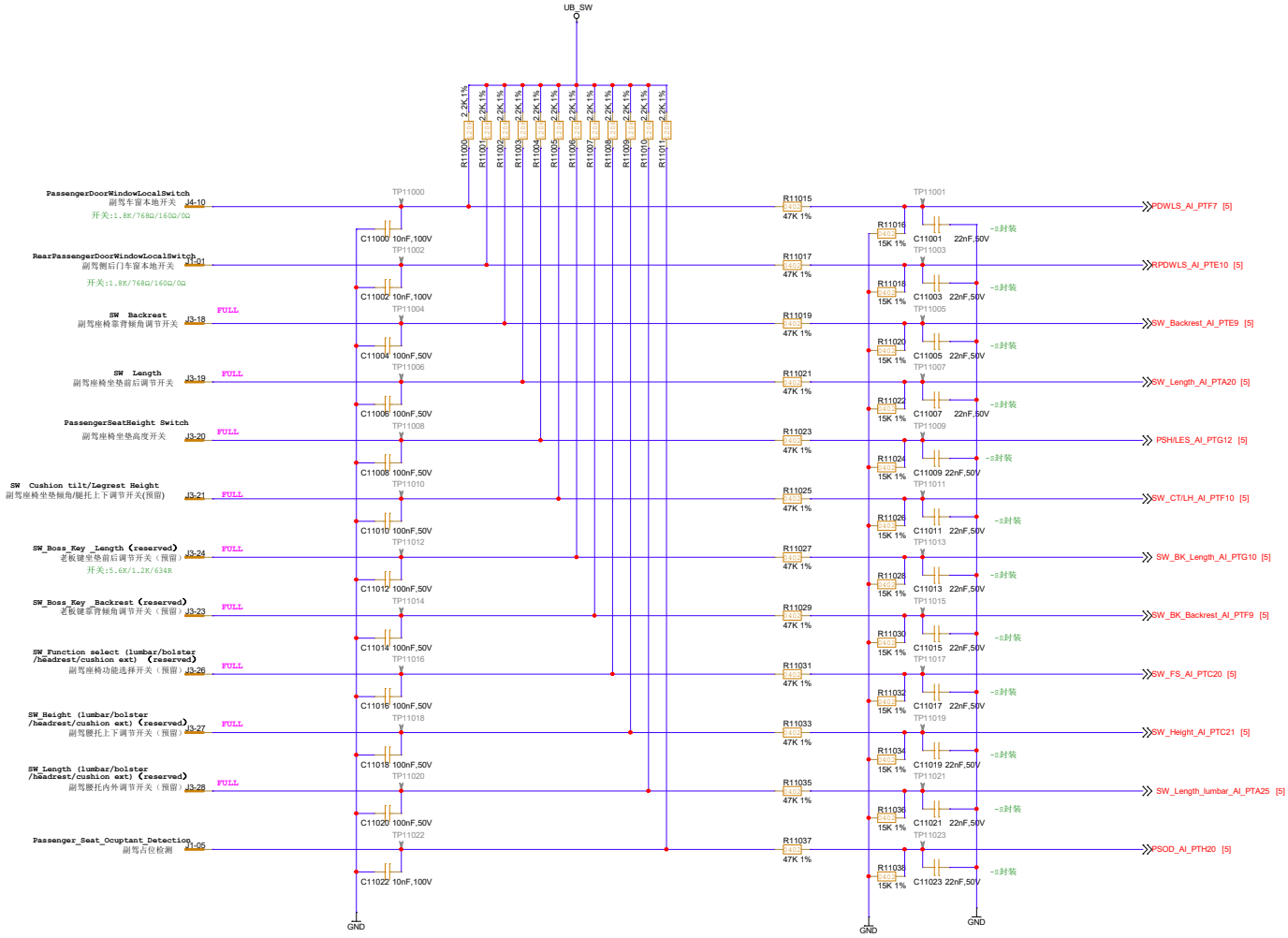

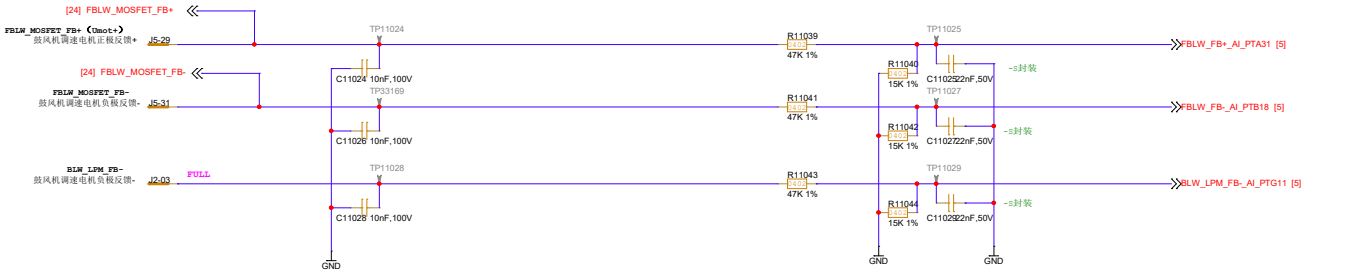

845504438

Design NO.	Rev	Sheet Name
825503205_ZCUP_SCH	V1.3	

Size	Designer / Date	Check / Date	Confirm / Date
Custom	Sen.Li/2024.08.01	Jianwei.Yao/2024.08.01	Qinghua.Diao/2024.08.01
Date: Tuesday, August 13, 2024		Sheet 11 of 32	

经纬恒润 JINGWEI HIRAIN

空调温度采集

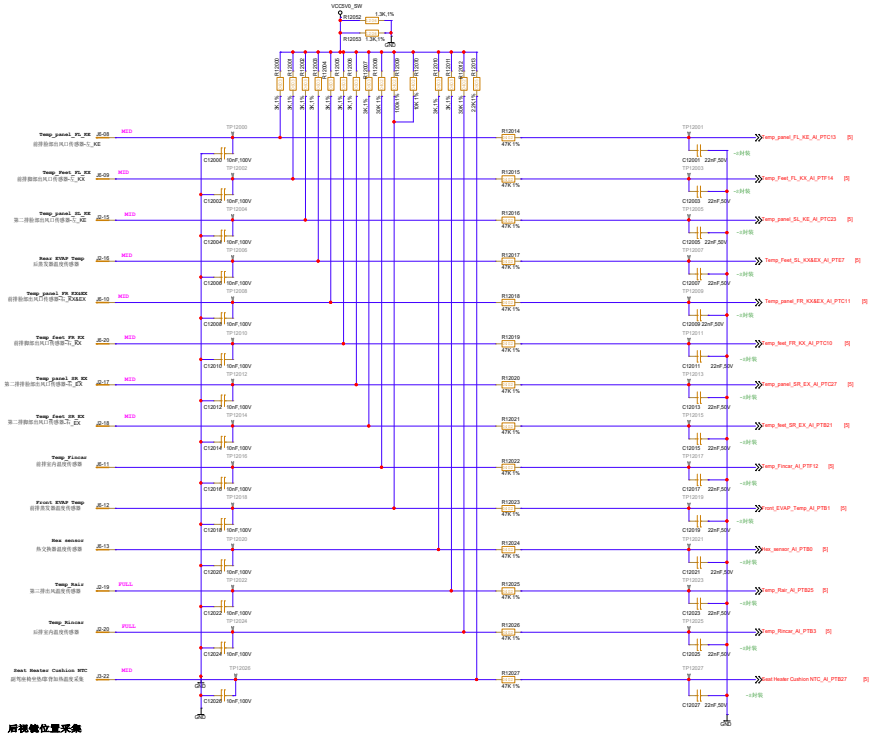

后视镜位置采集

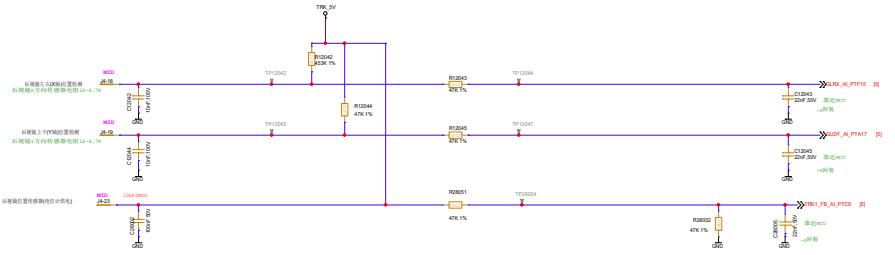

温度传感器采集

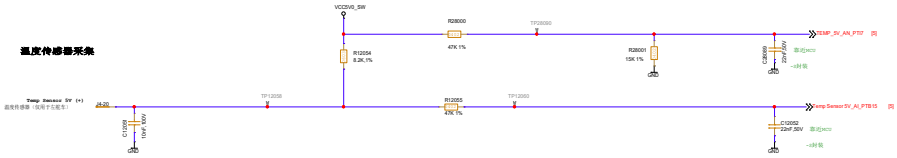

空调位置反馈采集

AI5V输入

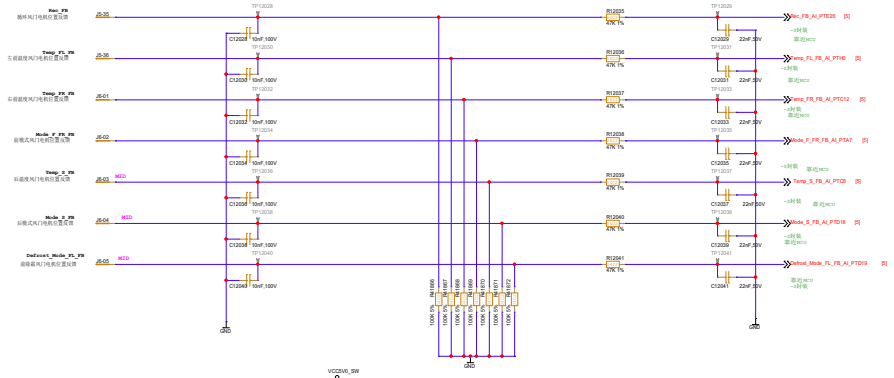

燃油泵液位采集

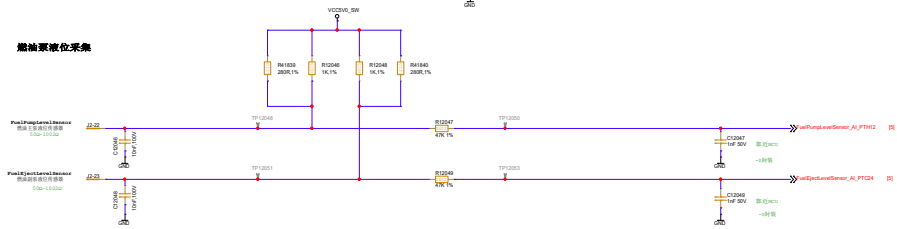

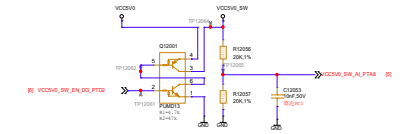

845304438

Design NO.	Rev	Sheet Name
825503205_ZCUP_SCH	V1.3	

Size	Designer / Date	Check / Date	Confirm / Date
C	Sen.Li/2024.08.01	Jianwei.Yang/2024.08.01	Qinghua.Diao/2024.08.01
Date: Tuesday, August 13, 2024	Sheet 12 of 33		

经纬恒润 JINGWEI HIRAIN

DIPD_外灯

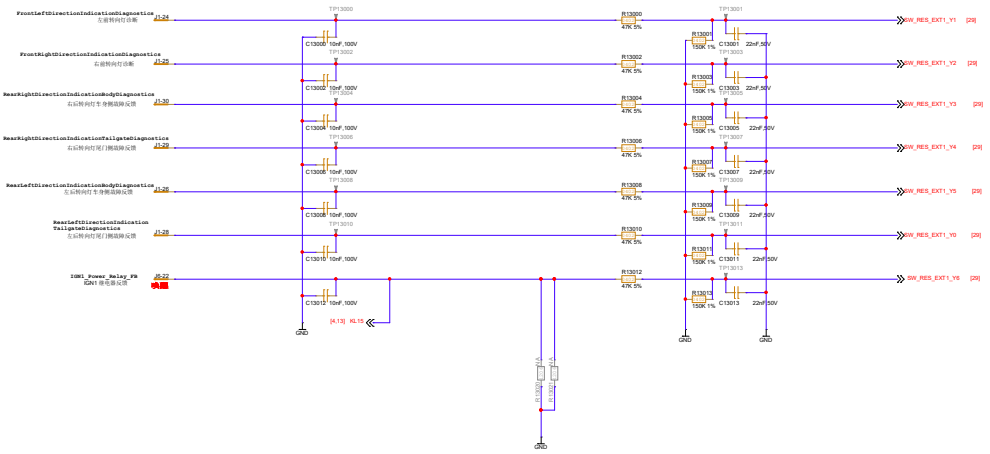

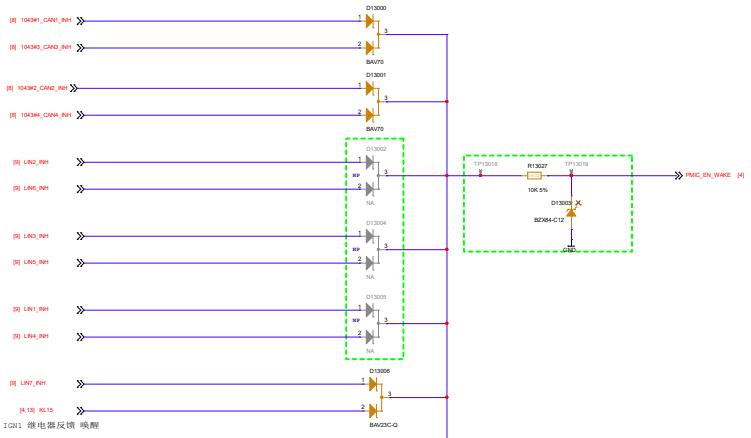

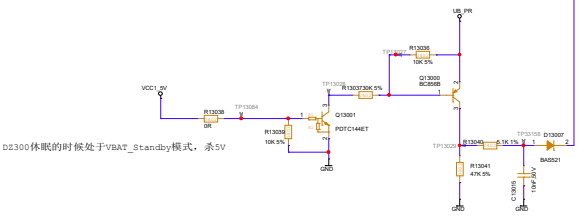

D2300休眠的时候处于VBAT_Standby模式，杀5V

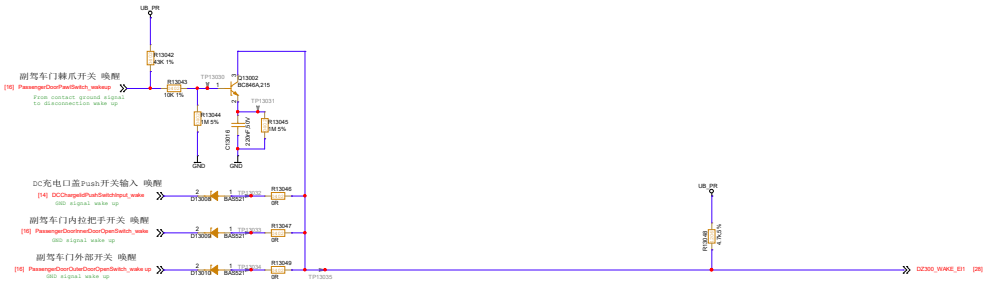

845504438

Design NO.	Rev	Sheet Name
825503205_ZCUP_SCH	V1.3	

Size	Designer / Date	Check / Date	Confirm / Date
Custom	Sen.Li/2024.08.01	Jianwei.Yao/2024.08.01	Qinghua.Diao/2024.08.01
Date: Tuesday, August 13, 2024		Sheet 15 of 32	

经纬恒润 JINGWEI HIRAIN

DIPU_门锁

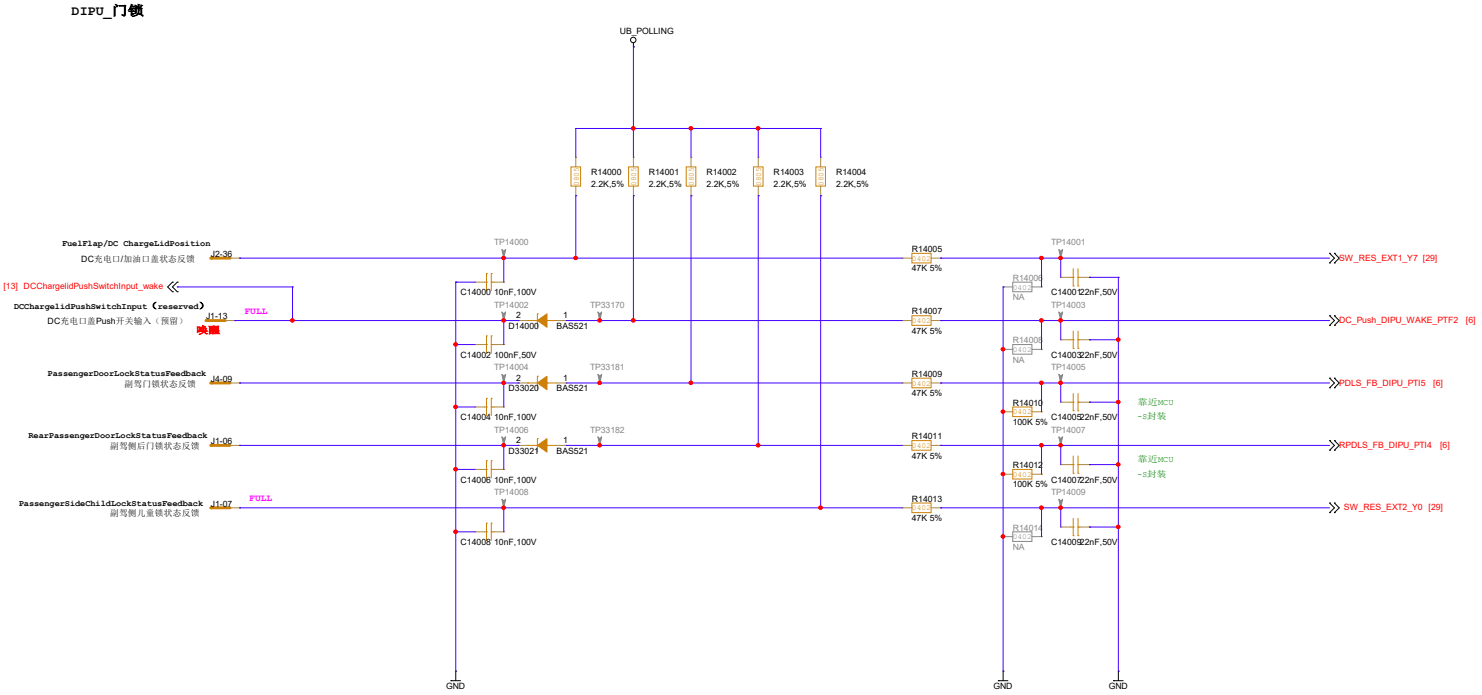

DIPU_隐藏门把手

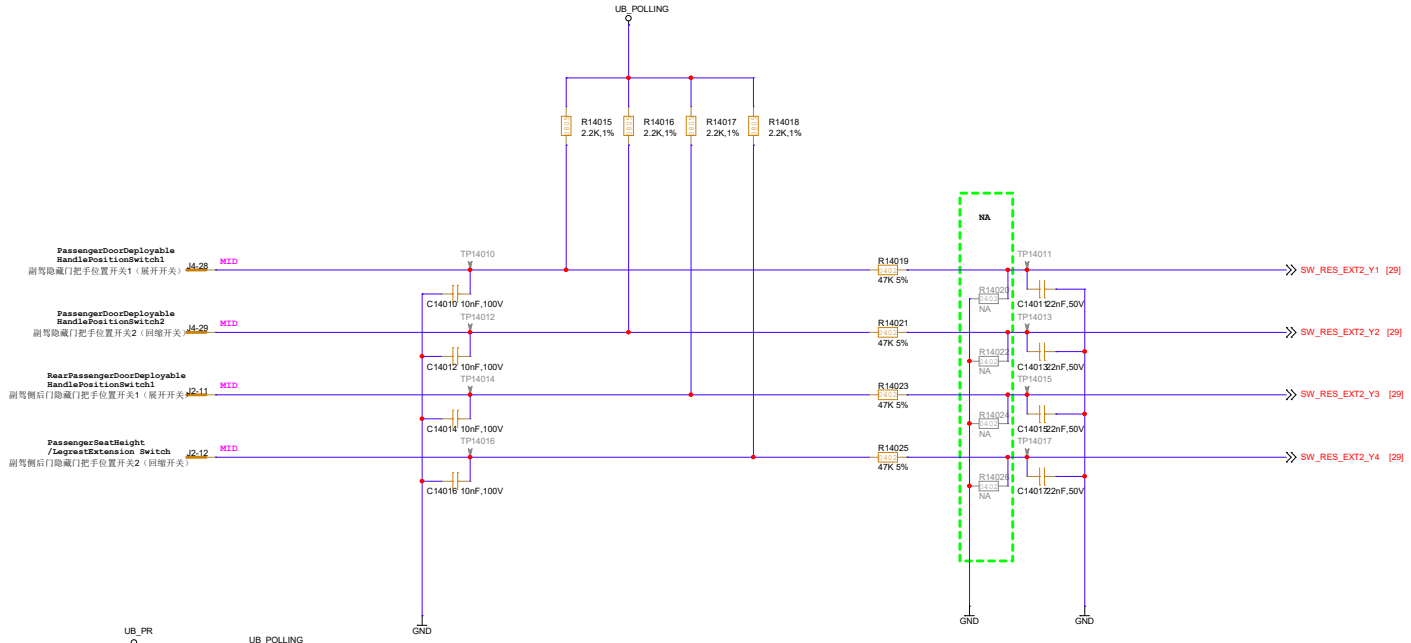

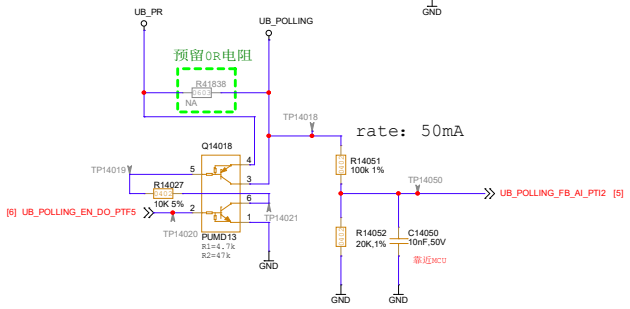

845504438

Design NO.	Rev	Sheet Name
825503205_ZCUP_SCH	V1.3	

Size	Designer / Date	Check / Date	Confirm / Date
Custom	Sen.Li/2024.08.01	Jianwei.Yao/2024.08.01	Qinghua.Diao/2024.08.01
Date: Tuesday, August 13, 2024		Sheet 14 of 32	

经纬恒润 JINGWEI HIRAIN

DIPU_空调

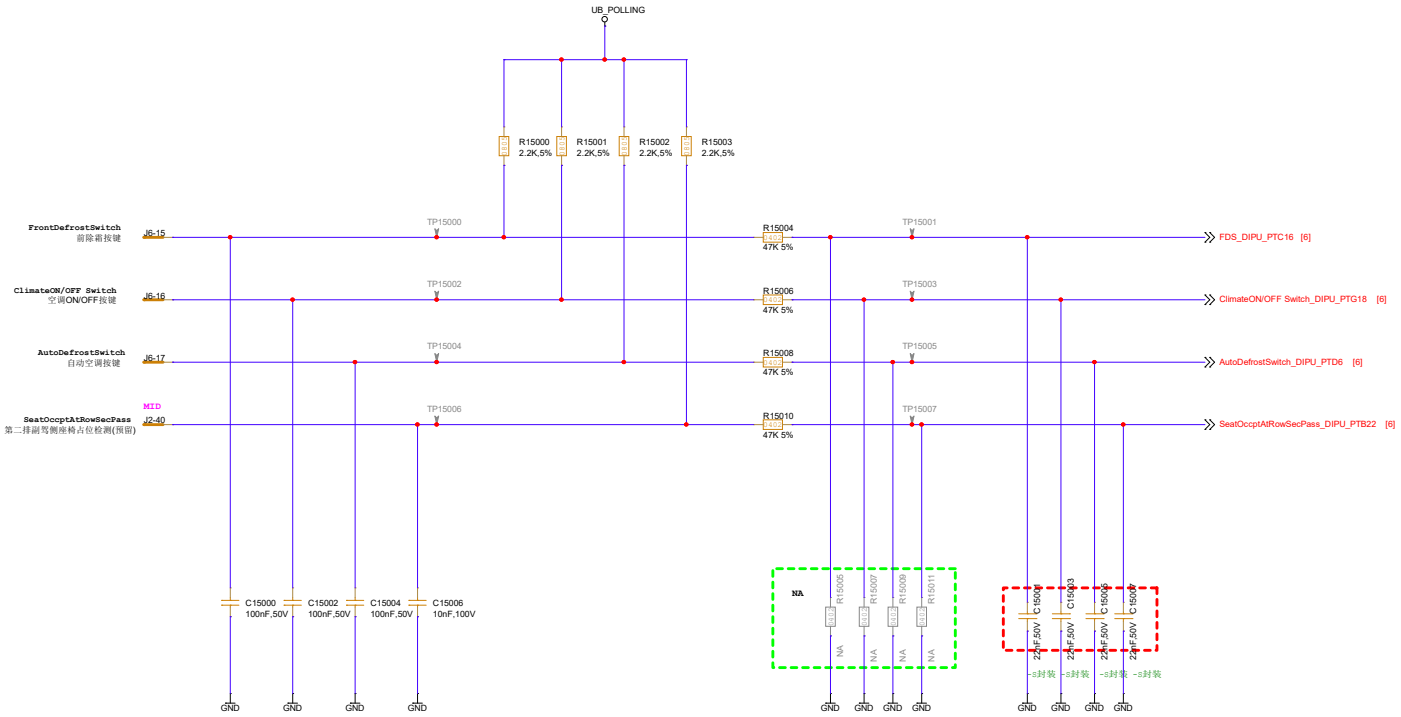

845504438

Design NO.	Rev	Sheet Name
825503205_ZCUP_SCH	V1.3	

Size	Designer / Date	Check / Date	Confirm / Date
Custom	Sen.Li/2024.08.01	Jianwei.Yao/2024.08.01	Qinghua.Diao/2024.08.01
Date: Tuesday, August 13, 2024		Sheet 15 of 32	

经纬恒润 JINGWEI HIRAIN

DIPU_电吸合释放

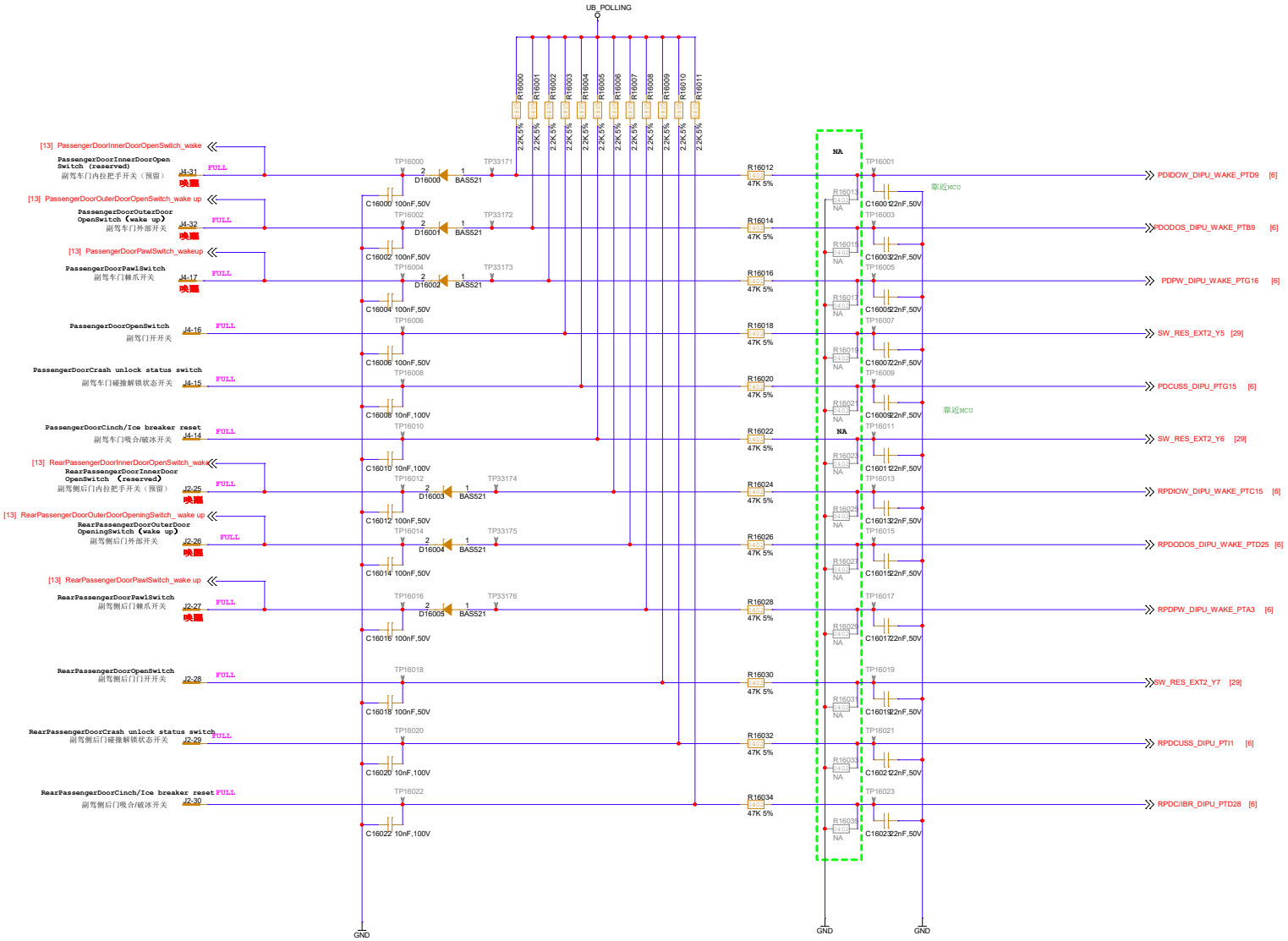

845504438

Design NO.	Rev	Sheet Name
825503205_ZCUP_SCH	V1.3	DIPU3

Size	Designer / Date	Check / Date	Confirm / Date
Custom	Sen.Li/2024.08.01	Jianwei.Yao/2024.08.01	Qinghua.Diao/2024.08.01
Date: Tuesday, August 13, 2024		Sheet 16 of 32	

经纬恒润 JINGWEI HIRAIN

空调PWM采集

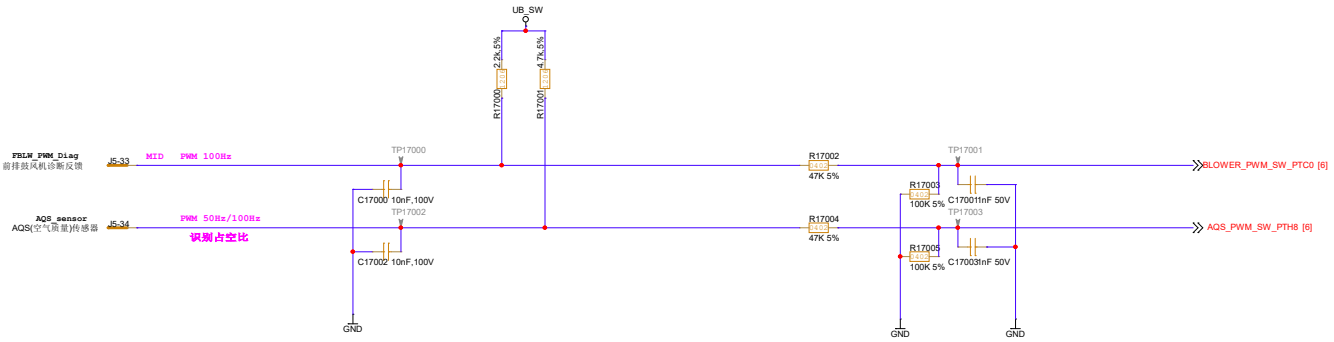

座椅霍尔采集

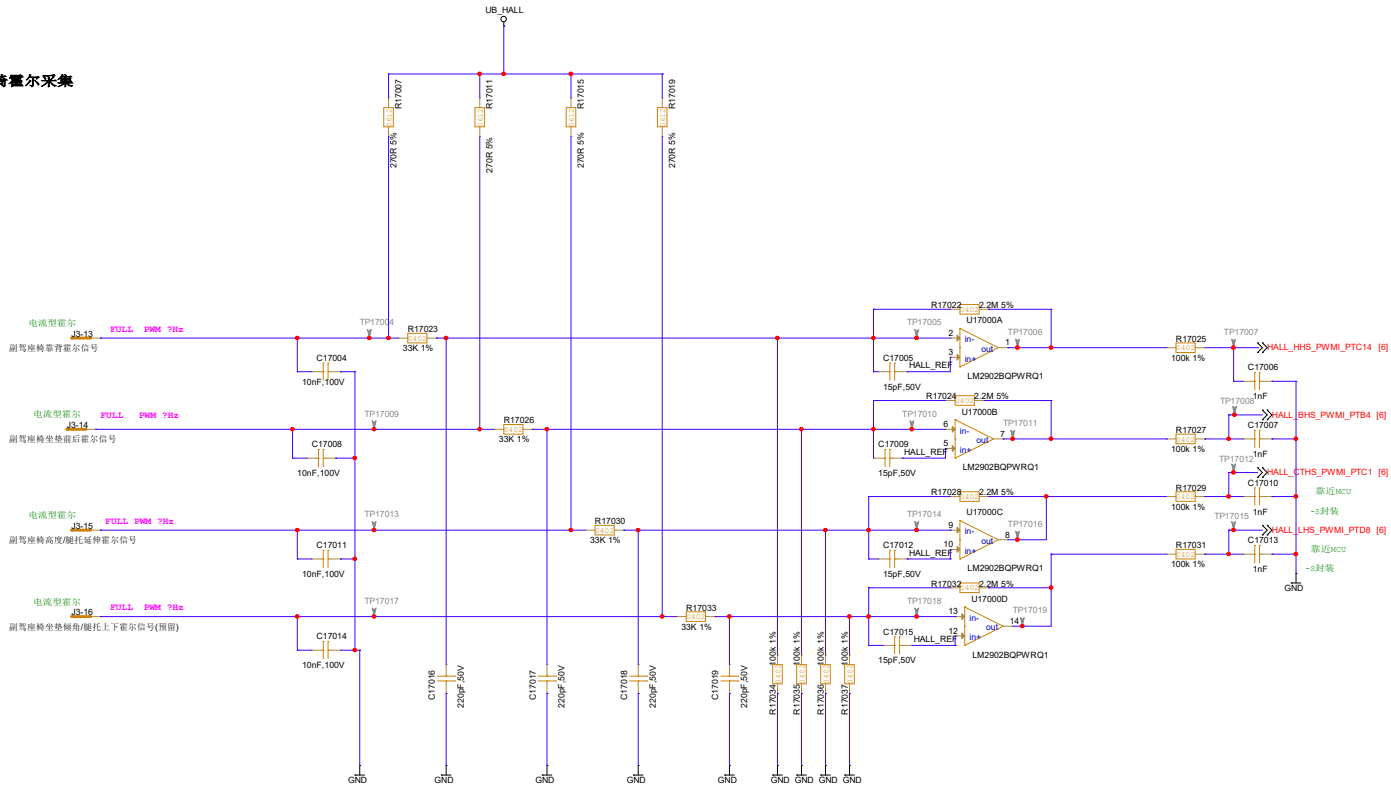

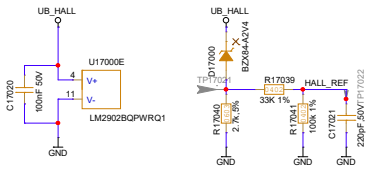

845504438

Design NO.	Rev	Sheet Name
825503205_ZCUP_SCH	V1.3	DIW

Size	Designer / Date	Check / Date	Confirm / Date
Custom	Sen.Li/2024.08.01	Jianwei.Yao/2024.08.01	Qinghua.Diao/2024.08.01
Date: Tuesday, August 13, 2024		Sheet 17 of 32	

经纬恒润 JINGWEI HIRAIN

DRV8718#2

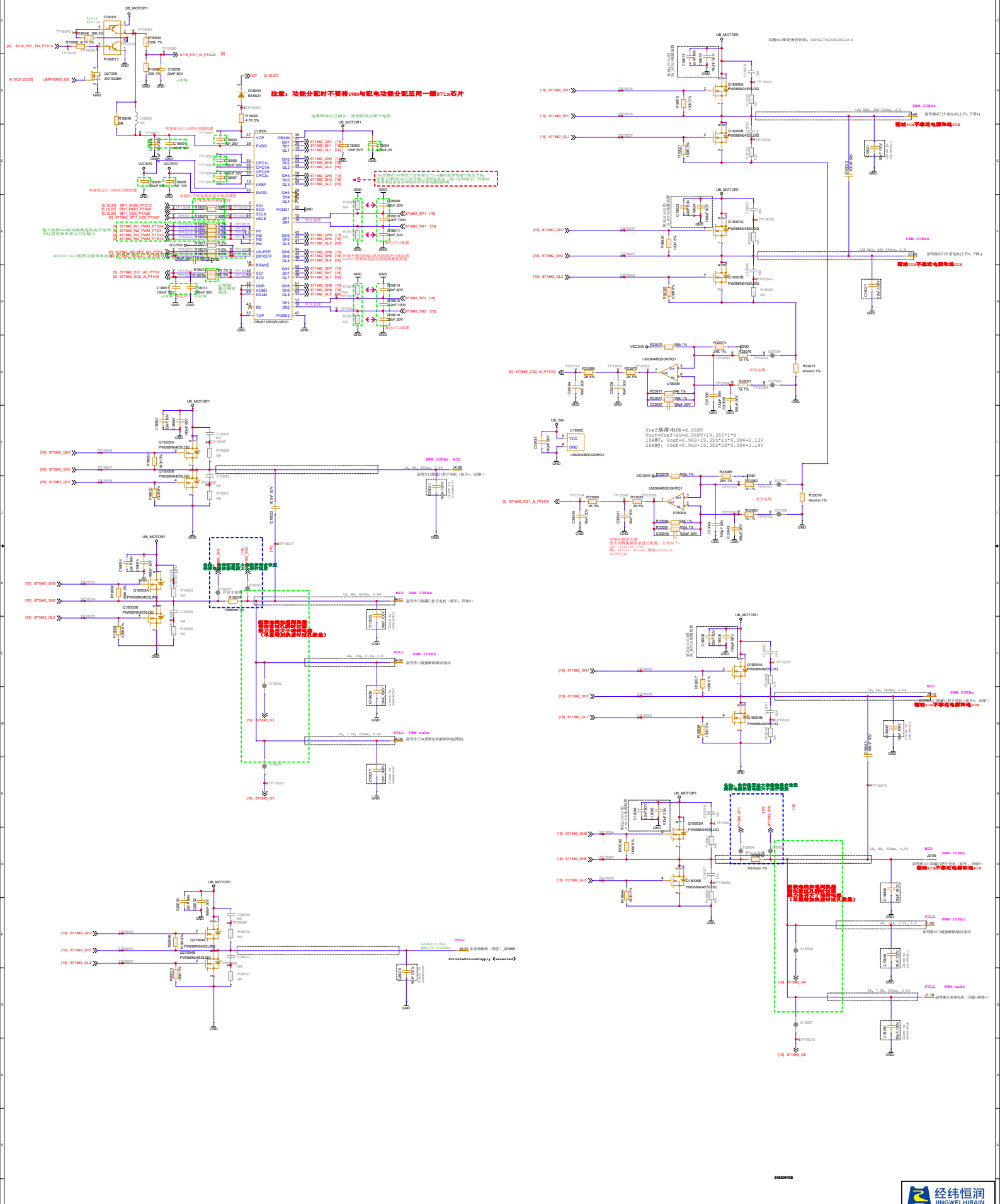

845504438

Design NO.	Rev	Sheet Name
825503205_ZCUP_SCH	V1.3	GATE DRIVER1

Size	Designer / Date	Check / Date	Confirm / Date
Custom	Sen.Li/2024.08.01	Jianwei.Yao/2024.08.01	Jinghua.Diao/2024.08.01
Date: Tuesday, August 13, 2024		Sheet 18 of 32	

经纬恒润 JINGWEI HIRAIN

DRV8718#3

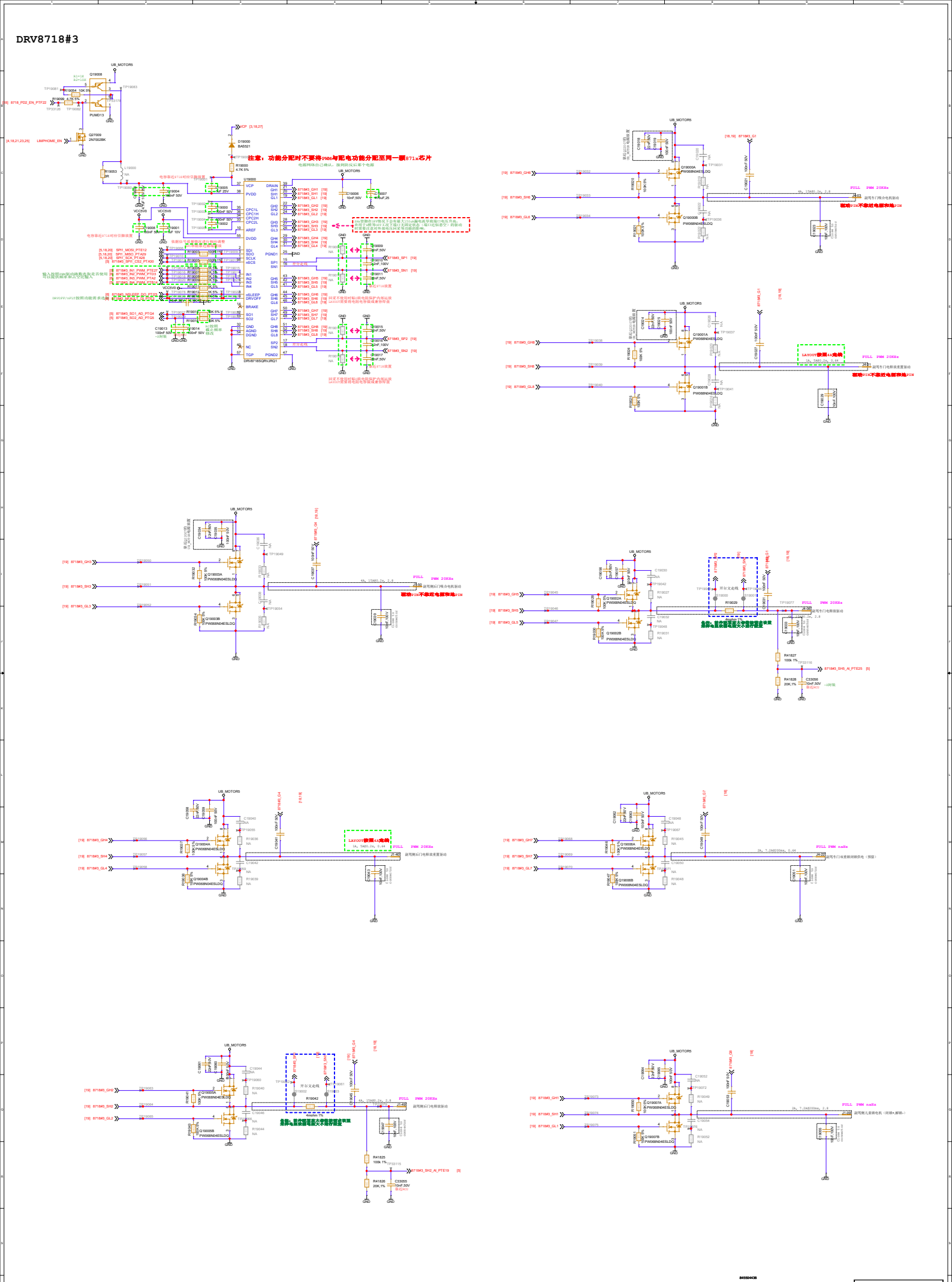

845504436

Design NO.	Rev	Sheet Name
825503205_ZCUP_SCH	V1.3	GATE DRIVER2

Size	Designer / Date	Check / Date	Confirm / Date
Custom	Sen.Li/2024.08.01	Jianwei.Yao/2024.08.01	Jinghua.Diao/2024.08.01

Date: Tuesday, August 13, 2024 | Sheet 19 of 32

经纬恒润 JINGWEI HIRAIN

#1

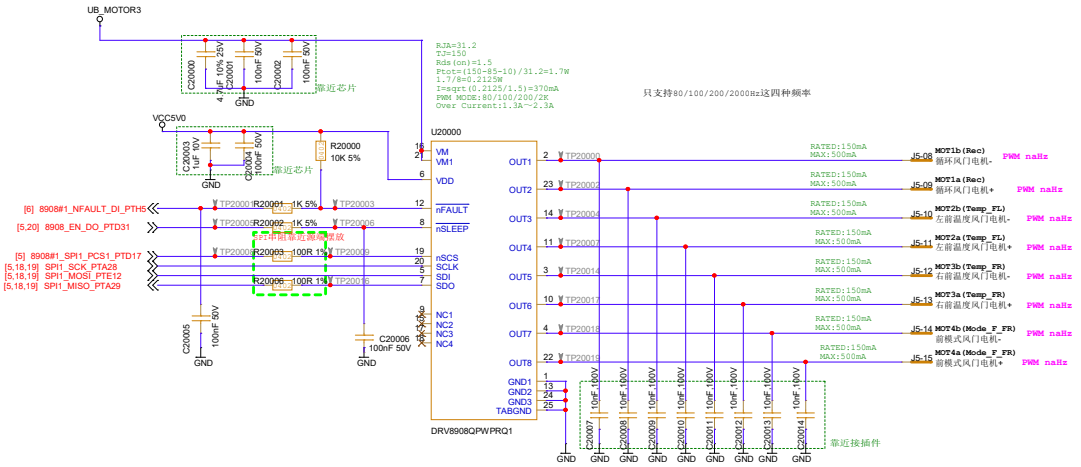

#2

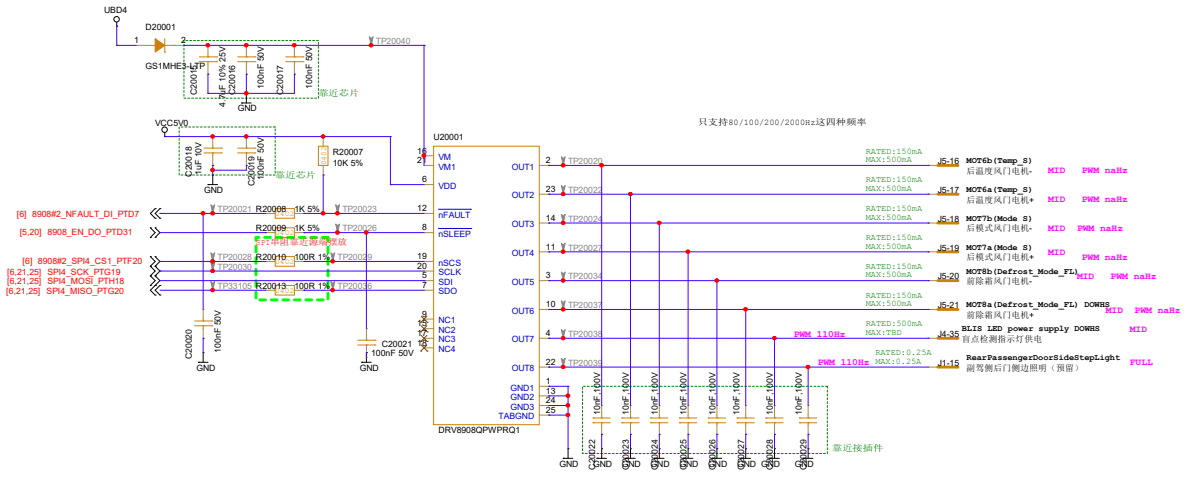

845504438

Design NO.	Rev	Sheet Name
825503205_ZCUP_SCH	V1.3	HS1

Size	Designer / Date	Check / Date	Confirm / Date
Custom	Sen.Li/2024.08.01	Jianwei.Yao/2024.08.01	Qinghua.Diao/2024.08.01

Date: Tuesday, August 13, 2024 Sheet 20 of 32

经纬恒润 JINGWEI HIRAIN

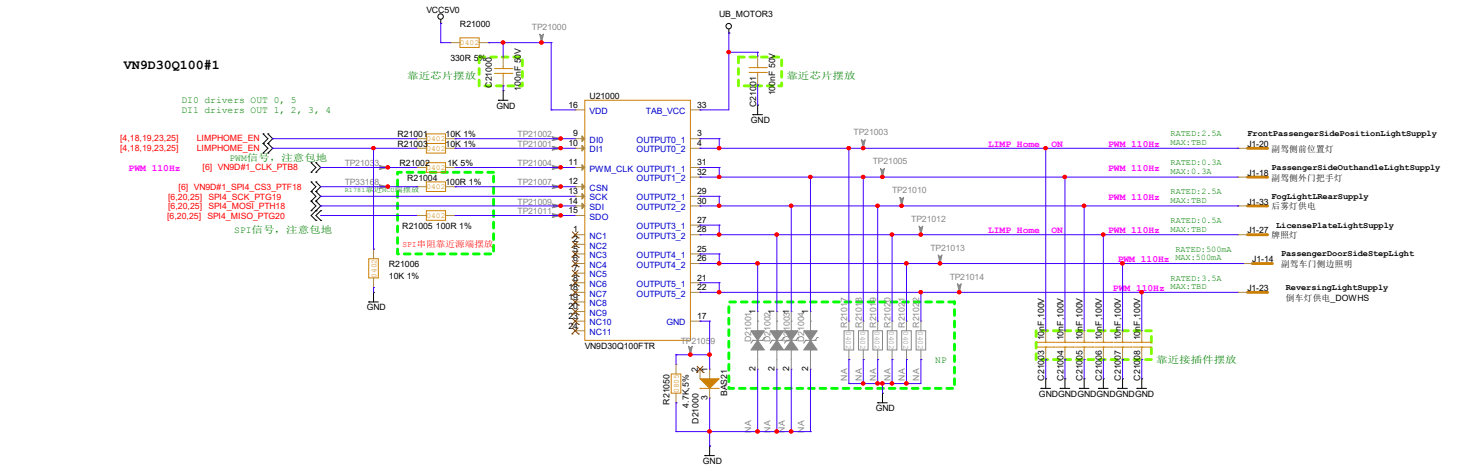

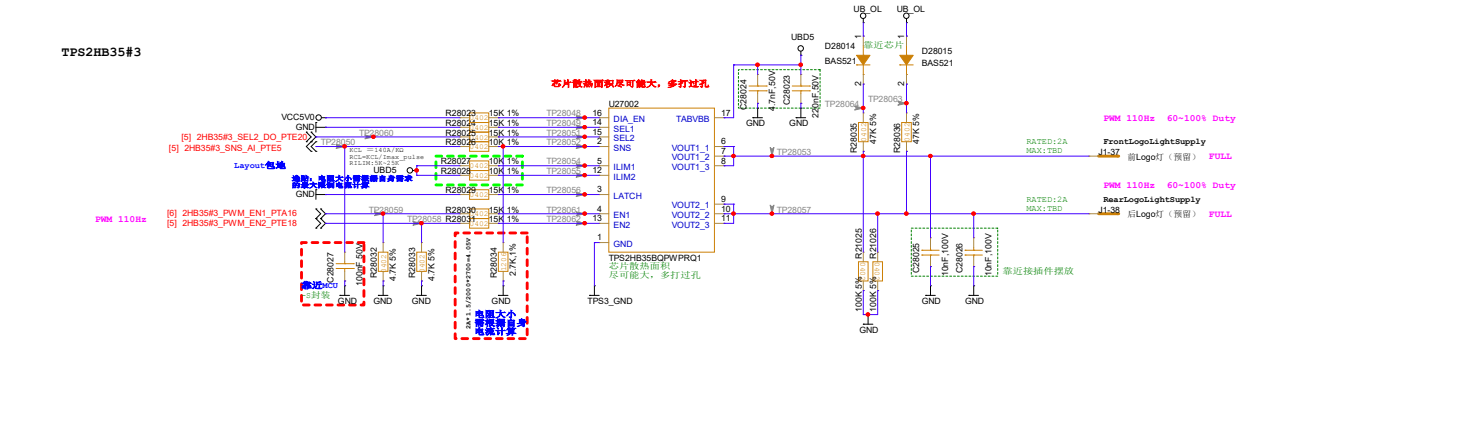

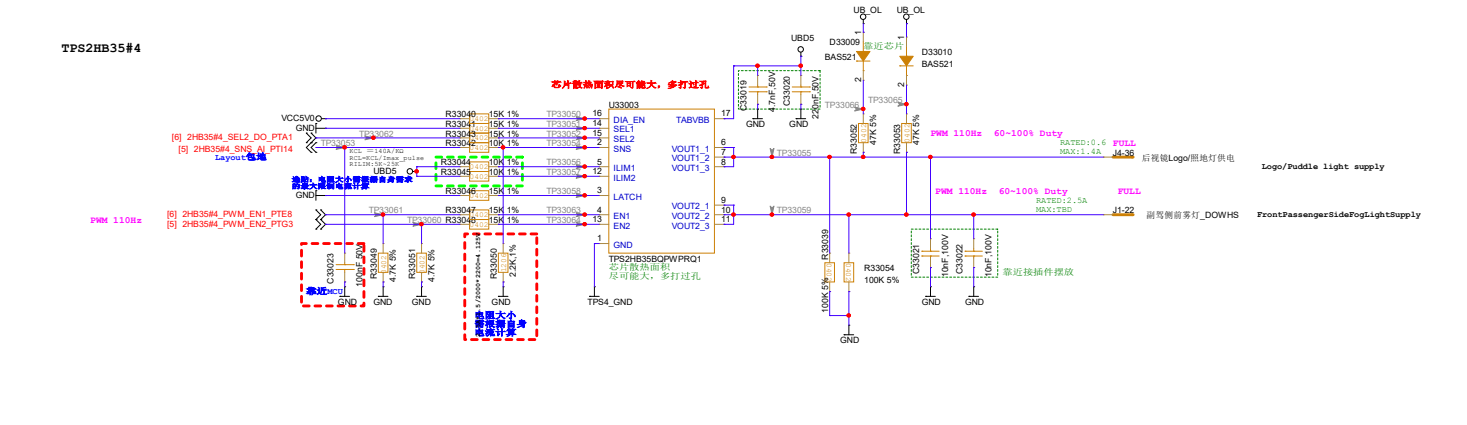

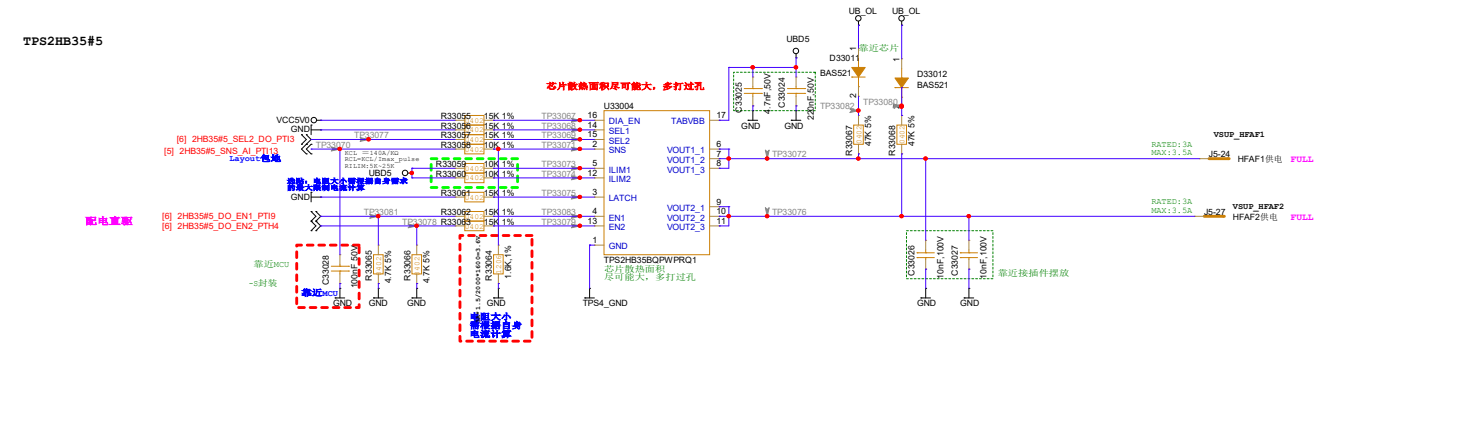

845504438

Design NO.	Rev	Sheet Name
825503205_ZCUP_SCH	V1.3	HS2

Size	Designer / Date	Check / Date	Confirm / Date
Custom	Sen.Li/2024.08.01	Jianwei.Yao/2024.08.01	Qinghua.Diao/2024.08.01
Date: Tuesday, August 13, 2024	Sheet 21 of 32		

经纬恒润 JINGWEI HIRAIN

TPS1HB08#1

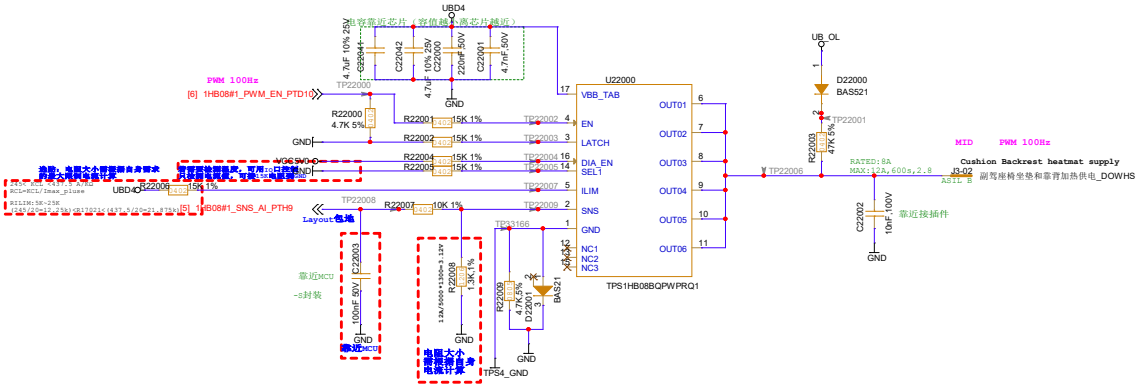

TPS2HB35#2

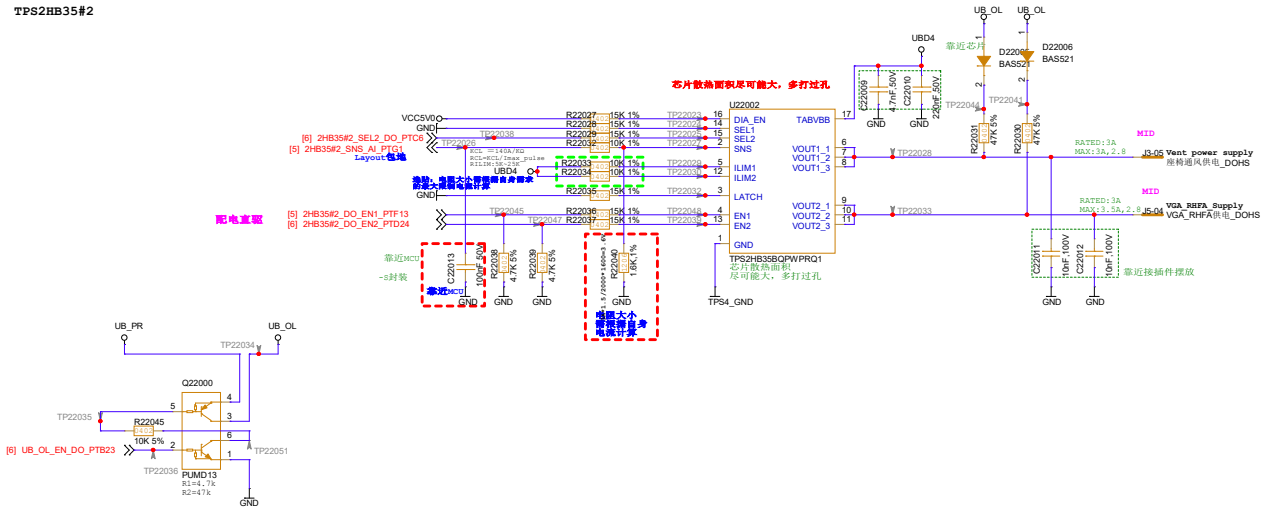

845504438

Design NO.	Rev	Sheet Name
825503205_ZCUP_SCH	V1.3	HS3

Size	Designer / Date	Check / Date	Confirm / Date
Custom	Sen.Li/2024.08.01	Jianwei.Yao/2024.08.01	Qinghua.Diao/2024.08.01
Date: Tuesday, August 13, 2024		Sheet 22 of 32	

经纬恒润 JINGWEI HIRAIN

TPS2HB16#1

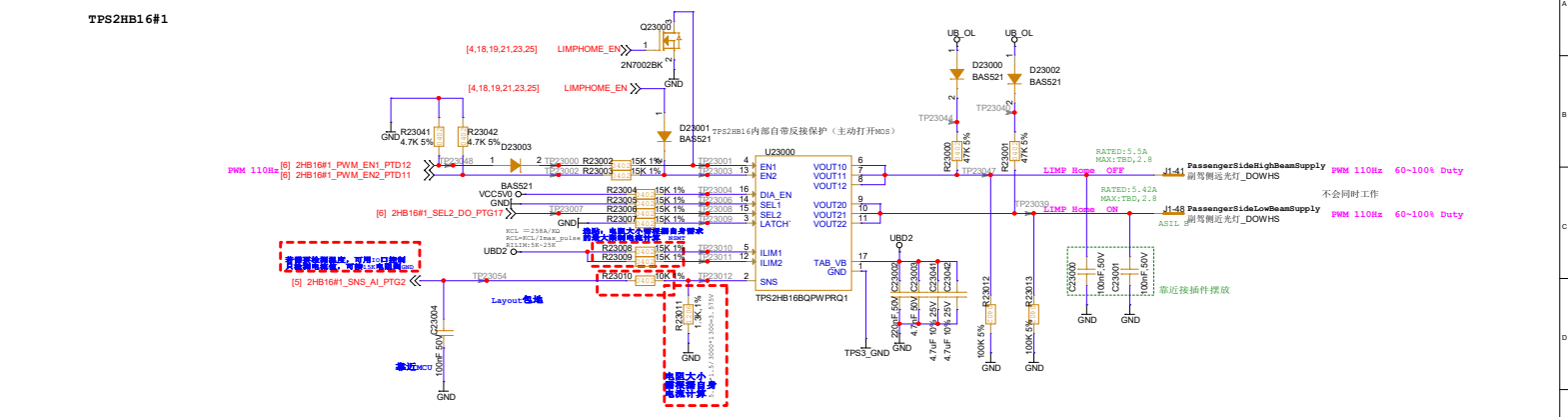

TPS2HB16#2

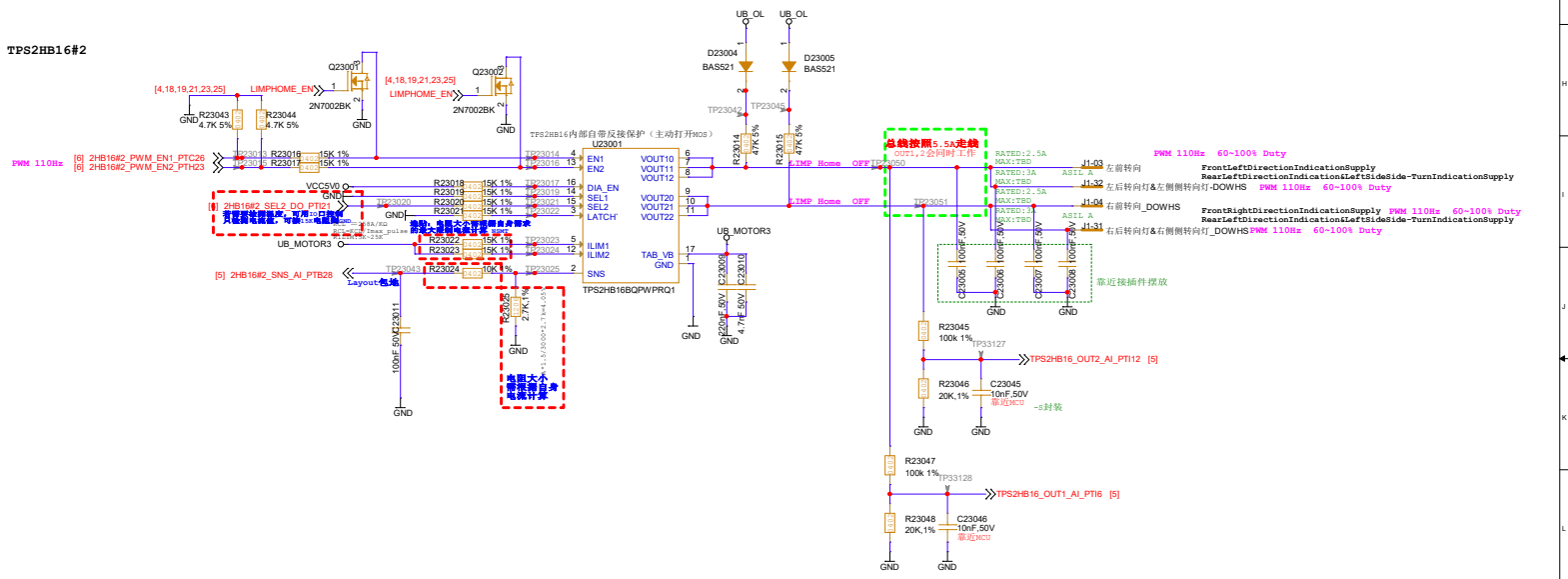

TPS2HB16#3

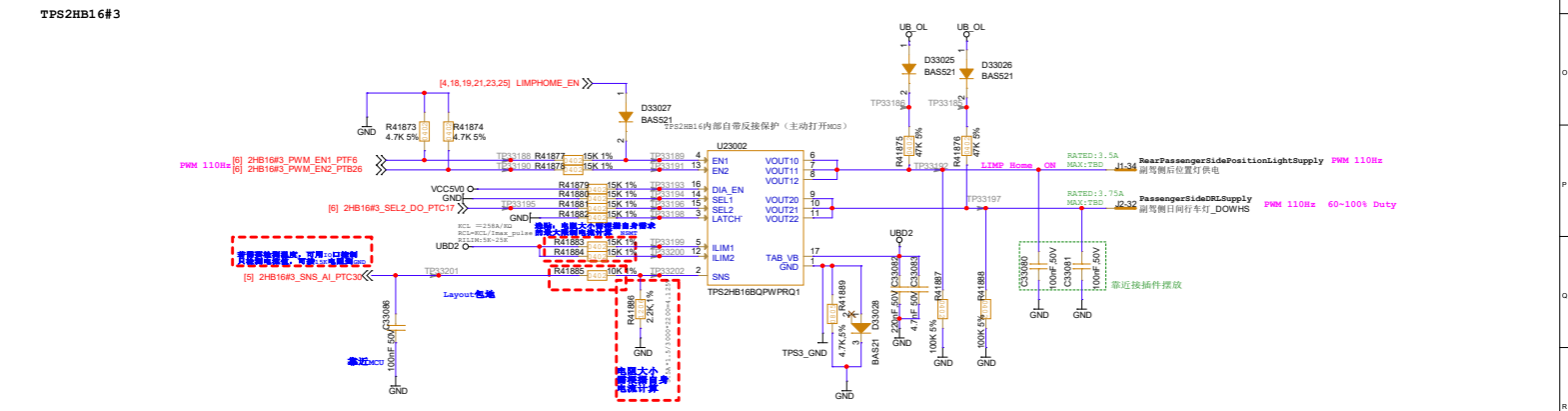

845504438

Design NO.	Rev	Sheet Name
825503205_ZCUP_SCH	V1.3	HS4

Size	Designer / Date	Check / Date	Confirm / Date
Custom	Sen.Li/2024.08.01	Jianwei.Yao/2024.08.01	Qinghua.Diao/2024.08.01

Date: Tuesday, August 13, 2024 Sheet 23 of 32

经纬恒润 JINGWEI HIRAIN

#1

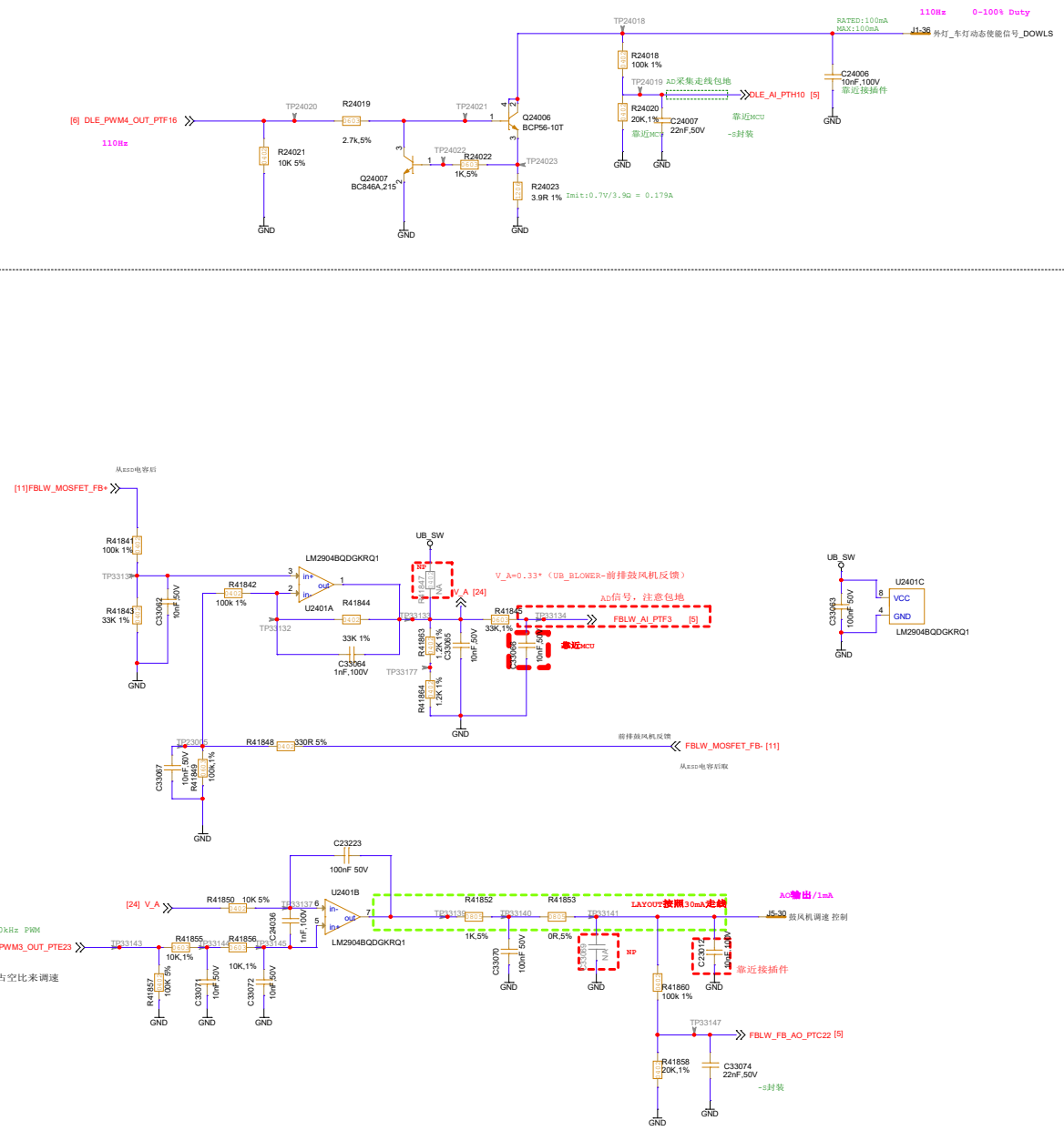

845504438

经纬恒润 JINGWEI HIRAIN

Design NO.	Rev	Sheet Name
825503205_ZCUP_SCH	V1.3	LS1

Size	Designer / Date	Check / Date	Confirm / Date
Custom	Sen.Li/2024.08.01	Jianwei.Yao/2024.08.01	Qinghua.Diao/2024.08.01

Date: Tuesday, August 13, 2024 Sheet 24 of 32

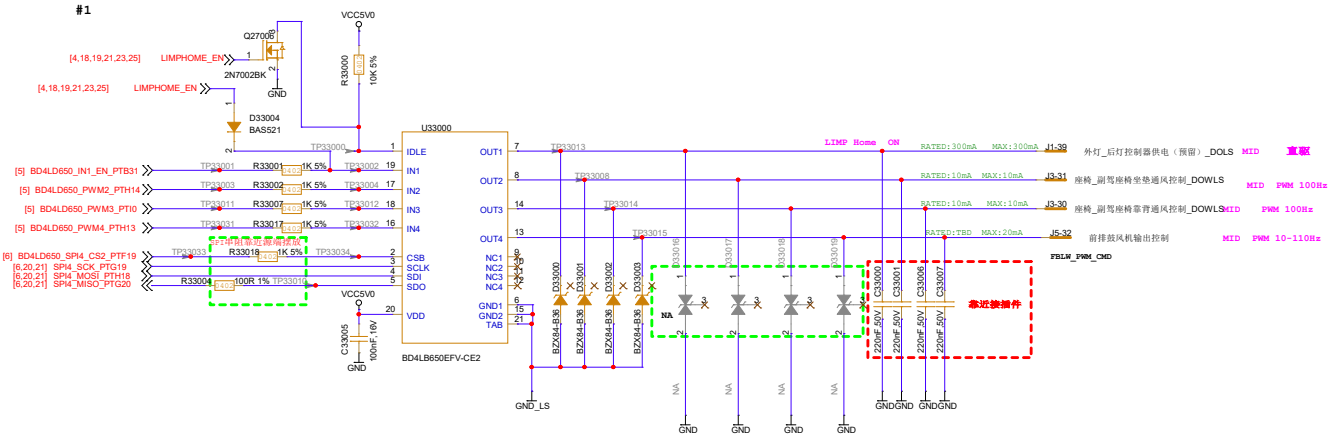

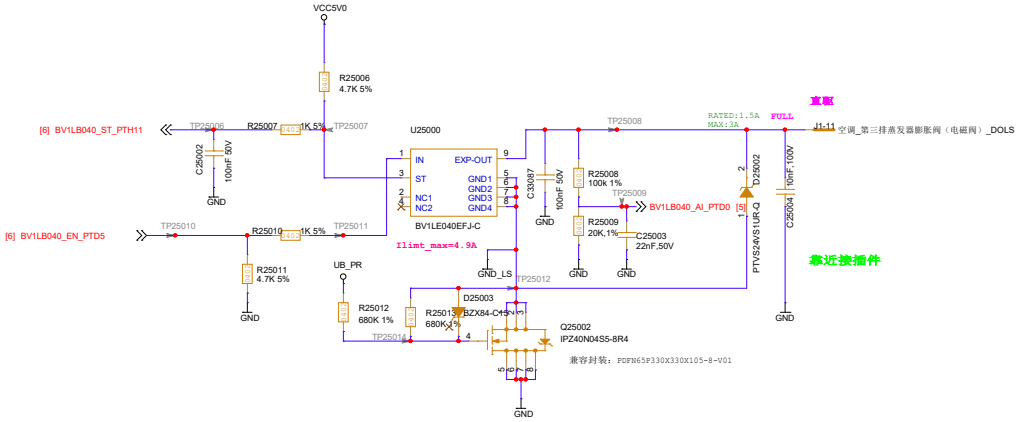

845504438

Design NO.	Rev	Sheet Name
825503205_ZCUP_SCH	V1.3	LS2

Size	Designer / Date	Check / Date	Confirm / Date
Custom	Sen.Li/2024.08.01	Jianwei.Yao/2024.08.01	Qinghua.Diao/2024.08.01

Date: Tuesday, August 13, 2024 Sheet 25 of 32

经纬恒润 JINGWEI HIRAIN

继电器模块短电源需要串30A的保险丝

AllDoorLock+, Unlock-

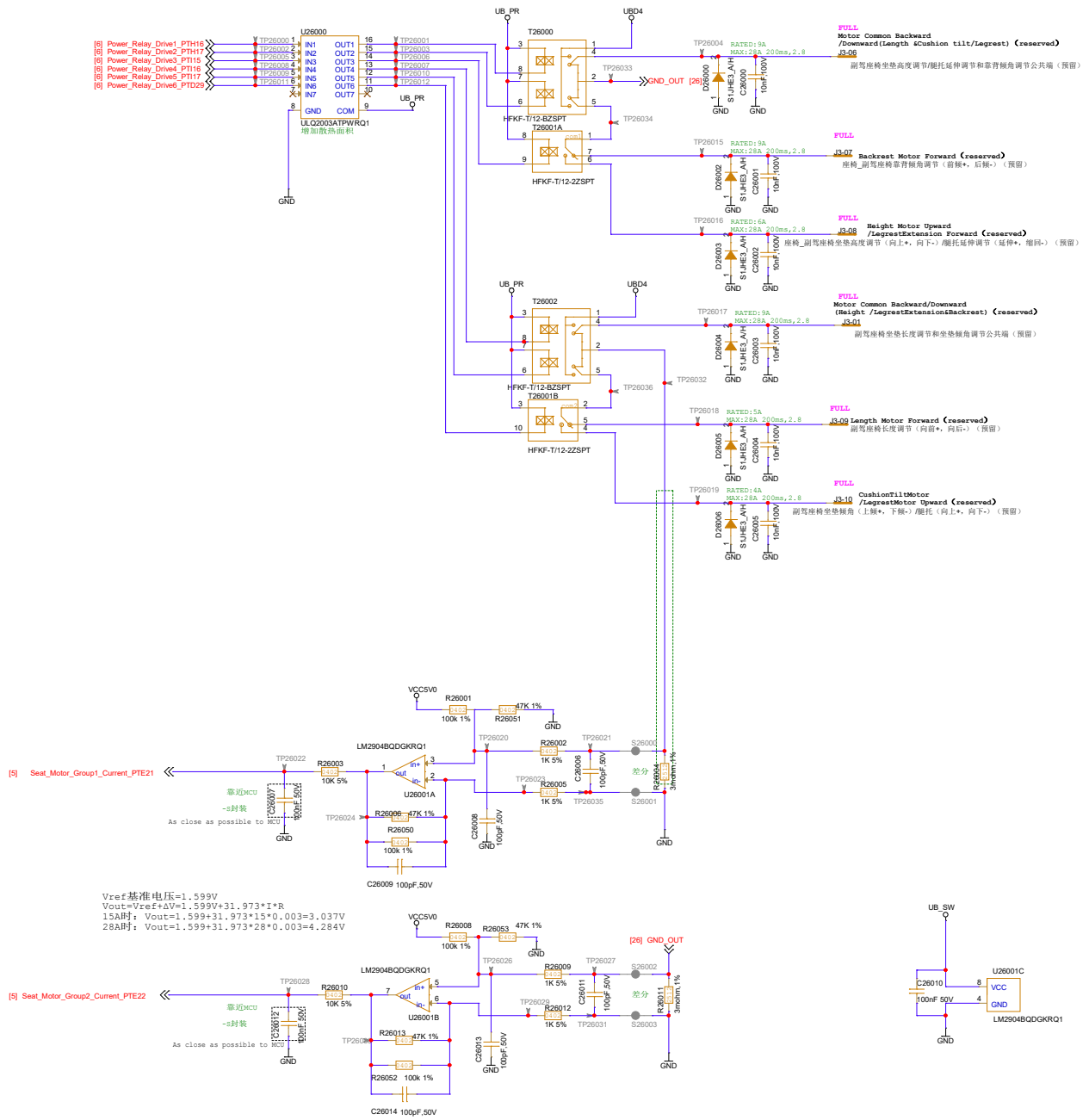

845504438

Design NO.	Rev	Sheet Name
825503205_ZCUP_SCH	V1.3	RELAY

Size	Designer / Date	Check / Date	Confirm / Date
Custom	Sen.Li/2024.08.01	Jianwei.Yao/2024.08.01	Qinghua.Diao/2024.08.01
Date: Tuesday, August 13, 2024		Sheet 26 of 32	

经纬恒润 JINGWEI HIRAIN

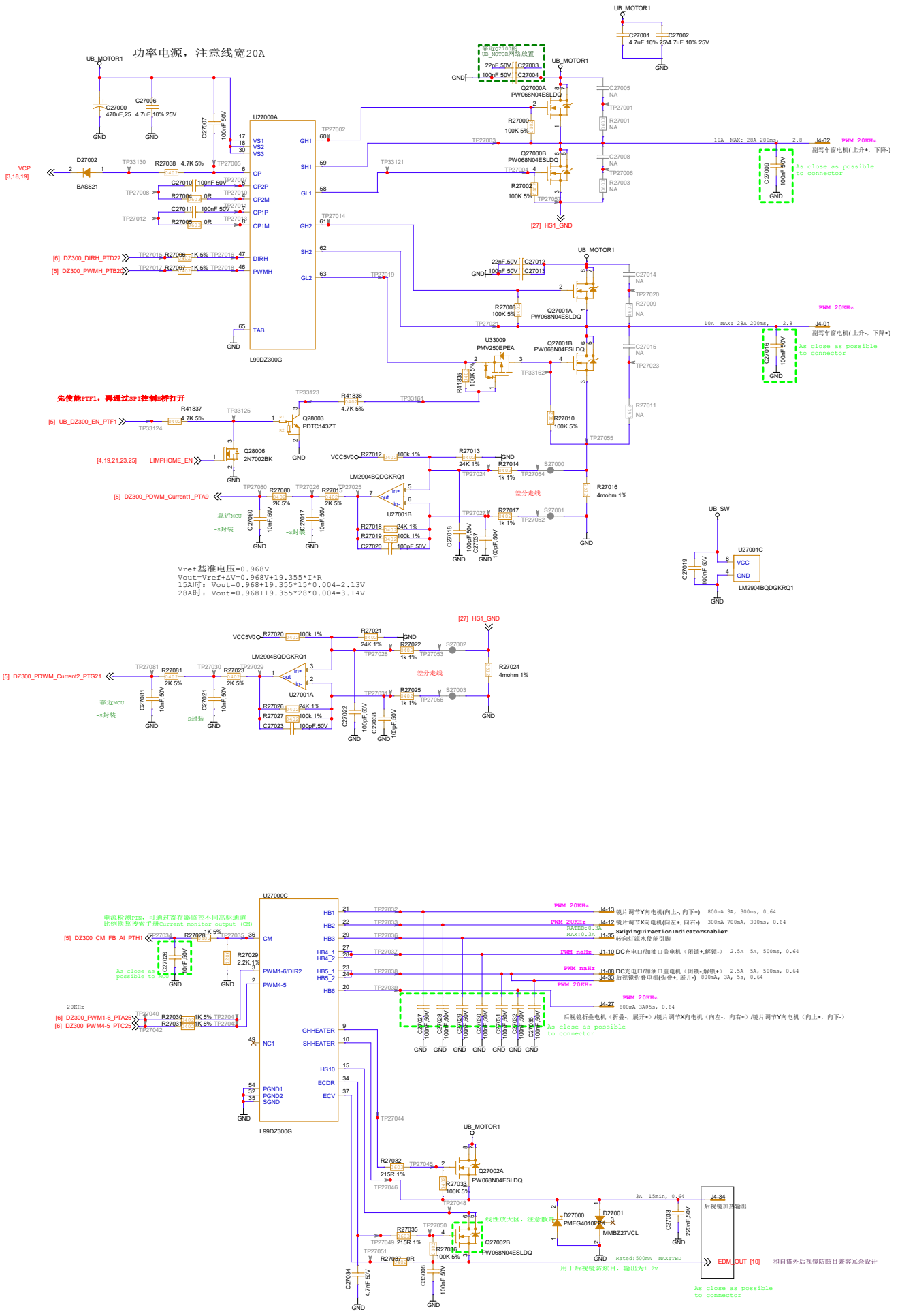

845504438

Design NO.	Rev	Sheet Name
825503205_ZCUP_SCH	V1.3	SBC_01

Size	Designer / Date	Check / Date	Confirm / Date
Custom	Sen.Li/2024.08.01	Jianwei.Yao/2024.08.01	Qinghua.Diao/2024.08.01
Date: Tuesday, August 13, 2024		Sheet 27 of 32	

经纬恒润 JINGWEI HIRAIN

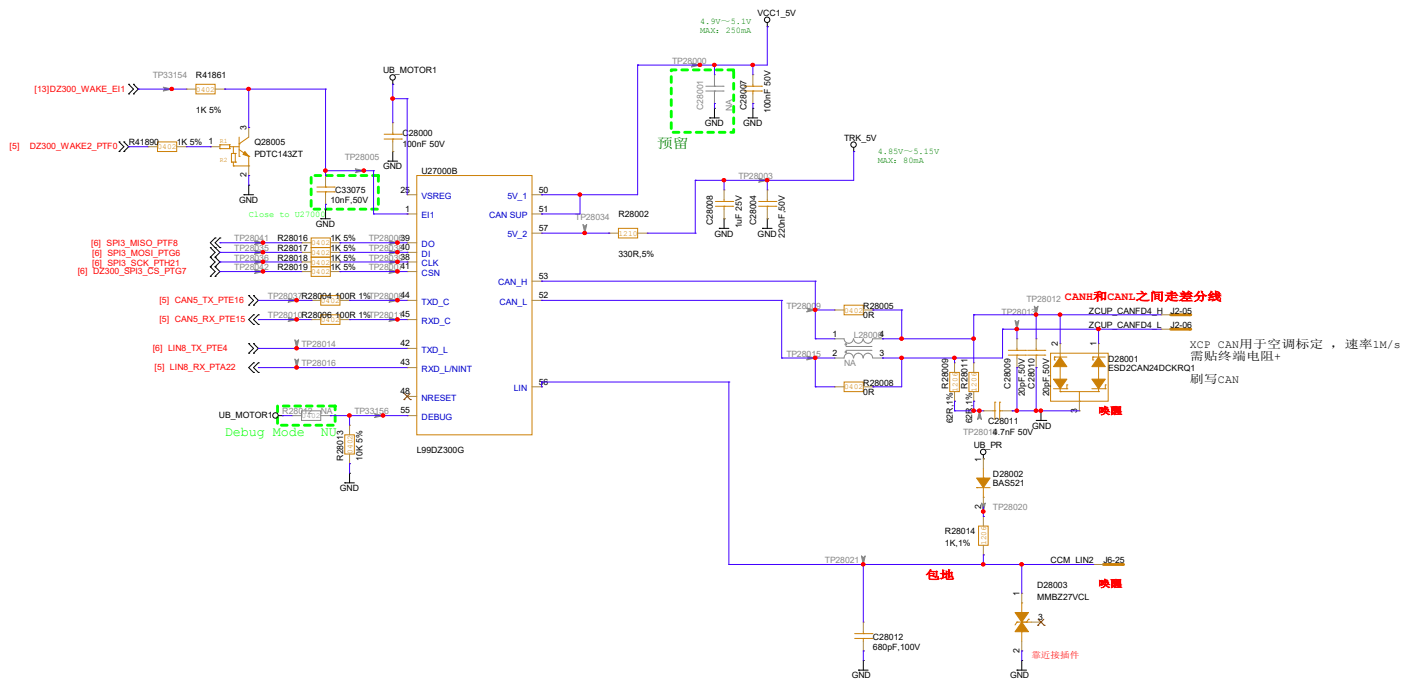

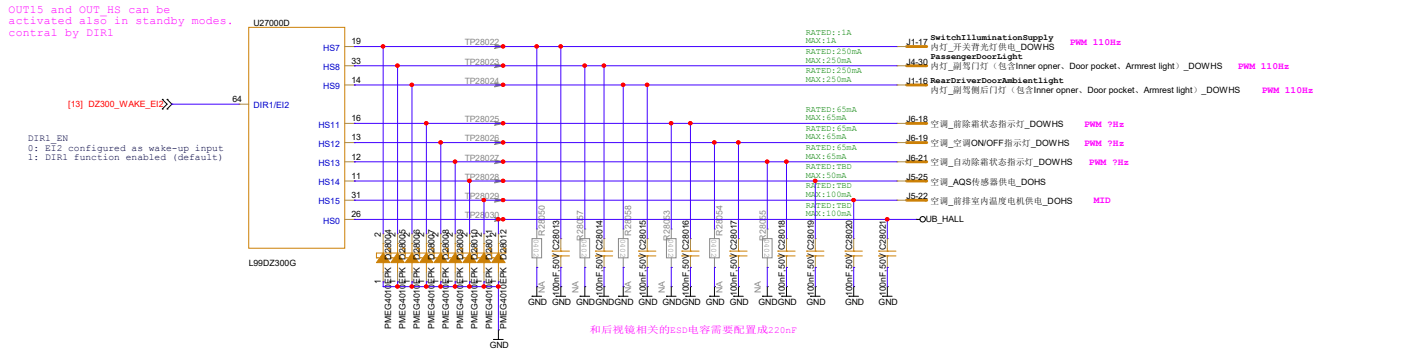

845504438

Design NO.	Rev	Sheet Name
825503205_ZCUP_SCH	V1.3	SBC_02

Size	Designer / Date	Check / Date	Confirm / Date
Custom	Sen.Li/2024.08.01	Jianwei.Yao/2024.08.01	Qinghua.Diao/2024.08.01

Date: Tuesday, August 13, 2024 Sheet 28 of 32

经纬恒润 JINGWEI HIRAIN

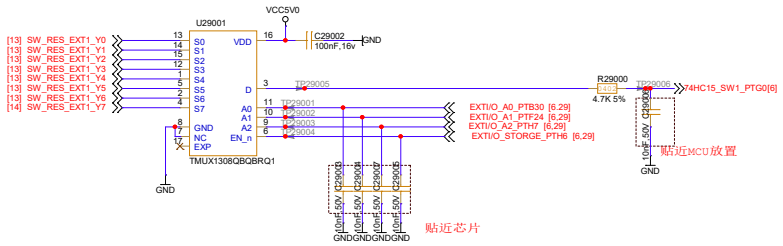

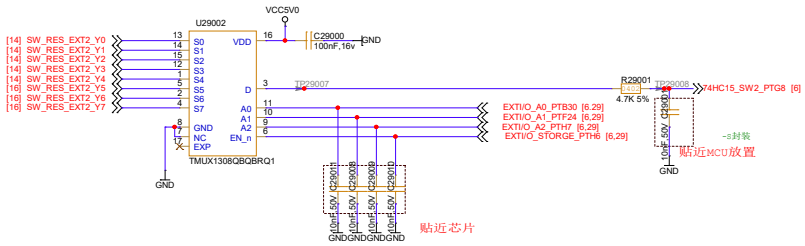

845504438

经纬恒润
JINGWEI HIRAIN

Design NO.	Rev	Sheet Name
825503205_ZCUP_SCH	V1.3	IO_3/8

Size	Designer / Date	Check / Date	Confirm / Date
Custom	Sen.Li/2024.08.01	Jianwei.Yao/2024.08.01	Qinghua.Diao/2024.08.01
Date: Tuesday, August 13, 2024		Sheet 29 of 32	

Revision History:

Date	Author	Description	SCH Version	PCB Version	PCBA Version
2023-10-01	Wenji.Feng	Inital Revision	V1.0A	V1.0	V1000
2023-11-07	kang.yu	1.CAN替换成TPT1043Q，CAN和LIN的唤醒改到U4000的WAKE 2.IGN1唤醒信号改到4000的WAKE 3.7路DIPU唤醒信号接到L99DZ300的EI1/2上	V1.0A	V1.0	V1000
2022-11-08	kang.yu	1.将J1-12修改改成J2-36	V1.0C	V1.0	V1000
2023-11-14	kang.yu	1.将J1-35 转向灯流水使能引脚和J1-14 内灯_副驾车门及副驾侧后门侧边照明分配的驱动资源互换	V1.1A	V1.0	V1000
2023-11-21	kang.yu	1.修改J5-30鼓风机驱动电路	V1.1A	V1.0	V1000
2023-12-11	kang.yu	1.将LIN的上拉有2*2.2K修改成1.0K上拉	V1.1A	V1.0	V1000
2023-12-13	kang.yu	1.将J3-01和J3-06互换位置。	V1.1A	V1.0	V1000
2023-12-22	kang.yu	1.增加C4051,R10030,R10031,R28060-R28055 2.D4006由SMAJ30CAHE3_A/H改成SMBJ30CAHE3_A/H 3.CAN上的负载电容由47pF改成20pF	V1.1A	V1.0	V1000
2024-01-23	sen.li	1.交换LIN3_RX和LIN3_TX接口位置 2.根据系统需求，更新以下接口名称： 1）J3-20改回"副驾座椅坐垫高度调节开关" 2）J2-16改为"后蒸发器温度传感器" 3）ZCUP MID增加二排座椅占位检测功能打点； 增加J2-21空调温度传感器Body共地打点； 4）删除ZCUP LOW J4-7电位计地打点； 5）ZCUP J1-14更名为"副驾车门侧边照明"	V1.2A	V1.1	V1000
2024-04-07	sen.li	1.将2HB16#1采样电阻R23011改为1.3K 将2HB16#2采样电阻R23025改为2.7K 将2HB35#1采样电阻R22025改为1.3K 将2HB35#2采样电阻R22040改为1.6K 将2HB35#3采样电阻R28034改为2.7K 将2HB35#5采样电阻R33064改为1.6K 2.将空调PWM采集电路的下拉电阻R17003和R17005改为100K， 滤波电容C17001和C17003改为1nF 3.CAN和LIN芯片改为同封装TI的料 4. R3009改为20K，0402封装 5. R24019改为2.7K，0603封装 6. 晶振改为40M的物料 7. CAN芯片WAKE引脚改为下拉100K电阻到地 8. SPI0_CS0_PTA11修改成SPI0_CS3_PTA11 8718#2_SPI1_CS1_PTA27修改成 8718#2_SPI1_CS0_PTA27， 8718#3_SPI1_CS0_PTA30修改成 8718#3_SPI1_CS2_PTA30， 只是名字改变，不设计连线和实际功能 9. 将8718#2芯片的副驾侧后门车窗电机（J1-44，J1-43）运放 采集电路输出端改为二级RC滤波 10. 改TP4037为DP点 11. 内外后视镜防眩目限流电阻改为贴两片2.2R (R10000和R10030，R10011和R10031) 12. 内外后视镜防眩目b极串阻R1002和R10001改为0Ω 13. DZ300芯片CM引脚下拉电阻改为2.2K 14. C4022/C4030/C20018/C20003因为物料等级换料 15. D3005/D20000/D20001/D21000/D22001/D22004因为物料等级换料 16. R12044/R17040因为物料等级换料 17. R22003 R22014 R22015 R22030 R22031 R23000 R23001 R23014 R23015 R28035 R28036 R33052 R33053 R33067 R33068更换为47K电阻 18. 更改UB_SW可控电源部分电路，并更换Q3010 19. LDO芯片改为TPS7B8150QDGNRQ1，删除TRK2_5V 20. C4026/C4025/C4019/C4020/C4021/ C4031因为物料等级换料 21. D21001 D21002 D21003 D21004 D25002因为物料等级换料	V1.2A	V1.1	V1000
2024-04-10	sen.li	1.MCU换成B版本	V1.2A	V1.1	V1000
2024-05-13	sen.li	1.DZ300上的车窗驱动增加二级RC滤波 2.修改继电器电流采集计算示例 3.两片8718都增加可控电源电路 4. J4-06和J1-49电释放驱动添加电压采集 5.修改UB_SW可控电源电路，改为PIMC31	V1.2A	V1.1	V1000

845504438

经纬恒润 JINGWEI HIRAIN

Design NO.	Rev	Sheet Name
825503205_ZCUP_SCH	V1.3	REVISION

Size	Designer / Date	Check / Date	Confirm / Date
Custom	Sen.Li/2024.08.01	Jianwei.Yao/2024.08.01	Qinghua.Diao/2024.08.01
Date: Tuesday, August 13, 2024		Sheet 30 of 32	

Revision History:

Date	Author	Description	SCH Version	PCB Version	PCBA Version
2024-05-15	sen.li	1. 增加两片3/8译码器，更改DIPU的IO口分配 2. 增加DZ300芯片EI使能控制电路	V1.2A	V1.1	V1000
2024-05-16	sen.li	1.增加DZ300芯片预驱栅极可控电路（功能安全） 2.增加4片CAN芯片NEER管脚电容 3.更改J5-30鼓风机调速控制的电源由VCC5V改为UB_SW 4.继电器采样电阻由2mR改为3mR 5.物料等级变更，数字采集电路的下拉电阻68K改为56K(DIPU1,2.3，DIPD) 6.DZ300V1_5V输出脚的4.7uF电容改为不贴 7.预留UB_POLLING和UB_SW之间0R电阻位置（0603） 8.自搭LDO电路Q1001漏极1uF电容增大耐压10V到50V	V1.2A	V1.1	V1000
2024-05-20	sen.li	1.删除CAN芯片NSTB和EN引脚的下拉电阻以及NERR引脚电容（只保留第一片） 2.更新DEBUG页描述，增加烧写头的DP点和点火信号的DP点 3.AI12V和AI5V的47K串阻5%改为1%	V1.2A	V1.1	V1000
2024-05-22	sen.li	物料评审变更： 1.CAN芯片改为降本版本的TI的1043A的料 2. C28008改为801201190 3.C7008换成GCM的 802610529 4.C7029 C7042 C10000 C10008 C20003 C20018 改为802610772	V1.2A	V1.1	V1000
2024-05-23	sen.li	1.更改电阻R4019/R4020/R4021阻值，新增电阻R4027 2.J6-12的上拉电阻改为100K和10K并联 3.UBD3添加电源防反 4.J1-34和J1-23互换位置 5.增加DZ300的电荷泵端口和8718的电荷泵并到电源防反电路 6.增加左右转向灯独立电压采集电路	V1.2A	V1.1	V1000
2024-05-24	sen.li	1.燃油泵上拉电阻改为698R和1K并联（0603） 2.更改VN9D/8908#1/TPS2HB16#2电源网络改为MOTOR3, 3.去掉8908#1电源处防反二极管以及TPS2HB16#2电源引脚4.7uF电容 4. SPI的串阻33R全部换成100R	V1.2A	V1.1	V1000
2024-05-28	sen.li	1.根据最新的远端ESD需求，更改J6-15/J6-16/J6-17/J1-13/J3-18/J3-19/J3-20/J3-21/J3-24/J3-23/J3-26/J3-27/J3-28/J4-31/J4-32/J2-25/J2-26接插件ESD电容为100nF 2. 两个内外防眩目，8718车窗，DZ300车窗，继电器的电流回踩电路的运放改为872001293 3.POLLING的上拉电阻全部改为0805的高功率电阻，目前阻值2.2K	V1.2A	V1.1	V1000
2024-05-29	sen.li	1.电流HALL上拉电阻改为270R 2.MCU芯片PORT口调整： 1).9D30Q100的CLK需要单独的一路FTU,改为FTU4 2).需要挪出一路单独的FTU给GPT用，留下FTU5给软件使用 3).HS PAD不能用在SPI上：SPI2改成SPI4 4).ADC通道上电机类的要放在一起 5).抖频的驱动需要FTU分组放在一起：系统输入车窗电机不参与抖频，所以要单独抽出来换到FTU1	V1.2A	V1.1	V1000
2024-05-30	sen.li	1.整体更新J5-30鼓风机调速自搭电路，整体变更 2. 棘爪开关唤醒电路栅极上拉电阻R13042/R13051由100K改为43K，充电电容C13018/C13016由100nF改为220nF	V1.2A	V1.1	V1000
2024-06-04	sen.li	1.C33056,C29001,C28027,C33074,C10015,C3018,C23045,C8028电容封装需要换成-S的封装 2.SPI2通信端口改为SPI4（片选通道也对应更改，PORT之前已更改，只改名字） 3..删除TP11026	V1.2A	V1.1	V1000
2024-06-11	sen.li	1.PMIC的CS引脚加上拉R2041及上拉源 2.PMIC的WAKE脚RC更改，共用后级RC，删除前级限流电阻。 3.删除8718#3的可控电源回采PTG22端口改为PMIC芯片的WAKE脚回采。 4.增加DZ300芯片EI1引脚的RC滤波 5.删除数字采集电路中的下拉电阻 6.修改5-30鼓风机调速电路 7.物料变更，更改3/8译码器的芯片。 8.C18058/C33074和C10015改为-S封装 9.PTB31和PTC31交换端口 10.物料变更，原物料降级，Q25002改为兼容封装PDFN65P330X330X105-8 11.R28002改到DZ300芯片V2_5V引脚处 12.物料变更，TVS管D8000/D8001/D8002/D8003/D28001改为ESD2CANFD24DBZRQ1 13.J2-21,J4-07,J4-23视图（高中低配）改变 14. MOTOR1增加470uF电解电容C33079 15.四通道低驱芯片输出脚更换为TVSD33016/D33017/D33018/D33019	V1.2A	V1.1	V1000
2024-07-20	sen.li	1.燃油泵液位采集上拉源由TRK_FUEL改为VCC5V0_SW，温度传感器上拉源改为VCC5V0_SW，删除TRK_FUEL可控电源模块 2.后视镜位置采集上拉源由Sensor_5V改为TRK_5V，删除Sensor_5V可控电源模块 3.C28008改为0603的1uF电容，C28004耐压值改为50V 4.R28052改为47K 1%电阻 5.C27016，C27009，C28002改为100nF，C23223改为村田的料封装变成0402 6.PTE13和PTA13互换，PTD24和PTE24互换PORT 7.在2HB35#1的EN1的串阻后接二极管接LIMPHOME 8.DI采集电路中存在防反二极管的采集端改为MCU采集，和译码器互换PORT 9.R41839和R41840电阻改为280R 1% 10.更换单通道低驱芯片输出脚TVS二极管D25002，并在输出脚加1uF电容C33087 11.R41860改为100K，R41858改为20K 12.J1-34和J2-32驱动改为TPS2HB16芯片驱动 13.R12044改为47K，1% 14.燃油泵液位采集电路采集端电容改为1nF	V1.3A	V1.2	V1000

845504438

经纬恒润 JINGWEI HIRAIN

Design NO.	Rev	Sheet Name
825503205_ZCUP_SCH	V1.3	REVISION

Size	Designer / Date	Check / Date	Confirm / Date
Custom	Sen.Li/2024.08.01	Jianwei.Yao/2024.08.01	Qinghua.Diao/2024.08.01

Date: Tuesday, August 13, 2024 Sheet 31 of 32

Revision History:

Date	Author	Description	SCH Version	PCB Version	PCBA Version
2024-07-31	sen.li	1. 更改DZ300的EI脚外围电路 2.JMSL0406AGDQ捷捷微MOS改平伟PW068N04ESLDQ IAUC100NO4S6N015英飞凌改平伟PWCO13N04ESQ IAUC80NO4S6N036英飞凌改平伟PWCO28N04ESQ 3.VN9D芯片后雾灯和前位置灯互换位置	V1.3A	V1.2	V1000

845504438

经纬恒润 JINGWEI HIRAIN

Design NO.	Rev	Sheet Name
825503205_ZCUP_SCH	V1.3	REVISION

Size	Designer / Date	Check / Date	Confirm / Date
Custom	Sen.Li/2024.08.01	Jianwei.Yao/2024.08.01	Qinghua.Diao/2024.08.01

Date: Tuesday, August 13, 2024 Sheet 32 of 32