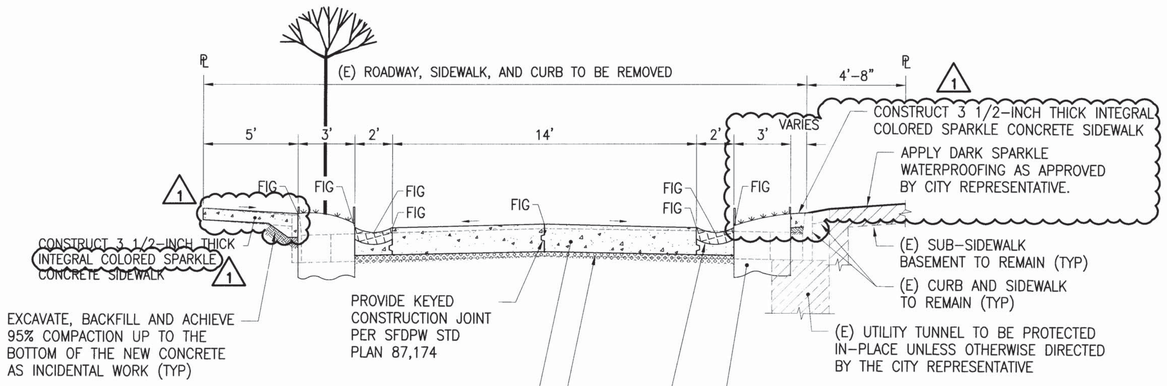

SECTION V
NATOMA STREET
NOT TO SCALE
R-2A

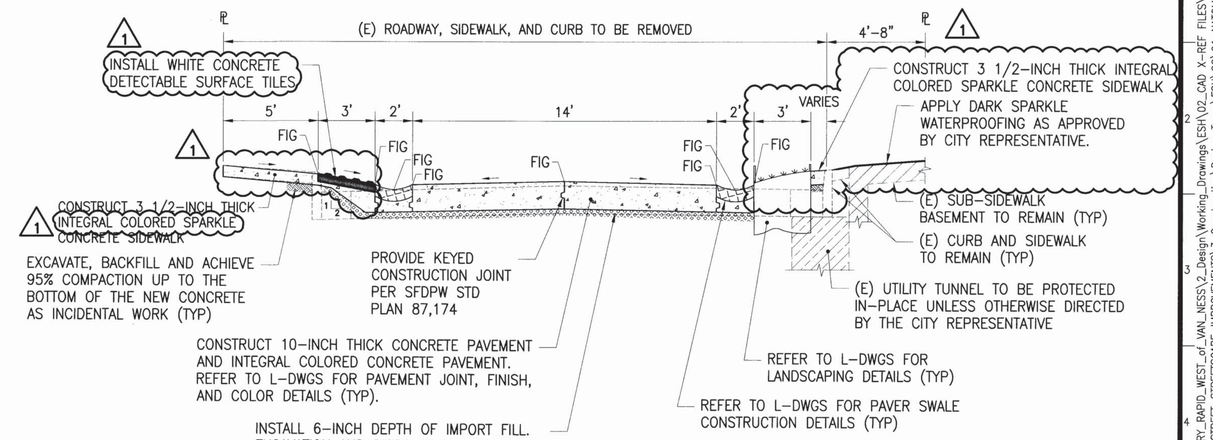

SECTION W
NATOMA STREET
NOT TO SCALE
R-2A

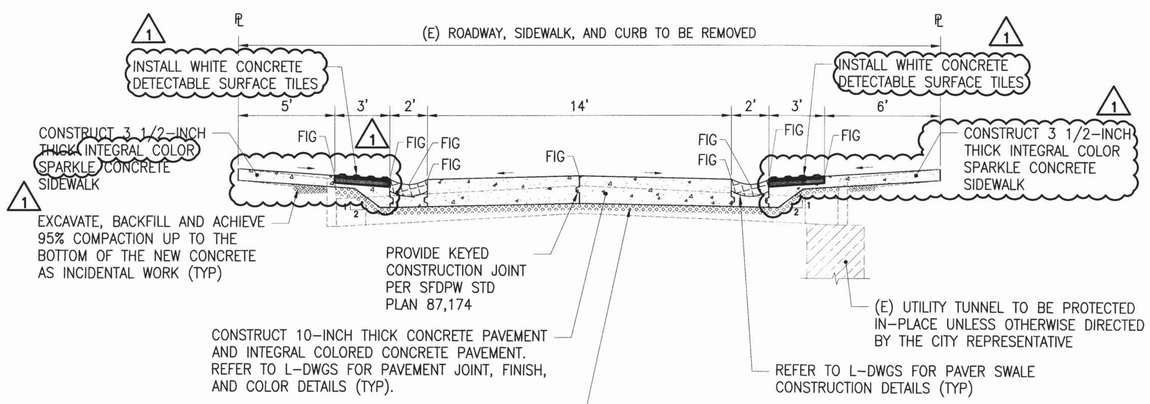

SECTION X
NATOMA STREET
NOT TO SCALE
R-2A

NO.	DATE	DESCRIPTION	BY	APP.
1	08/18	ADD DOMES & REVISE SWLK MATERIAL	YL	KC

TABLE OF REVISIONS
THIS DRAWING WAS LAST MODIFIED: 09/12/18 09:22, BY: kcchang

REFERENCE INFORMATION & FILE NO. OF SURVEYS

SEAL OF THE CITY AND COUNTY OF SAN FRANCISCO

SAN FRANCISCO PUBLIC WORKS

BUREAU OF DESIGN & ENGINEERING
PUBLIC WORKS
CITY & COUNTY OF SAN FRANCISCO
30 VAN NESS AVENUE, 5TH FLOOR
SAN FRANCISCO, CA 94102 - 6028

		Date:
Acting Section Mgr:	ERIC KJELSBERG	9/14/18
Deputy Division Mgr:	FERNANDO CISNEROS	9/17/18
Division Mgr:	PATRICK RIVERA	9/17/18

DESIGNED:	K.CHANG	DATE: 09/18
DRAWN:	K.CHANG	DATE: 09/18
CHECKED:	D.CALLEROS	DATE: 09/18

REGISTERED PROFESSIONAL ENGINEER
KIMBERLY C. CHANG
No. C83180
CIVIL
STATE OF CALIFORNIA
11/14/18

SCALE: N.T.S.
SHEET OF SHEETS

SECOND STREET IMPROVEMENT PROJECT
NATOMA STREET TYPICAL SECTION VII

EHY JO NO. 2835J
CONTRACT NO. 1064J (R)
DRAWING NO. R-11A
FILE NO. 106,334.1
REV. NO. 1

Drawing Path: V:\1064J_SECOND_STREET_STREETSCAPE_IMPROVEMENTS\2_Design\Working_Drawings\Transbay- NatomaStreet_extension-SECTIONS.dwg, Xrefs: VAGRIDS, GEARY_RAPID_WEST_of_VAN_NESS\2_Design\Working_Drawings\ESH\02_CAD X-REF FILES\XTB_2608J.dwg V:\1064J_SECOND_STREET_STREETSCAPE_IMPROVEMENTS\3_Construction\Design_Team\ESH\CO\01_NATOMA_EXTENSION\dwgs\DE1_TBD_n V:\1064J_SECOND_STREET_STREETSCAPE_IMPROVEMENTS\Official_Project_TBs\DE1_TBD_ESH-rebid.dwg
Plot Time: Thu, 13 Sep 2018 - 6:47am
Model Units: Feet
Measurement Units are English