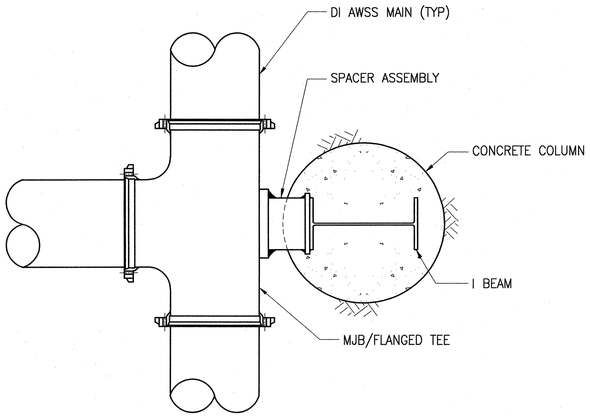

PLAN – DUCTILE IRON TEE

NOTES (PLAN VIEW):

1. STOP COLLARS, TIE RODS, NUTS, WASHERS, COLLAR STOPS NOT SHOWN. REFER TO NEW WORK DWGS FOR REQUIREMENTS.
2. REFER TO "TABLE OF DIMENSIONS" ON THIS SHEET FOR SPACER ASSEMBLY DIAMETER, I BEAM SIZE AND LENGTH, AND CONCRETE COLUMN DIAMETER.

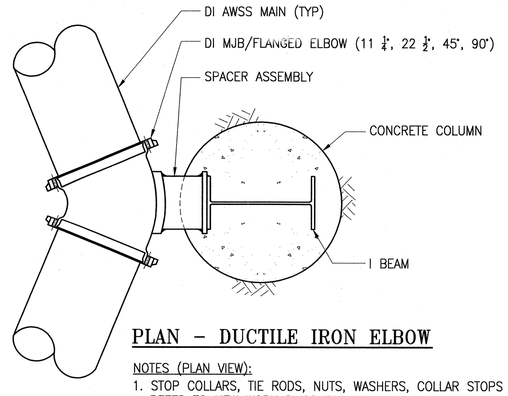

PLAN – DUCTILE IRON ELBOW

NOTES (PLAN VIEW):

1. STOP COLLARS, TIE RODS, NUTS, WASHERS, COLLAR STOPS NOT SHOWN. REFER TO NEW WORK DWGS FOR REQUIREMENTS.
2. REFER TO "TABLE OF DIMENSIONS" ON THIS SHEET FOR SPACER ASSEMBLY DIAMETER, I BEAM SIZE AND LENGTH, AND CONCRETE COLUMN DIAMETER.

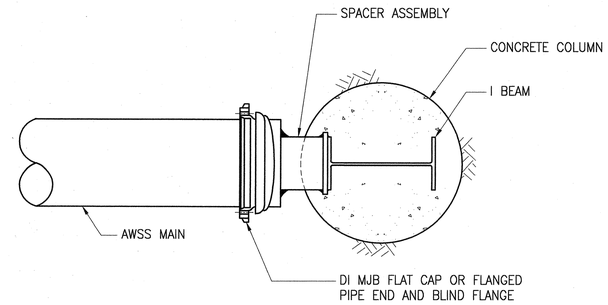

PLAN – DUCTILE IRON FLAT CAP/BLIND FLANGE

NOTES (PLAN VIEW):

1. STOP COLLARS, TIE RODS, NUTS, WASHERS, COLLAR STOPS NOT SHOWN. REFER TO NEW WORK DWGS FOR REQUIREMENTS.
2. REFER TO "TABLE OF DIMENSIONS" ON THIS SHEET FOR SPACER ASSEMBLY DIAMETER, I BEAM SIZE AND LENGTH, AND CONCRETE COLUMN DIAMETER.

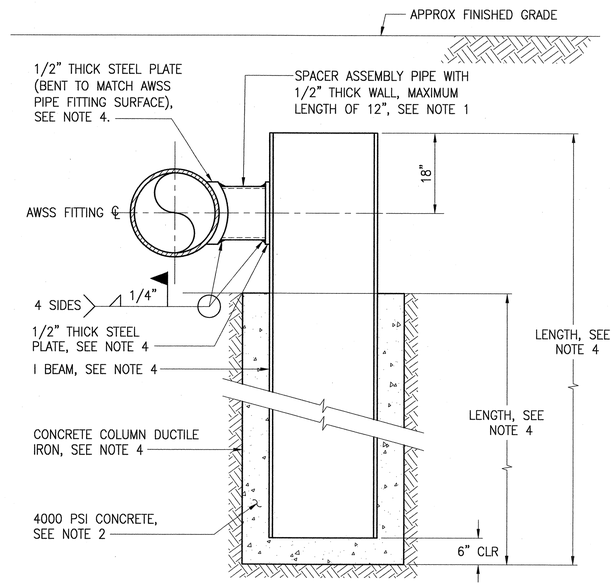

ELEVATION

CONCRETE/STEEL THRUST POST DETAIL

SCALE: NONE

NOTES:

1. STEEL SPACER ASSEMBLY PIPE END SHALL BE CUT TO MATCH BENT STEEL PLATE. REFER TO "TABLE OF DIMENSIONS" FOR DIAMETER.
2. FILL ENTIRE VOID BETWEEN I BEAM AND DRILLED SHAFT WITH CONCRETE, VIBRATE TO ENSURE NO VOIDS REMAIN.
3. I BEAM SHALL BE CENTERED IN DRILLED SHAFT.
4. REFER TO "TABLE OF DIMENSIONS" ON THIS SHEET FOR STEEL PLATE SIZE, I BEAM SIZE AND LENGTH AND CONCRETE SHAFT DIAMETER AND DEPTH.
5. REFER TO NEW WORK PLAN/PROFILE DRAWINGS FOR DEPTH OF AWSS PIPE FROM FINISHED GARDE.

TABLE OF DIMENSIONS

AWSS PIPE SIZE (INCHES)	SPACER ASSEMBLY DIA. (INCHES)	STEEL PLATE (INCHES)	I BEAM	I BEAM LENGTH (FEET)	CONCRETE COLUMN DIA. (INCHES)
8–12	8	12 X 12	W12 X 72	20	30
14–16	10	14 X 14	W16 X 88	26	32
18–20	12	18 X 18	W24 X 100	33	36

NO.	DATE	DESCRIPTION	BY	APP.

TABLE OF REVISIONS
CHECK WITH TRACING TO SEE IF YOU HAVE LATEST REVISION

REFERENCE INFORMATION & FILE NO. OF SURVEYS

BUREAU OF ENGINEERING
DEPARTMENT OF PUBLIC WORKS
CITY AND COUNTY OF SAN FRANCISCO

DESIGNED: DATE:
DRAWN: NL DATE: 11/10
CHECKED: MBS DATE: 11/10

APPROVED
SECTION MANAGER DATE:
DEPUTY BUREAU MANAGER DATE:
BUREAU MANAGER DATE:

SCALE: NONE
SHEET OF SHEETS 7 OF 10

CITY AND COUNTY OF SAN FRANCISCO
AUXILIARY WATER SUPPLY SYSTEM
AWSS STANDARD DRAWING VII

SPECIFICATION NO.
DRAWING NO. AWSS 7
FILE NO.
REV. NO. 0

Drawing Path: S:\MFC\AWSS\AWSS STANDARD DRAWINGS\AutoCad Set of ten Standard Drawings\AWSS-ST-DWG-VII.dwg Dimensions Scale: 1
Xrefs: S:\MFC\AWSS\AWSS STANDARD DRAWINGS\BOF Title Block.dwg