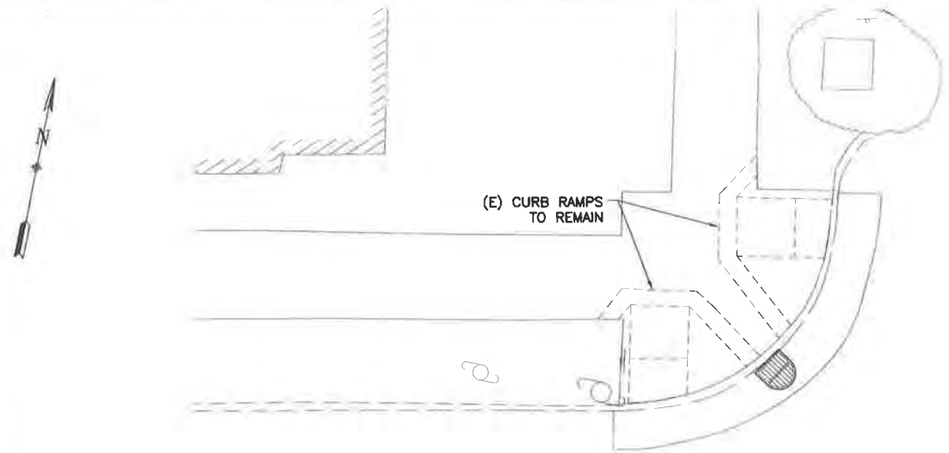

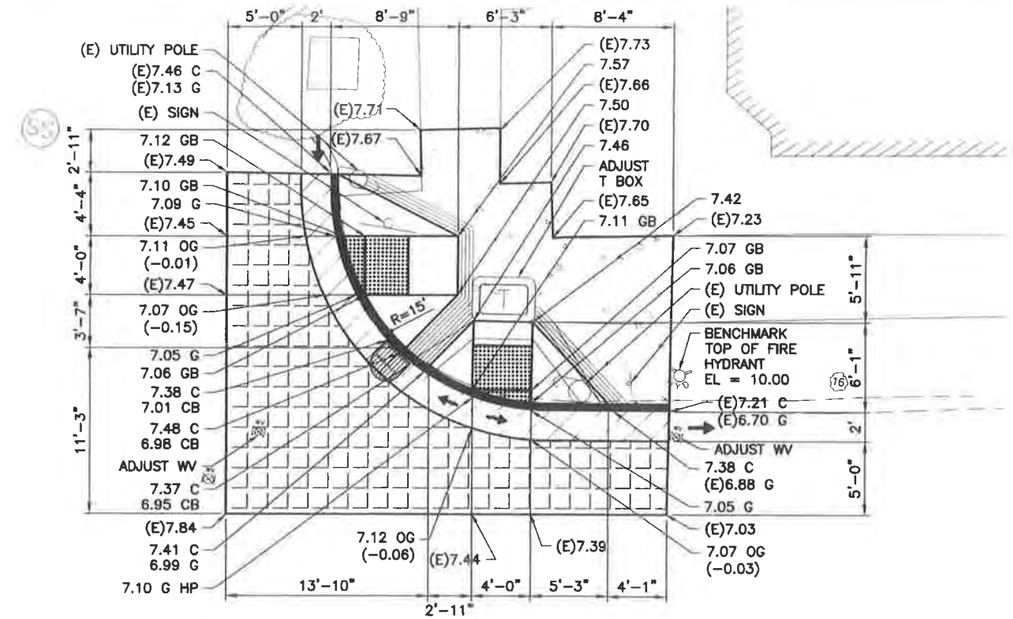

CALIFORNIA ST.

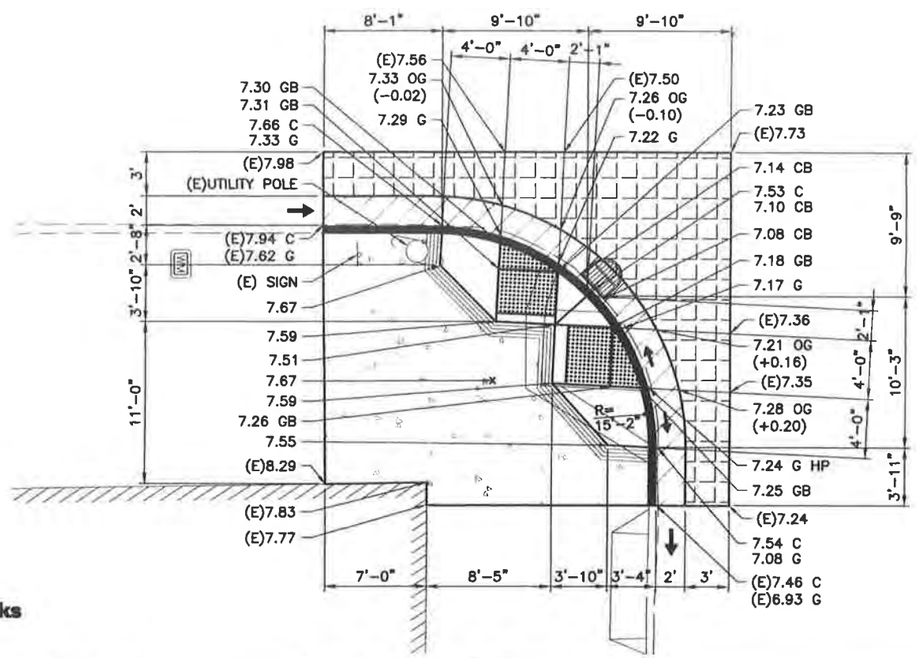

30TH AVE.

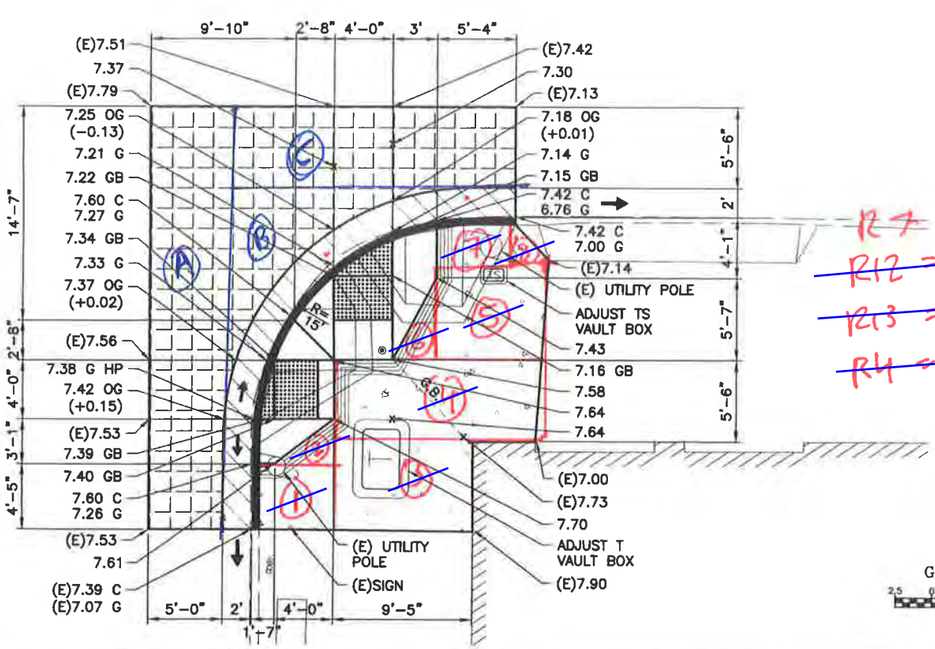

R7 = 266 SF
~~R12 = 188.25 SF~~
~~R13 = 2 EA~~
~~R14 = 34 LF~~

GRAPHIC SCALE
2.5 0 2.5 5 10
(IN FEET)
1 INCH = 5 FEET

Kennedy/Jenks
Consultants

NO.	DATE	DESCRIPTION	BY	APP.

TABLE OF REVISIONS
THIS DRAWING WAS LAST MODIFIED: 03/14/18 12:31, BY: royceo

REFERENCE INFORMATION & FILE NO. OF SURVEYS

SEAL OF THE CITY AND COUNTY OF SAN FRANCISCO

PUBLIC WORKS
DESIGN & ENGINEERING
CITY & COUNTY OF SAN FRANCISCO
SAN FRANCISCO PUBLIC WORKS
30 VAN NESS AVENUE, 5TH FLOOR
SAN FRANCISCO, CA 94102 - 6028

		Date:
Section Mgr:	Eric T. Kilberg	5/16/18
Deputy Division Mgr:		5/16/18
Division Mgr:		5/16/18

DESIGNED:	JLB	DATE:	8/1/16
DRAWN:	ROO	DATE:	8/2/16
CHECKED:	FCN	DATE:	12/7/16

REGISTERED PROFESSIONAL ENGINEER
REYNALDO C. ARCEO
No. C67670
Exp. 12/30/18
CIVIL
STATE OF CALIFORNIA
3-14-18

SCALE: 1"=5'

SHEET OF SHEETS: 45 OF 89

VARIOUS LOCATIONS PAVEMENT RENOVATION NO. 37 AND SEWER REPLACEMENT

CALIFORNIA STREET AND 30TH AVENUE CURB RAMP DETAILS

EHY JO NO. 2963J

CONTRACT NO. 2792J
DRAWING NO. CR-21
FILE NO. 109,983
REV. NO.

Drawing Path: N:\2015\1568001.17 - Curb Ramps 2796J Various No. 31\1568001.17_CR2 as new CR21 in V\L37.dwg
Plot Time: Wed, 14 Mar 2018 - 12:36pm
Model Units: Undefined
Measurement Units are English

Xrefs: X-TOPO-California & 30th.dwg
N:\2015\1568001.17 - Curb Ramps 2796J Various No 31\DE1_TB_22x34_2792J.dwg