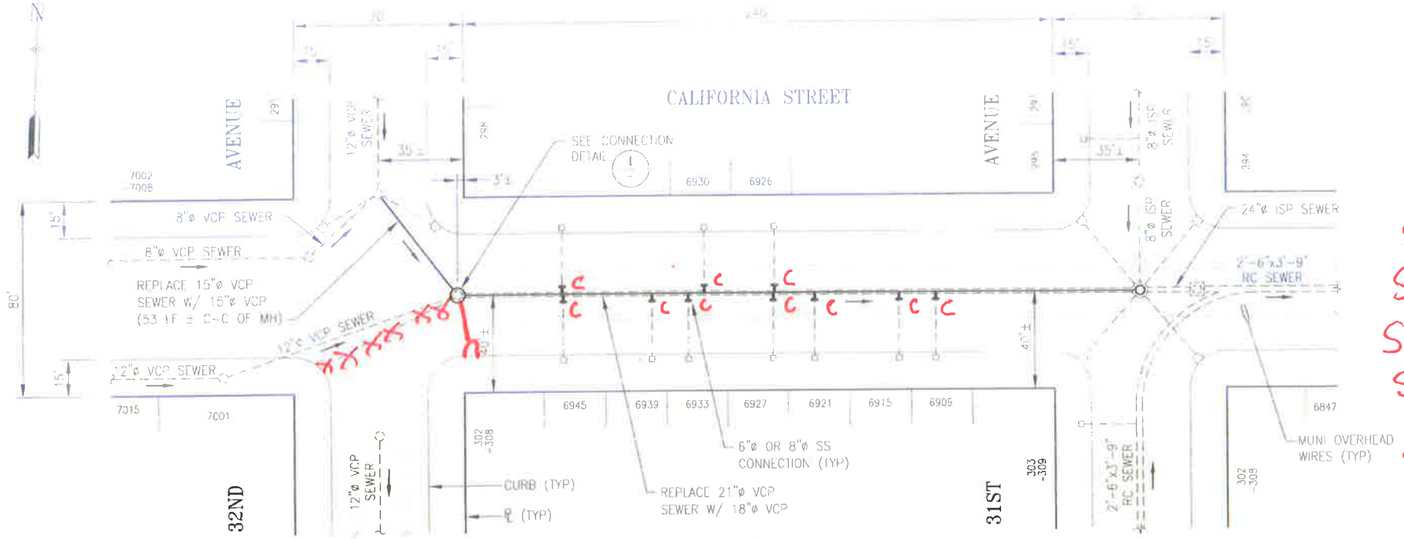

PLAN
SCALE: 1"=30'

SW3 = 1 EA
SW8 = 274LF
SW18 = 10 EA
SW 19 = 17 EA
SW7 = 49LF

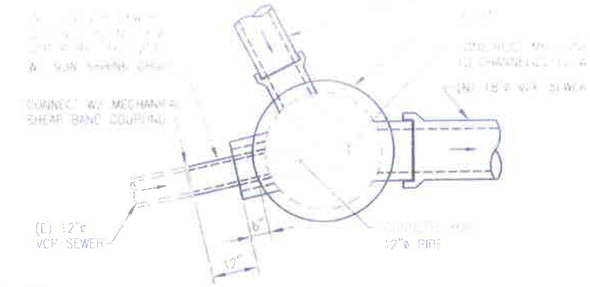

MH CONNECTION DETAIL 1

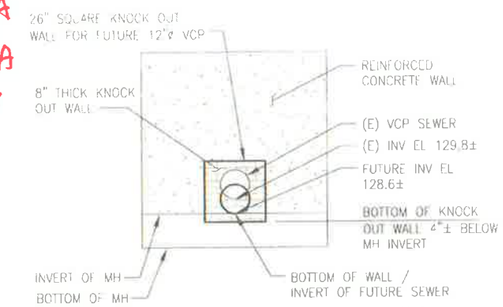

KNOCK OUT WALL DETAIL 2
SW-17

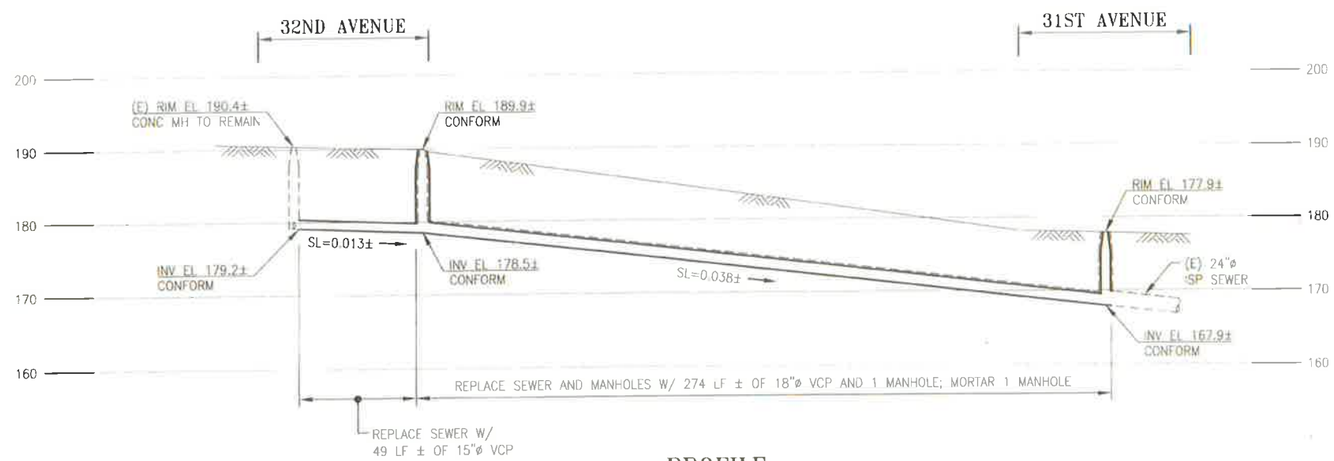

PROFILE
SCALE: HORIZ 1"=30'
VERT 1"=10'

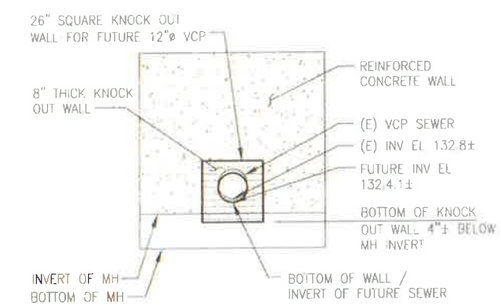

KNOCK OUT WALL DETAIL 3
SW-17

30' 0 30' 60' HORIZONTAL SCALE: 1"=30'
10' 0 10' 20' VERTICAL SCALE: 1"=10'

SEWER SIZED BY B.A. BK
APPROVED BY B.S. BS

NO.	DATE	DESCRIPTION	BY	APP.

TABLE OF REVISIONS

REFERENCE INFORMATION & FILE NO. OF SURVEYS
A-6732
A-993
BK-035_PG-054
P2-002
P2-007

SEAL OF THE CITY AND COUNTY OF SAN FRANCISCO

SAN FRANCISCO PUBLIC WORKS

DESIGN & ENGINEERING
CITY & COUNTY OF SAN FRANCISCO
SAN FRANCISCO PUBLIC WORKS
30 VAN NESS AVENUE, 5TH FLOOR
SAN FRANCISCO, CA 94102 - 6028

		Date
Section Mgr	LESLEY WONG	4/26/18
Deputy Bureau Mgr	IQBAL DHAPA	4/27/18
Bureau Mgr	PATRICK RIVERA	4/27/18

DESIGNED: J.KUNG BK DATE: 4/2018
DRAWN: S.HUEY SH DATE: 4/2018
CHECKED: J.HELMUTH DATE: 4/2018

REGISTERED PROFESSIONAL ENGINEER JOHN T. HELMUTH No. C69542 CIVIL STATE OF CALIFORNIA 4/24/18

SCALE: AS NOTED
SHEET OF SHEETS 65 OF 89

VARIOUS LOCATIONS PAVEMENT RENOVATION NO. 37 AND SEWER REPLACEMENT

CALIFORNIA STREET SEWER REPLACEMENT
31ST AVENUE TO 32ND AVENUE
PLAN, PROFILE AND DETAILS

CONTRACT NO. 2792J
DRAWING NO SW-15
FILE NO. 110,003
REV. NO. 0

HYD JOB ORDER NUMBER 2963J