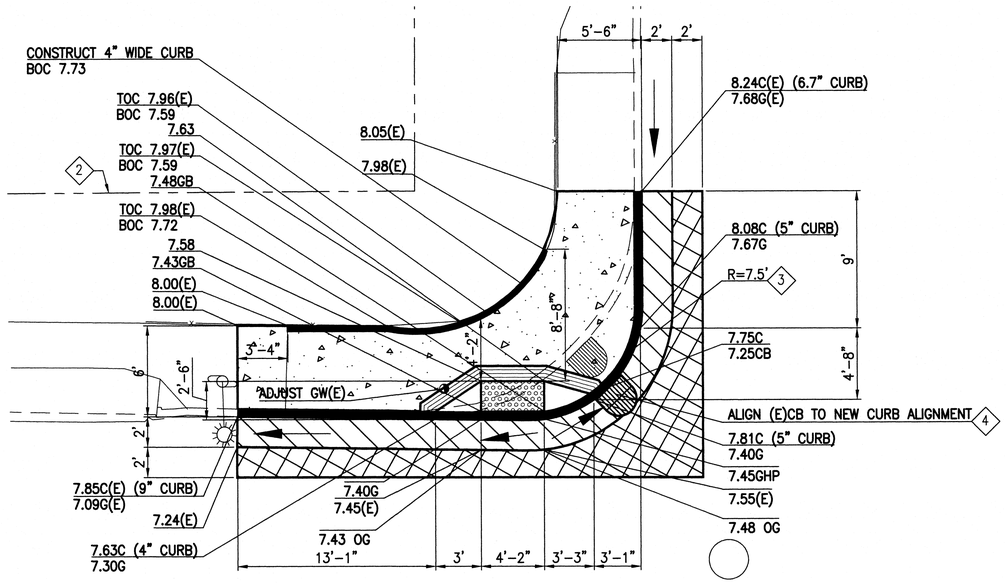

VERMONT STREET

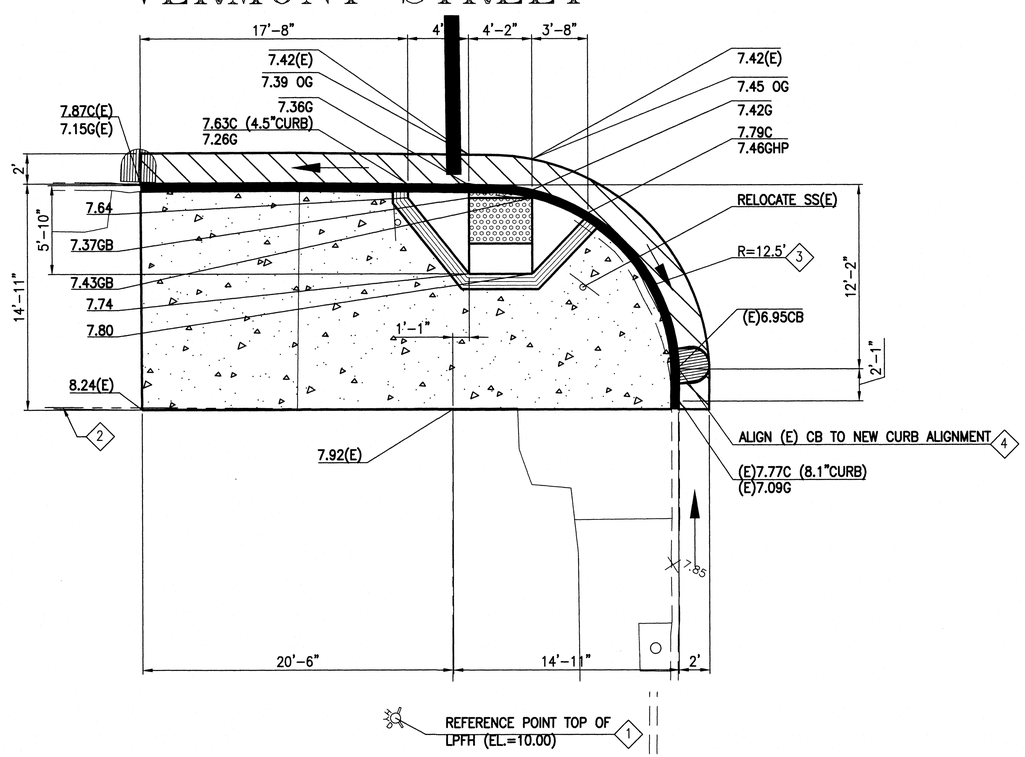

DIVISION STREET

SLB

NOTES:

1. TOPOGRAPHIC SURVEY PERFORMED BY TELAMON ENGINEERING CONSULTANTS, INC. IN OCTOBER, 2017 USING AN ASSUMED HORIZONTAL AND VERTICAL DATUM, SEE REFERENCE POINT ON TOP OF LPFH (EL=10.00) AT THE SOUTHWESTERN CORNER OF THE INTERSECTION OF DIVISION STREET AND HENRY ADAMS STREET.
2. PROPERTY LINE IS APPROXIMATE AND BASED ON THE LATEST GRADE MAP INFORMATION OBTAINED FROM THE CITY & COUNTY OF SAN FRANCISCO DEPARTMENT OF PUBLIC WORKS (SFDPW) WEBSITE: "HTTP://BSM.SFDPW.ORG/SUBDIVISION/KEYMAP/."
3. FACE OF CURB RADIUS AS NOTED.
4. ADJUST CB GRATE HORIZONTALLY TO NEW CURB ALIGNMENT.

5 0 5 10
SCALE: 1" = 5'

AECOM
300 California Street, Suite 600
San Francisco, Ca 94104
Tel: 415-796-8100
Fax: 415-796-8200

NO.	DATE	DESCRIPTION	BY	APP.

TABLE OF REVISIONS
THIS DRAWING WAS LAST MODIFIED: 04/23/18 18:25, BY: joseph.burg

REFERENCE INFORMATION & FILE NO. OF SURVEYS

SEAL OF THE CITY AND COUNTY OF SAN FRANCISCO

SAN FRANCISCO PUBLIC WORKS

DESIGN & ENGINEERING
CITY & COUNTY OF SAN FRANCISCO
SAN FRANCISCO PUBLIC WORKS
30 VAN NESS AVENUE, 5TH FLOOR
SAN FRANCISCO, CA 94102 - 6028

		Date:
Section Mgr:	Eric T. Kelley	5/16/18
Deputy Division Mgr:		5/16/18
Division Mgr:	PATRICK RIVERA	5/16/18

DESIGNED: A. EHSAEI	DATE: 04/18
DRAWN: B. CARPENTER	DATE: 04/18
CHECKED: T. SWEET	DATE: 04/18

REGISTERED PROFESSIONAL ENGINEER THOMAS M. SWEET No. C 58265 EXP. 06/30/18 CIVIL STATE OF CALIFORNIA

SCALE: 1" = 5'

SHEET OF SHEETS 36 OF 89

VARIOUS LOCATIONS PAVEMENT RENOVATION NO. 37 AND SEWER REPLACEMENT

VERMONT STREET AND DIVISION STREET CURB RAMP DETAILS

EHY JO NO. 2963J

CONTRACT NO. 2792J

DRAWING NO. CR-13

FILE NO. 109,975

REV. NO.

Xrefs: T:\SFDPW Various Locations 37 (2792J)\Plan\XC-2792J-BOE Title Block.dwg
T:\SFDPW Various Locations 37 (2792J)\Plan\XC-TOPO DIVISION AND VERMONT.dwg
T:\SFDPW Various Locations 37 (2792J)\Plan\Redesign Vermont and Division\XC-DESIGN DIVISION AND VERMONT-RECOMMENDATIONS FOR CALTI

Dimension Scale: 5
Model Units: Undefined

Drawing Path: T:\SFDPW Various Locations 37 (2792J)\Sheet\CR-13.dwg, Login: joseph.burg
Plot Time: Mon, 23 Apr 2018 - 7:11pm
Measurement Units are English