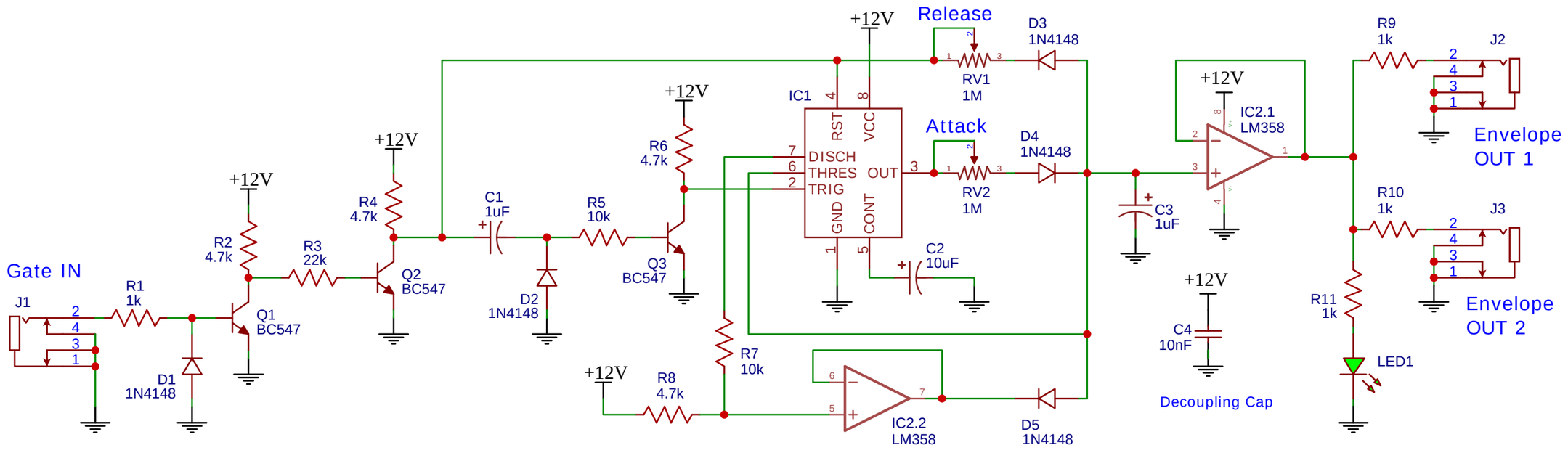

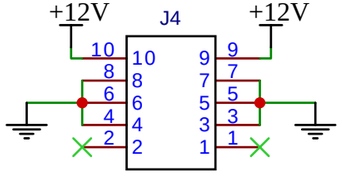

Power Supply

Based on "The Fastest Envelope in the West" by René Schmitz

TITLE: Envelope Generator III		REV: 0.1
EasyEDA	Company: Bumm Bumm Garage	Sheet: 1/1
	Date: March 2021 Drawn By: Steffen	