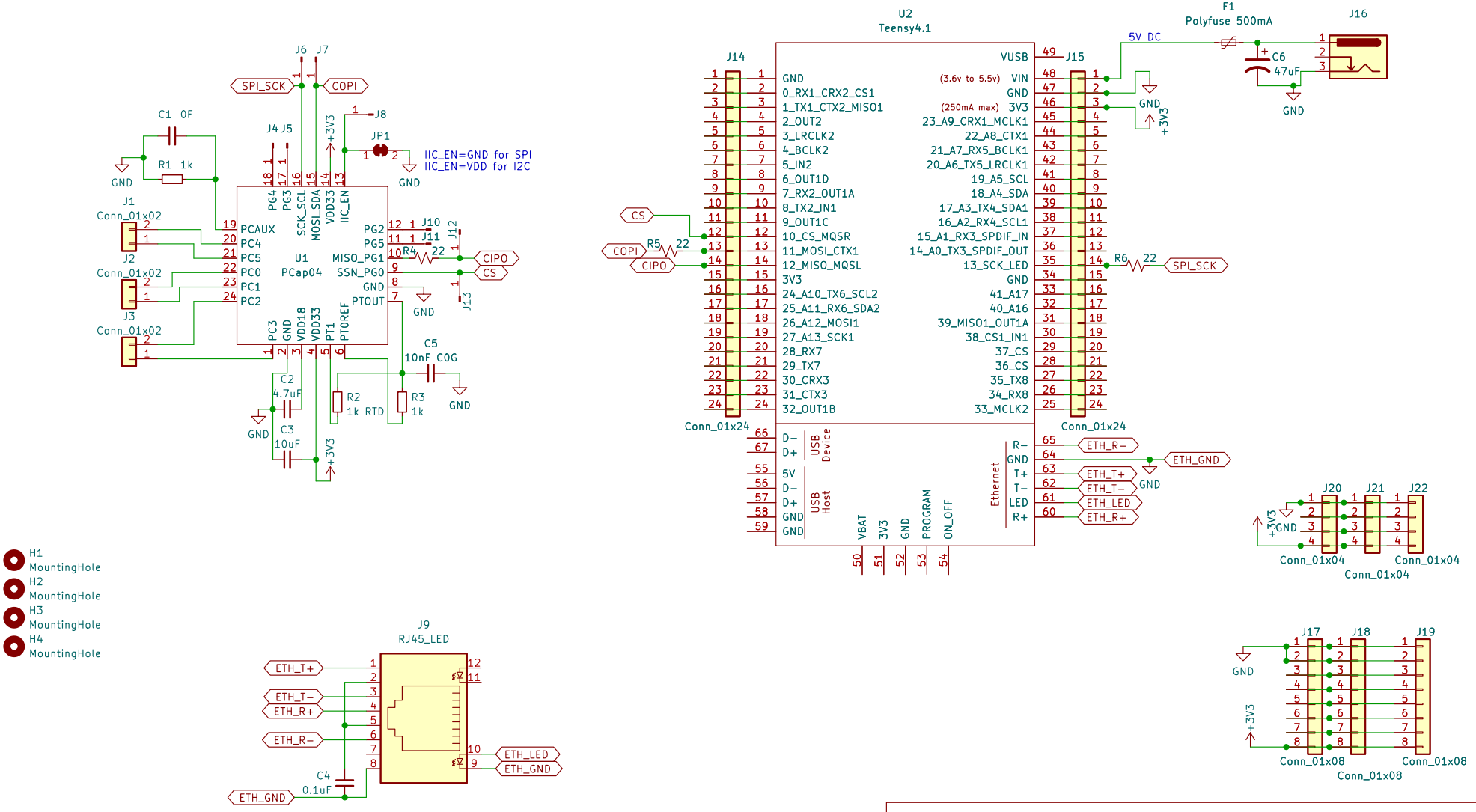

Sheet: /
File: TeensyPicoCap4.kicad_sch

Title:

Size: A4	Date:	Rev:
KiCad E.D.A. kicad (6.0.7)		Id: 1/1